REVISIONS			
REV.	ECN No	DESCRIPTION	DATE
2	1617	RELEASED PRODUCT M.WELLS	05/09/2022

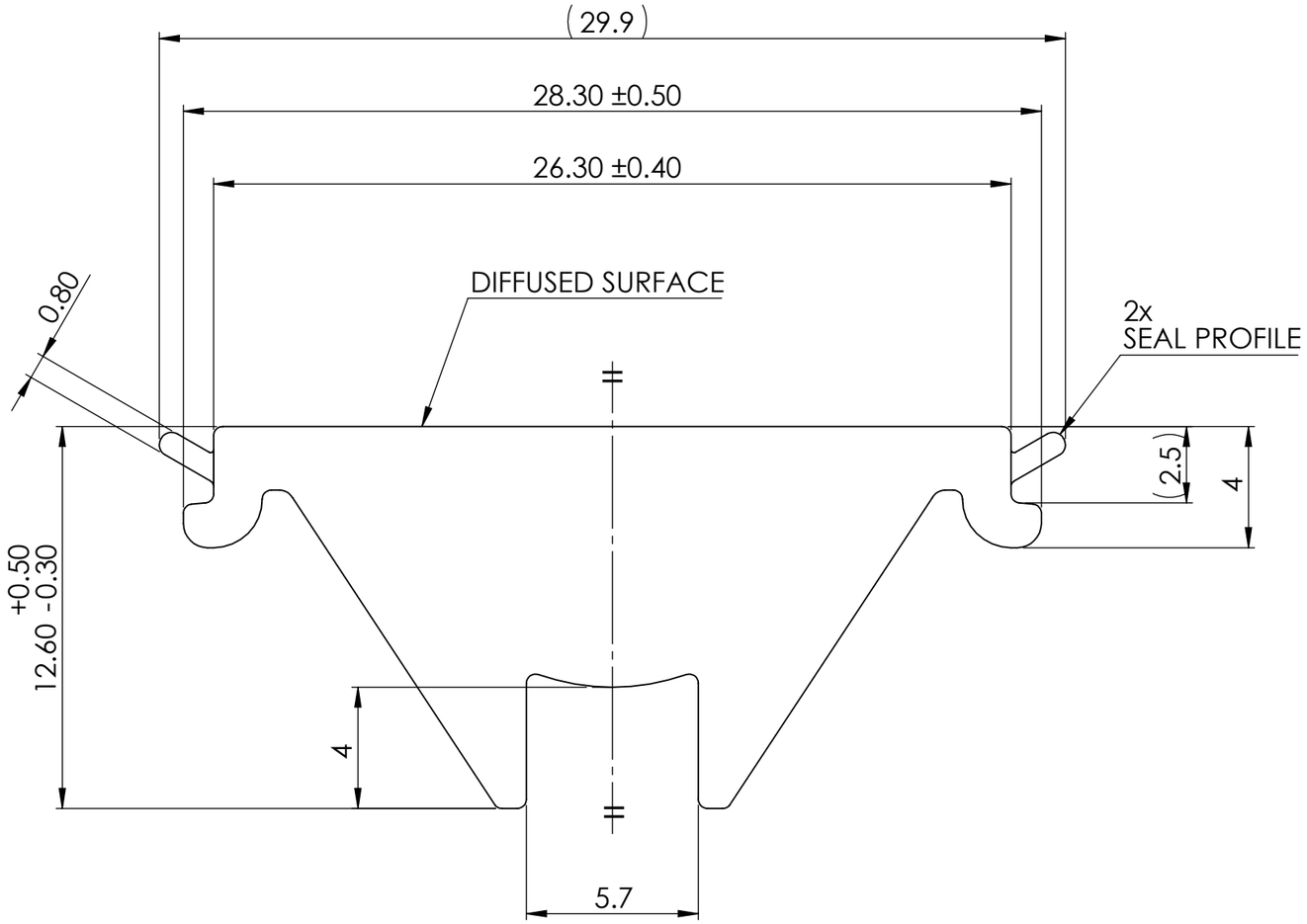

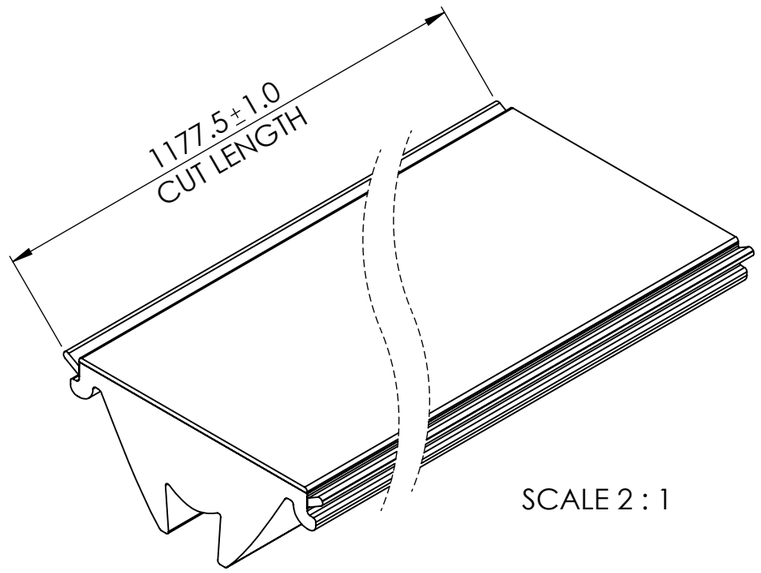

NOTES:

1 - MATERIALS:
OPTIC BODY; POLYCARBONATE, UV STABILIZED, UL 94 HB
SEAL PROFILE; TPE, UV RESISTANT

2 - FINISH: OPTICAL SURFACES ARE OPTICALLY POLISHED.

3 - OVERALL PART SIZE, FORM & POSITION = SEE 2D CAD FILE.

4 - APPROX MASS 236.1 GRAMS/1000mm

5 - CRITICAL TO QUALITY DIMENSIONS (X.XX) ARE FOR INSPECTION
THEORETICALLY EXACT DIMENSIONS [X.XX] TO ISO 1101
AUXILIARY DIMENSIONS (X.XX) ARE FOR INFORMATION ONLY

CUSTOMER DRAWING

SHEET 2 OF 2

carclo Optics
Unit 6-7 Faraday Road
Rabans Lane Industrial Area,
Aylesbury, HP19 8RY, UK.
Tel: +44(0) 01753 575 011
sales@carclo-optics.com www.carclo-optics.com

Title	EXTRUDED OPTIC, WALL GRAZER - 1200				
Drawn by	M WELLS	Customer	CARCLO	Scale	5:1
THIRD ANGLE PROJECTION	GENERAL TOLERANCES UNLESS OTHERWISE STATED DIN16941-2A	CARCLO Optics CONFIDENTIAL: UNAUTHORISED COPYING, DISCUSSION & DISTRIBUTION PROHIBITED	DIMENSION IN mm	Format Size	A3
			CAD File	60152 Rev2 WG0037	
			Part N°	60152	Project N° P00880