E/P pressure regulator, Series ED07

R414000778

- Robust poppet valve technology
- Very high control precision and dynamics
- Suitable for a wide range of applications
- High air flow rates
- ED07 supports different types of connectivity from Analog Version to Fieldbus connection via EtherCAT

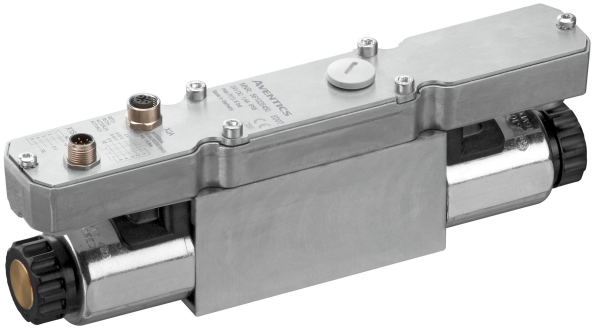

AVENTICS ED07 Dynamic Direct Acting Pressure Regulator

The AVENTICS Series ED07 offers proportional pressurization and the exhaust valves are controlled separately to deliver dynamic control for the most demanding applications.
Highly dynamic proportional pressure regulator
Stackable with base plate
Nominal width 7
Flow 1300 l/min
Pressure range -1 ... 20 bar
EtherCAT, AES fieldbus connection

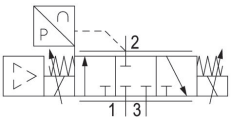

Technical data

Type	Voltage control with actual output value
Control	Directly controlled
Control	Analog
Function	Air exhaust
Output signal	Analog Switch output
Operational voltage DC	24 V
Max. current consumption	1400 mA
Actual output value	0 ... 10 V
Nominal input value	0 ... 10 V
Min. regulation range	0 bar
Max. regulation range	16 bar
Min. working pressure	0.5 bar
Max. working pressure	18 bar
Hysteresis	0,04 bar
Medium	Compressed air
Nominal flow Qn	1300 l/min
Min. ambient temperature	5 °C
Max. ambient temperature	50 °C
Min. medium temperature	5 °C

E/P pressure regulator, Series ED07

R414000778

Max. medium temperature	50 °C
Protection class	IP65
Permissible ripple	5%
Max. particle size	50 µm
Max. oil content of compressed air	1 mg/m³
Type	Poppet valve
Mounting orientation	α = 0 ... 90° ±β = 0 ... 90°
Certificates	CE declaration of conformity
Electrical connection type	Plug
Electrical connection size	M12
Electrical connection number of poles	5-pin
Signal connection	input and output
Signal connection	Socket
Signal connection	M12
Signal connection	5-pin
Industry	Industrial
Weight	2.05 kg

Material

Housing material	Die-cast aluminum Steel, chrome-plated
Seal material	Hydrogenated acrylonitrile butadiene rubber
Part No.	R414000778

Technical information

With oil-free, dry air, other installation positions are possible on request.

The protection class is only ensured when the plug is mounted properly. For detailed information, see operating instructions.

Minimum working pressure = 0.5 bar + max. required secondary pressure

Additional pressure setting ranges available on request

The min. control pressure must be adhered to, since otherwise faulty switching and valve failure may result!

The pressure dew point must be at least 15 °C less than ambient and medium temperature and may not exceed 3 °C.

The oil content of compressed air must remain constant during the life cycle.

Use only the approved oils from AVENTICS. Further information can be found in the “Technical information” document (available in https://www.emerson.com/en-us/support).

Dimensions

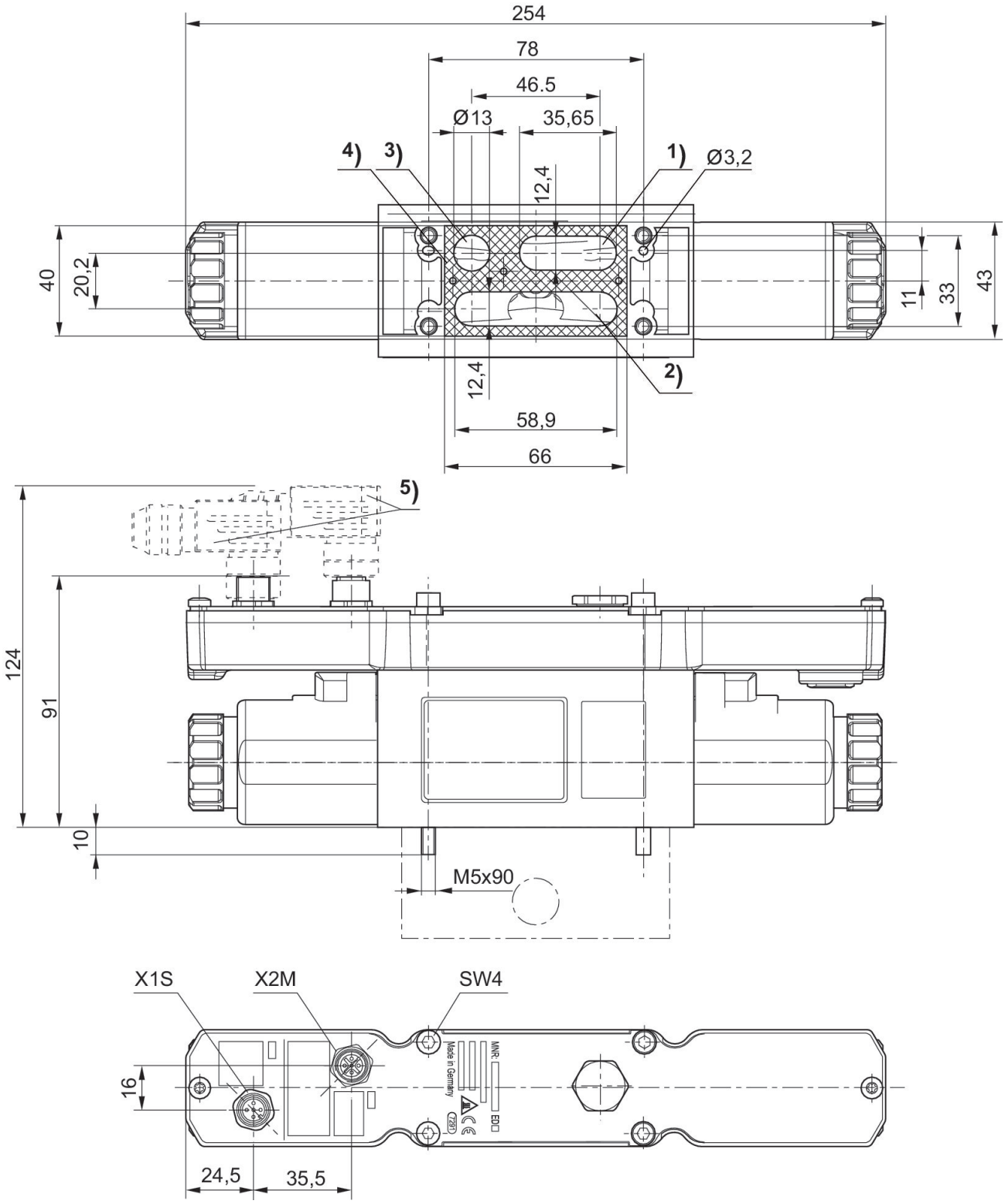

1) Operating pressure
2) Working pressure
3) Exhaust
4) Profile seal
5) Accessories not supplied

Mounting orientation

β = ±0...90°

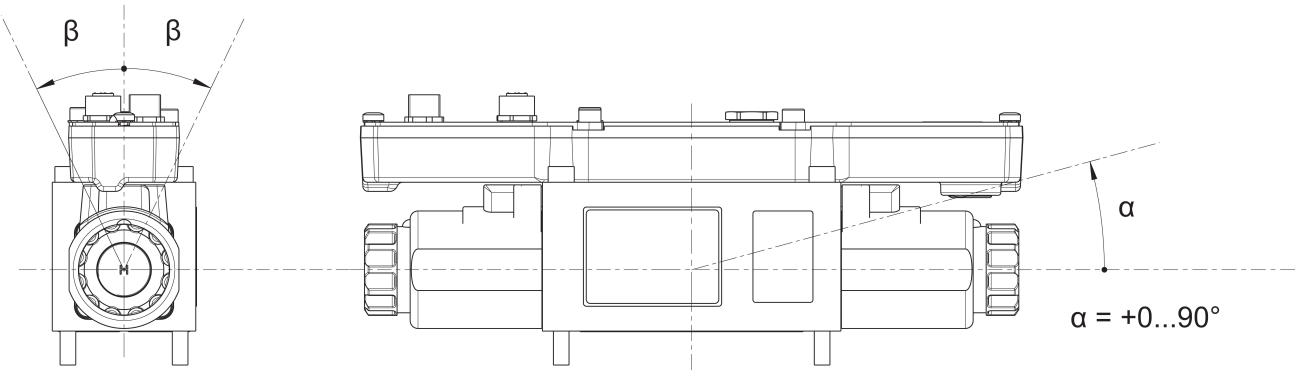

Functional diagram

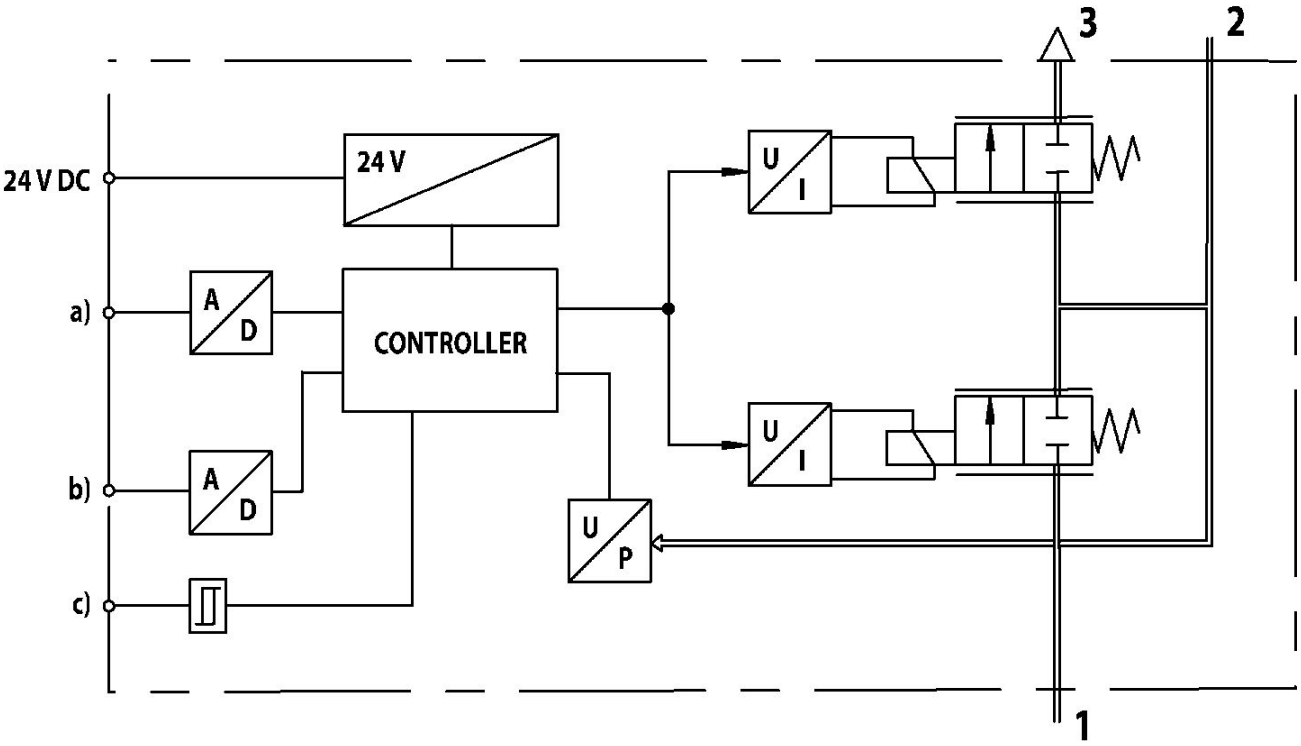

a) Nominal input value b) Actual output value c) Switch output (acknowledge signal) The E/P pressure control valve modulates the pressure corresponding to an analog electrical nominal input value.
1) Operating pressure
2) Working pressure
3) Exhaust

Characteristic and pin assignment for voltage control with actual output value

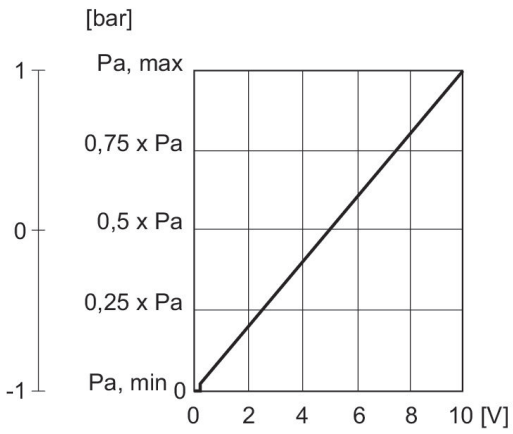

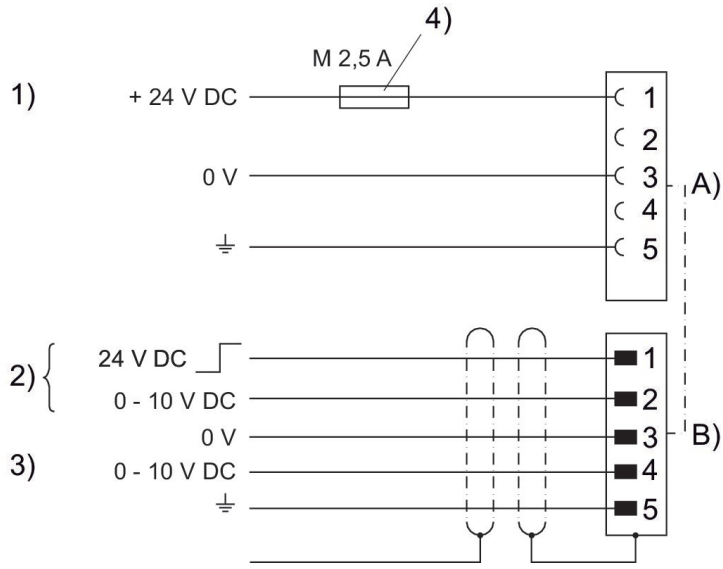

1) Supply Voltage
2) Switch output (pin 1) and nominal value (pin 2) are related to 0 V.
3) Actual value (pin 4) is related to 0 V (min. load resistance 1 kΩ).
4) The operating voltage must be protected by an external M 2.5 A fuse. Connect plug X2M via a shielded cable to ensure EMC. A) Plug X1S B) Plug X2M

Flow diagram

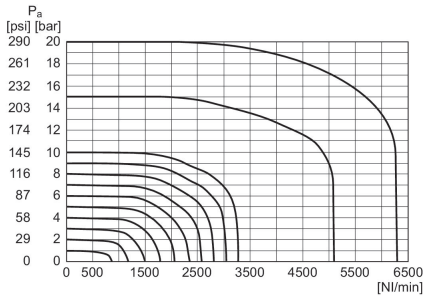

Pa = Working pressure