TRACO POWER

AC/DC Medical Power Supply

TMF 05 Series, 5 Watt

- **Fully encapsulated power supplies in plasic casing for PCB mount**
- **Certification according to IEC/EN/ES 60601-1 3rd edition for 2xMOPP**
- **Risk management process according to ISO 14971 incl. risk management file**
- **Acceptance criteria for electronic assemblies acc. to IPC-A-610 Level 3**
- **Low leakage current <100 µA rated for BF applications**
- **Operating temperature range: −25°C to +70°C max.**
- **Protection against short-circuit, over load and over voltage**
- **Protection class II prepared**
- **5-year product warranty**

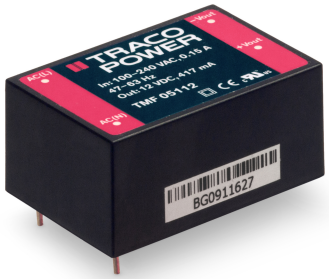

ES 60601-1 IEC 60601-1

The TMF 05 Series AC/DC power supply modules are designed and manufactured based on workmanship standards and risk management to comply with the requirements for quality, reliability and safety of medical equipment. The units are approved to IEC/EN/ES 60601-1 edition 3.1 for 2 x MOPP (Means Of Patient Protection) and come along with an ISO 14971 risk management file. These fully encapsulated modules are for PCB mount. They are designed for protection class II applications (no earth connection) and feature a low leakage current (<100 µA). A compact design and excellent EMC considerations facilitate the design in. The thermal management enables an operation within a wide temperature range of -25 to +70°C and the isolation system is designed and approved for an altitude of 5000 m (AMSL). This makes the power supplies suitable not only for stationary applications but also for transportable medical equipment.

Models

Order Code	Output Power max.	Output Voltage nom.	Output Current max.	Efficiency typ.
TMF 05105	5 W	5 VDC	1'000 mA	77 %
TMF 05112		12 VDC	417 mA	82 %
TMF 05115		15 VDC	333 mA	82 %
TMF 05124		24 VDC	208 mA	82 %

Input Specifications

Input Voltage	- AC Range	Operational Range:	90 - 264 VAC (Full Range)
		Rated Range:	100 - 240 VAC (Full Range)
	- DC Range	Operational Range:	120 - 370 VDC (Designed for, no certification)
		Polarity:	+DC: L / –DC: N
Input Frequency		Operational Range:	47 - 440 Hz
		Certified:	50/60 Hz
Input Current	- Full Load & Vin = 230 VAC		80 mA max.
	- Full Load & Vin = 115 VAC		150 mA max.
Power Consumption	- No load & Vin = 230 VAC		100 mW max. (Ready to meet ErP directive)
	- No load & Vin = 115 VAC		100 mW max.
Input Inrush Current	- At 230 VAC		20 A max.
	- At 115 VAC		10 A max.
Recommended Input Fuse			(The need of an external fuse has to be assessed in the final application.)

Output Specifications

Voltage Set Accuracy			±2% max.
Regulation	- Input Variation (Vmin - Vmax)		0.5% max.
	- Load Variation (0 - 100%)		1% max.
Ripple and Noise (20 MHz Bandwidth)		5 VDC model:	100 mVp-p max.
		12 VDC model:	120 mVp-p max.
		15 VDC model:	150 mVp-p max.
		24 VDC model:	240 mVp-p max.
Capacitive Load		5 VDC model:	8'000 µF max.
		12 VDC model:	1'200 µF max.
		15 VDC model:	820 µF max.
		24 VDC model:	330 µF max.
Minimum Load			Not required
Temperature Coefficient			±0.05 %/K max.
Hold-up Time	- At 230 VAC		90 ms min.
	- At 115 VAC		20 ms min.
Short Circuit Protection			Continuous, Automatic recovery
Output Current Limitation			160 - 240% of Iout max.
Overvoltage Protection			105 - 145% of Vout nom. (By Zener diode)

Safety Specifications

Safety Standards	- Medical Equipment	EN 60601-1 IEC 60601-1 ANSI/AAMI ES 60601-1 CSA-C22.2, No 60601-1 2 x MOPP (Means Of Patient Protection)
	- Certification Documents	www.tracopower.com/overview/tmf05
Protection Class		Class I & II (Prepared): Reinforced Insulation
Pollution Degree		PD 2
Over Voltage Category		OVC II

EMC Specifications

EMI Emissions		EN 60601-1-2 edition 4 (Medical Devices)
	- Conducted Emissions	EN 55011 class B (internal filter)
	- Radiated Emissions	EN 55011 class B (internal filter)

All specifications valid at nominal voltage, resistive full load and +25°C after warm-up time, unless otherwise stated.

EMS Immunity			EN 61000-6-2 (Generic Industrial)
			EN 60601-1-2 edition 4 (Medical Devices)
	- Electrostatic Discharge	Air:	EN 61000-4-2, ±15 kV, perf. criteria A
		Contact:	EN 61000-4-2, ±8 kV, perf. criteria A
	- RF Electromagnetic Field		EN 61000-4-3, 3 V/m, perf. criteria A
	- EFT (Burst) / Surge		EN 61000-4-4, ±2 kV, perf. criteria A
		L to L:	EN 61000-4-5, ±1 kV, perf. criteria A
		L to PE:	EN 61000-4-5, ±2 kV, perf. criteria A
	- Conducted RF Disturbances		EN 61000-4-6, 3 Vrms, perf. criteria A
	- PF Magnetic Field	Continuous:	EN 61000-4-8, 30 A/m, perf. criteria A
	- Voltage Dips & Interruptions	230 VAC / 50 Hz:	EN 61000-4-11
			30%, 25 periods, perf. criteria A
			>95%, 0.5 periods, perf. criteria A
			>95%, 1 period, perf. criteria A
			>95%, 250 periods, perf. criteria A
		115 VAC / 60 Hz:	EN 61000-4-11
			30%, 25 periods, perf. criteria A
			>95%, 0.5 periods, perf. criteria A
			>95%, 1 period, perf. criteria A
			>95%, 250 periods, perf. criteria A

General Specifications

Relative Humidity		95% max. (non condensing)
Temperature Ranges	- Operating Temperature	−25°C to +70°C
	- Storage Temperature	−40°C to +85°C
Power Derating	- High Temperature	4 %/K above 55°C
	- Low Input Voltage	2 %/V below 100 VAC
	See application note:	www.tracopower.com/overview/tmf05
Cooling System		Natural convection (20 LFM)
Altitude During Operation		5'000 m max.
Switching Frequency		40 - 140 kHz (PWM)
		66 kHz typ. (PWM)
Insulation System		Reinforced Insulation
Working Voltage (rated)		250 VAC
Isolation Test Voltage	- Input to Output, 60 s	4'000 VAC
Leakage Current	- Touch Current	100 µA max.
Reliability	- Calculated MTBF	450'000 h (MIL-HDBK-217F, ground benign)
Washing Process		Not allowed
Housing Material		Plastic resin (UL 94 V-0 rated)
Potting Material		Silicone (UL 94 V-0 rated) (Hermetical sealed structure, dust-proof only non water-proof)
Pin Material		Brass
Pin Surface Plating		Tin (120 µm min.), matte
Housing Type		Plastic Case
Mounting Type		PCB Mount
Connection Type		THD (Through-Hole Device)
Weight		30 g
Environmental Compliance	- REACH Declaration	www.tracopower.com/info/reach-declaration.pdf
		REACH SVHC list compliant
		REACH Annex XVII compliant
	- RoHS Declaration	www.tracopower.com/info/rohs-declaration.pdf
		Exemptions: 7c-I
		(RoHS exemptions refer to the component concentration only, not to the overall concentration in the product (O5A rule). The SCIP number is provided on request.)

All specifications valid at nominal voltage, resistive full load and +25°C after warm-up time, unless otherwise stated.

Supporting Documents

Overview Link (for additional Documents) www.tracopower.com/overview/tmf05

Outline Dimensions

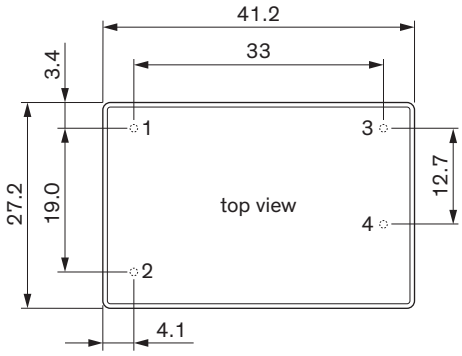

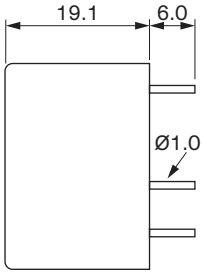

Dimensions in mm
Tolerances ±0.5 mm
Pin tolerances ±0.1 mm

Pinout	
Pin	**Function**
1	AC (L)
2	AC (N)
3	–Vout
4	+Vout

© Copyright 2023 Traco Electronic AG Specifications can be changed without notice.