Notes: (Unless Otherwise Specified)

1. Waterproof Rate: IP68.
2. Recommend Panel Thickness: 0.8 to 8.0 mm.
3. Recommend Torque: 19~20 kgf-cm.
4. Mating Cap P/N: 125-7928
5. RoHS Compliant.

REV	ECN#	DESCRIPTION OF REVISION	DRAW BY DATE	CHECK BY DATE	APPROVE BY DATE
01			Lucas 01/07/15	Lucas 01/07/15	Ray 01/07/15

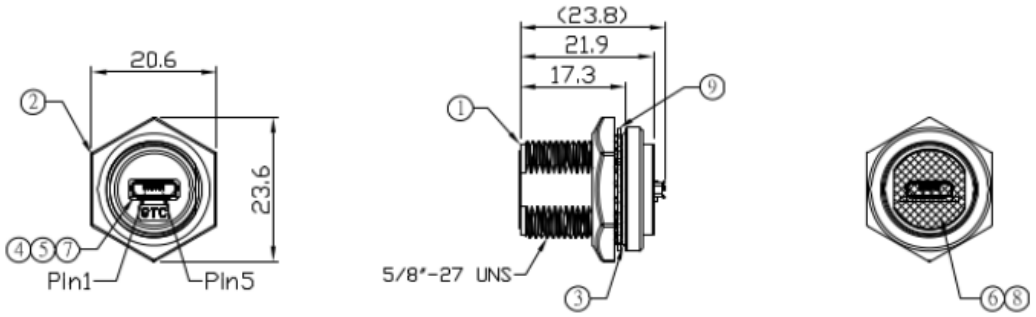

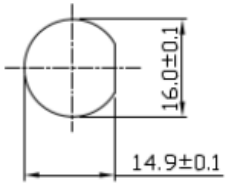

Front View
Recommend
Panel Cut-Out

Item	Part Name	Material / Finish	Q'ty
9	Metal Washer	Stainless Finish: —	1
8	Glue	Epoxy Color: Black	
7	EMI Shielded Plate	Copper Alloy Finish: Ni Plated	1
6	Molding	PVC Color: Black	1
5	PCB	FR-4 Color: —	1
4	Micro USB-AB Receptacle	Housing: Thermoplastic, Color: Black Contacts: Copper Alloy, Finish: Au Plated Shell: Copper Alloy, Finish: Ni Plated	2
3	O-Ring	Silicone Color: Red	1
2	Hex Nut	Zn Alloy Finish: Ni Plated	1
1	Housing	Zn Alloy Finish: Ni Plated	1

TITLE
Micro USB-AB Metal C2 Panel Jack Screw With Micro USB-AB Coupler

REV. 01

DO NOT SCALE DRAWINGS	B	1:1	Lucas 01/07/15	Lucas 01/07/15	Ray 01/07/15	X.X ± 0.5 X.XX ± 0.2 X.XXX ± 0.05 ANGLES ± 1°	mm	1/1
THIRD ANGLE PROJECTION	SIZE	SCALE	DRAW / DATE	CHECK / DATE	APPROVE / DATE	TOLERANCES	UNIT	SHEET

RS Stock No
122-3020