Features

- Adjustable joint key
- Stainless steel with RFID TAG inside
- Many safety applications
- Key for Interlocking devices conforming to EN ISO 14119 for the control of movable guards, without guard locking function.

RS PRO Limit Switches

RS Stock No.: 0847954

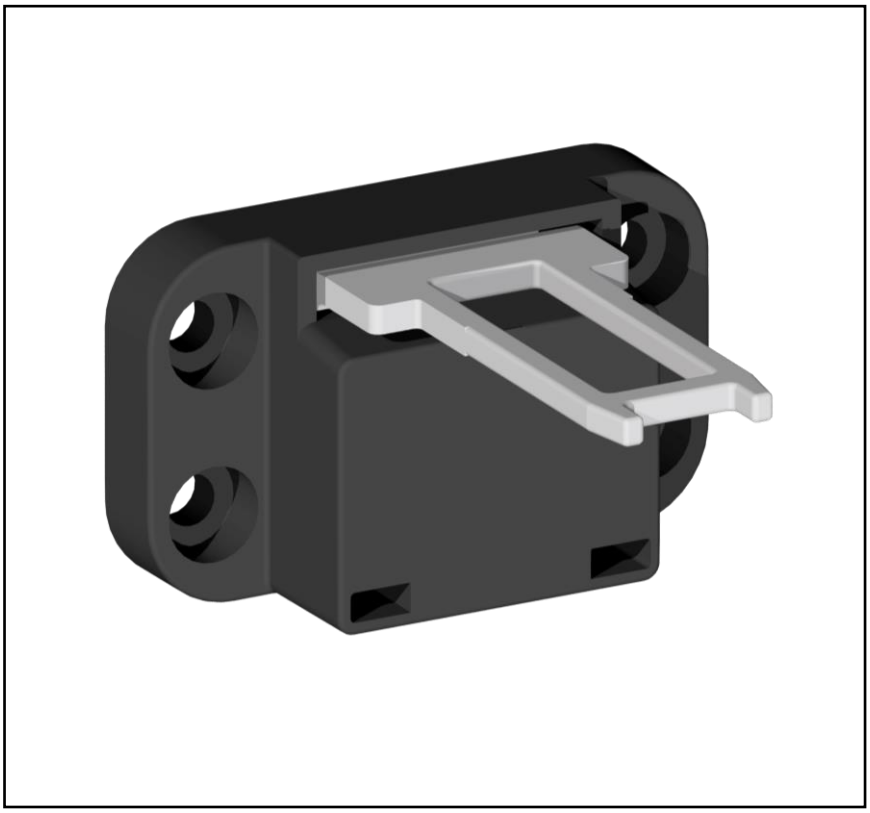

RS PRO is the own brand of RS. The RS PRO Seal of Approval is your assurance of professional quality, a guarantee that every part is rigorously tested, inspected, and audited against demanding standards. Making RS PRO the Smart Choice for our customers.

Product Description

Electromagnetic device with separated actuator, represents a reliable and actual solution as interlocking device with guard. This electromagnetic safety switch is controlled by a solenoid, which is able to block the actuator and act as safety interlock, in order to prevent the access to the protected area up to the persistence of the dangerous situation.

General Specifications

Actuator	Key
Type of actuator	Adjustable joint key with RFID TAG inside
Materials	Stainless steel and thermoplastic
Mounting	Four fixing holes
Info	Possible to purchase replacement actuators, pairing procedures is described on the instruction sheet. In case of new actuator pairing, the older will not work anymore

Mechanical Specifications

Dimensions	52x52 h31
Weight	40g

Operation Environment Specifications

Maximum Operating Temperature	55°C
Minimum Operating Temperature	-25°C
Storage Temperature	-30°C to 80°C

Limit Switches

Classification

eCl@ss Version	-
UNSPSC Version	-

Approvals

Compliance/Certifications	CE

Similar Products

Parameters	Stock#	Stock#	Stock#	Stock#
Brand	RS RPO	RS RPO	RS RPO	RS RPO
Actuator Type				
Pole and Throw Configuration				
Normal State Configuration				
Contact Type				
Position Indicator				
Operating Speed				
Output Type				
Maximum Current				
Maximum AC Voltage				
Maximum DC Voltage				
Frequency				
Connection Type				
Terminal Type				
Switches				
Contact Resistance				
Rated Insulation Voltage				
Impulse Withstand Voltage				
Insulation Resistance				
Operating Force				
Mounting Orientation				
Cable Length				
Dimensions				
Length				
Width				
Depth				

Shaft				
Mechanical Life (Minimum)				
Contact Gap				
Weight				
Maximum Operating Temperature				
Minimum Operating Temperature				
Shock Resistance				
Vibration Resistance				
IP Rating				
Class of Protection Against Electric Shock				
Standards Met				
Hazardous Area Certification				

Accessory parts

Plastic Electromagnetic interlocking device RFID coded	FEPMKR1FR3-024E
Plastic Electromagnetic interlocking device RFID coded with rear release button 60mm	FEPMKR1FR3-024E-A60
8 poles PVC cable with M12 female connector	144 7660

CONSTRACTIONAL/SCHEMATIC DIAGRAMS / INSTALLATION METHODS / ILLUSTRATIONS