## Features

- Painted zamak
- Three cable inlet
- Many safety applications
- 90° turnable head with separated actuator
- Interlocking devices conforming to EN ISO 14119 for the control of movable guards, without guard locking function.

# RS PRO Limit Switches

**RS Stock No.: 0860353**

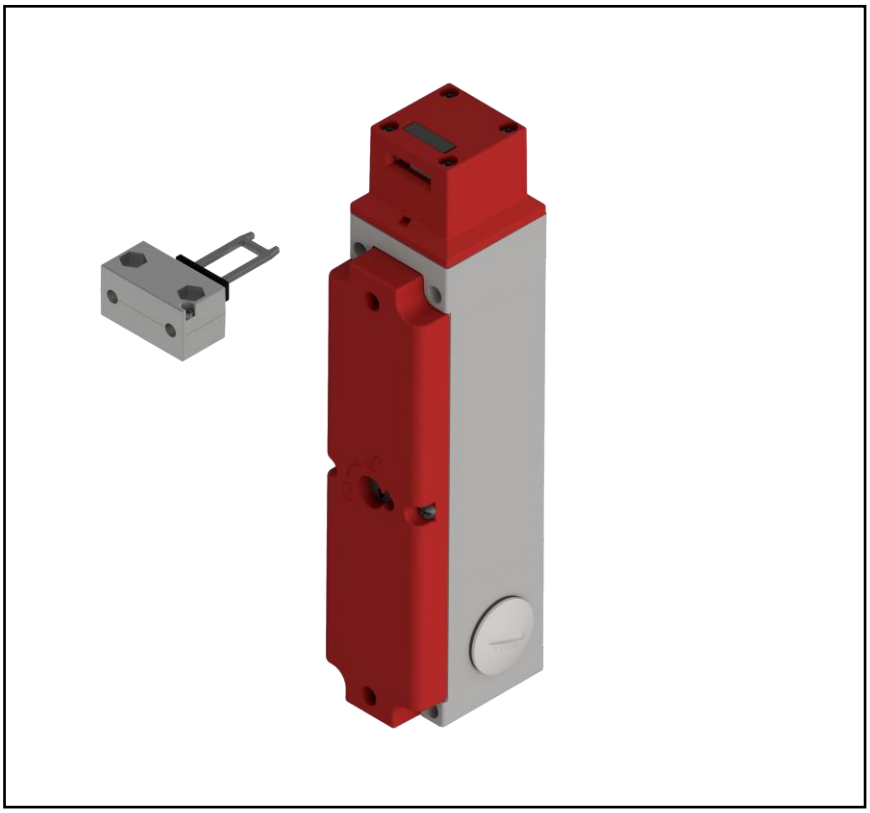

RS PRO is the own brand of RS. The RS PRO Seal of Approval is your assurance of professional quality, a guarantee that every part is rigorously tested, inspected, and audited against demanding standards. Making RS PRO the Smart Choice for our customers.

## Product Description

*Electromagnetic device with separated actuator, represents a reliable and actual solution as interlocking device with guard. This electromagnetic safety switch is controlled by a solenoid, which is able to block the actuator and act as safety interlock, in order to prevent the access to the protected area up to the persistence of the dangerous situation.*

## General Specifications

| | |
|---|---|
| **Actuating Head** | Separated actuator (Key included) |
| **Head orientation** | 0° standard |
| **Normal State Configuration** | Actuator: 1NC Solenoid: 1NO+2NC |
| **Principle of operation** | Electrical interlock |
| **Contact Type** | Non-overlapping slow action contacts |
| **Colour** | Gray-Red |
| **Applications** | Various |
| **Interlock type according to EN ISO 14119** | Type 2 |
| **Encoding level according to EN ISO 14119** | Low |
| **Solenoid power supply** | 24V AC/DC |
| **Auxiliary release** | By safety screw |

| **Materials** | |
|---|---|
| **Housing Material** | Zamak |
| **Head Material** | Zamak |
| **Actuator** | Steel |

# Limit Switches

## Electrical Specifications

| | |
|---|---|
| **Output Type** | Analogue |
| **Rated Insulation Voltage Ui** | 250V (pollution degree3) |
| **Impulse Withstand Voltage Uimp** | 2.5KV |
| **Contact rating according to UL 508** | B300 Q300 |
| **Conventional thermal current in free air Ith (θ min 40 ° C)** | 10A |
| **Operating currents Ie - AC-15 (50-60 Hz) according to IEC 60947-5-3** | 24V - 10A / 230V - 4A |
| **DC-13 operating currents according to IEC 60947-5-1** | 24V - 4A |
| **Resistance Between Contacts** | 25 mOhm |

## Mechanical Specifications

| | |
|---|---|
| **Switching Frequency** | 600 cycles/hour |
| **Maximum switching speed** | 20 m/min |
| **Connecting Terminals** | M3 screw with cable clamp (+,-) pozidriv 1 |
| **Connecting Cables Dimensions** | 0.34 … 1.5 mm2 |
| **Electrical connections** | Three threaded cable inlets for M20x1.5 cable glands |
| **Min. actuating force (extraction)** | 15N (30N) |
| **Retention force** | 2000N |
| **Dimensions** | 40x190 h50 |
| **Weight** | 1Kg |
| **Mechanical Life (millions of operations)** | 1 |
| **B10d (millions of operations)** | 4 |

## Operation Environment Specifications

| | |
|---|---|
| **Maximum Operating Temperature** | 55°C |
| **Minimum Operating Temperature** | -25°C |
| **Storage Temperature** | -30°C to 80°C |

## Protection Category

| | |
|---|---|
| **IP Rating** | IP65 – IP67 |
| **Class of Protection Against Electric Shock** | Class II |

## Classification

| | |
|---|---|
| **eCl@ss** Version | - |
| **UNSPSC** Version | - |

## Approvals

| | |
|---|---|
| **Compliance/Certifications** | CE - cULus - CCC |
| **Standards Met** | IEC 60947-5-1, EN 60947-5-1 |

## Similar Products

| Parameters | Stock# | Stock# | Stock# | Stock# |
|---|---|---|---|---|
| **Brand** | RS RPO | RS RPO | RS RPO | RS RPO |
| **Actuator Type** | | | | |
| **Pole and Throw Configuration** | | | | |
| **Normal State Configuration** | | | | |
| **Contact Type** | | | | |
| **Position Indicator** | | | | |
| **Operating Speed** | | | | |
| **Output Type** | | | | |
| **Maximum Current** | | | | |
| **Maximum AC Voltage** | | | | |
| **Maximum DC Voltage** | | | | |
| **Frequency** | | | | |
| **Connection Type** | | | | |
| **Terminal Type** | | | | |
| **Switches** | | | | |
| **Contact Resistance** | | | | |
| **Rated Insulation Voltage** | | | | |
| **Impulse Withstand Voltage** | | | | |
| **Insulation Resistance** | | | | |
| **Operating Force** | | | | |
| **Mounting Orientation** | | | | |
| **Cable Length** | | | | |
| **Dimensions** | | | | |
| **Length** | | | | |
| **Width** | | | | |
| **Depth** | | | | |
| **Shaft** | | | | |
| **Mechanical Life (Minimum)** | | | | |
| **Contact Gap** | | | | |
| **Weight** | | | | |
| **Maximum Operating Temperature** | | | | |
| **Minimum Operating Temperature** | | | | |
| **Shock Resistance** | | | | |
| **Vibration Resistance** | | | | |
| **IP Rating** | | | | |
| **Class of Protection Against Electric Shock** | | | | |
| **Standards Met** | | | | |
| **Hazardous Area Certification** | | | | |

## Accessory parts

| | |
|---|---|
| **Bent key** | KEY25 |
| **Flat key** | KEY26 |
| **Bent shock-absorbing key** | KEY27 |
| **Flat shock-absorbing key** | KEY28 |
| **Adjustable plastic joint key** | KEY29 |
| **Adjustable metal joint key** | KEY29M |

## CONSTRACTIONAL/SCHEMATIC DIAGRAMS / INSTALLATION METHODS / ILLUSTRATIONS