SICK.COM

DATA SHEET

PP4-C108110000000

Device columns
Mounting systems

Sensor Intelligence

MOUNTING SYSTEMS

PP4-C108110000000

ORDERING INFORMATION

Type	part no.
PP4-C108110000000	2139646

Further device versions and accessories at www.sick.com/Device_columns

DETAILED TECHNICAL DATA

FEATURES

Description	PP4 protective column for mounting suitable variants of the deTec and deTem product families. Protects the devices from mechanical influences from three sides.
Mounting system type	Mechanical anchoring to the floor
Items supplied	PP4 device column with pre-assembled alignment plate and removable end cap Base plate with spirit level, fine alignment wheel and setscrews M8 screws and washers for mounting the alignment plate on the base plate Alignment clamp Operating instructions for download
Column height	1,084.5 mm
Suitable for device variants	
deTec safety light curtain	Protective field height ≤ 750 mm
deTem safety light-beam sensor	3 beams, distance of lowest beam from floor: 200 mm
Compatible brackets	
FlexFix	✓
Flat-Mount	✓ [1]
Swivel-Mount	✓ [1]
Additional options	Enables additional accessories, such as muting arms, to be installed.
Muting sensor protection left (2140187)	✓
Muting sensor protection right (2140186)	✓
Muting arm adapter (2140086)	✓
Height of first beam above ground	200 mm

[1] The flat mount and swivel mount brackets are attached at the top and bottom of the device. A correspondingly higher column must therefore be selected for installation.

FUNCTIONS

Alignment	The complete alignment process involves leveling the base plate and rotating the alignment plate at the foot of the column.
Alignment aid mark (–45°, 0°, 45°)	✓
Fine alignment wheel	✓

Setscrews for leveling	✓
Spirit level	✓
Cable entry	✓

MECHANICS

Material	
Column profile	Aluminum (powder-coating)
Alignment plate	Aluminum (powder-coating)
Base plate	Aluminum (powder-coating)
Fine alignment wheel	PA6
Alignment clamp	PA6
End cap	ABS
Dimensions	See dimensional drawing
L1	1,024 mm [1]
L2	1,084.5 mm [2]
Cross-section of column profile	101.6 mm x 81 mm
Diameter of base plate	195 mm
Weight	5.58 kg

[1] L1 = Column profile height.

[2] L2 = Column height (incl. base plate, alignment plate and end cap).

AMBIENT DATA

Storage temperature	–30 °C ... +70 °C

DIMENSIONAL DRAWING PP4 PROTECTIVE COLUMN

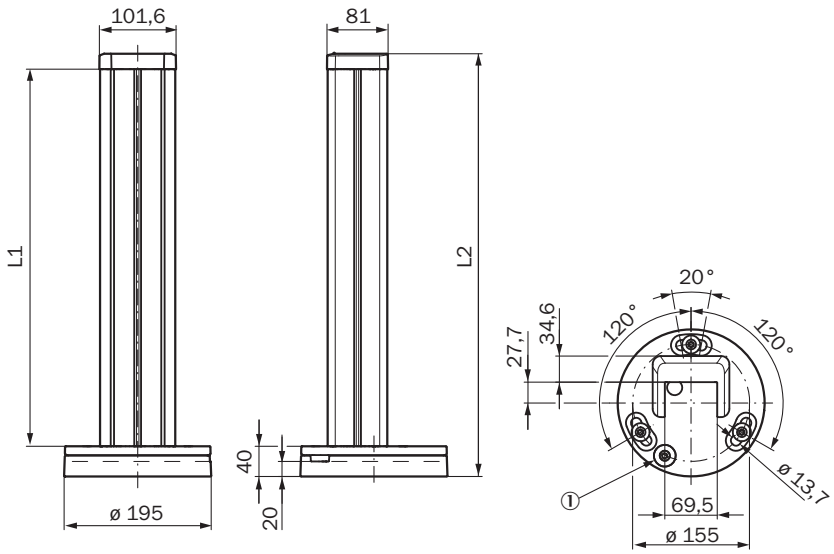

Dimensions in mm (inch)
① Fine alignment wheel

Type	Part no.	L1 = Column profile height	L2 = Column height (incl. base plate, alignment plate and end cap)
PP4-C098110000000	2139645	924	984,5
PP4-C108110000000	2139646	1024	1084,5
PP4-C118110000000	2139647	1124	1184,5
PP4-C128110000000	2139649	1224	1284,5
PP4-C141110000000	2139650	1350	1410,5

Type	Part no.	L1 = Column profile height	L2 = Column height (incl. base plate, alignment plate and end cap)
PP4-C156110000000	2139651	1500	1560,5
PP4-C171110000000	2139652	1650	1710,5
PP4-C186110000000	2139653	1800	1860,5
PP4-C201110000000	2139654	1950	2010,5
PP4-C216110000000	2139655	2100	2160,5
PP4-C231110000000	2139656	2250	2310,5

Further information as well as suitable accessories, example applications and downloads such as CAD dimensional models, operating instructions and software can be found at www.sick.com/2139646

SICK AG
WALDKIRCH
GERMANY
SICK.COM

SICK AT A GLANCE

SICK is a leading global technology company for intelligent sensors and integrated solutions in industrial automation. Our technologies set benchmarks, making your industrial processes more efficient, safer and more sustainable – both in logistics and manufacturing operations.

SICK combines sensor intelligence with industry expertise and certified consulting services. We provide the ideal foundation for scalable as well as tailor-made automation solutions and create added value along the entire value chain. Our close partnerships with our customers are more than just a promise: Together, we optimize productivity, improve quality, protect health and safety, and help build a sustainable future. All with empathy and trust.

Since 1946, we have been developing innovative technologies with passion and a pioneering spirit. With a global network in around 40 countries, SICK has a global presence and is always close by. The company's headquarters are located in Waldkirch near Freiburg, Germany. Our customers benefit from our understanding of both local and global requirements, which enables us to deliver tailor-made solutions

SICK
Sensor Intelligence