Power Switch

0.5A 125V AC Qualified Type

SDKN Series

RoHS compliant

Compact and low-profile for primary/secondary switching with compatibility to low level rating.

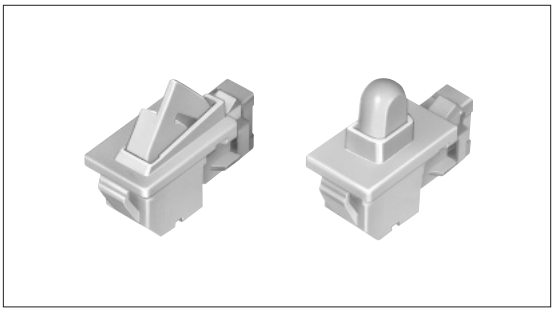

Product Line

Circuit arrangement	Rating	Total travel (mm)	Operating force	Mounting method	Operation type	Minimum order unit (pcs.)	Product No.	Drawing No.
SPDT	0.5A 125V AC 0.25A 250V AC 5mA 5V DC	9	3.5±1N	Snap-in	Push	1,250	SDKNA20600	1
		9.7	2±1.5N		Lever		SDKNA20700	2

Packing Specifications

Bulk

Number of packages (pcs.)		Export package measurements (mm)
1 case /Japan	1 case /export packing	
250	1,250	389×276×380

Notes

1. Safety standard approval must be obtained as a set.
2. Please place purchase orders per minimum order unit N (integer).

Dimensions

Unit:mm

No.	Style	Mounting hole dimensions
1	Push 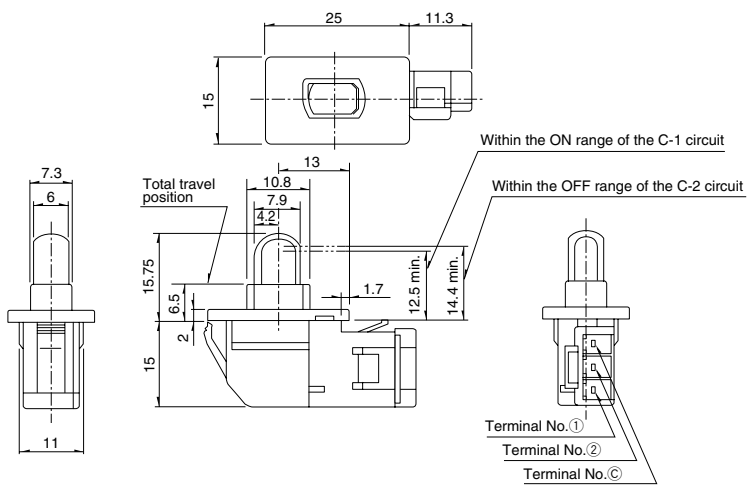	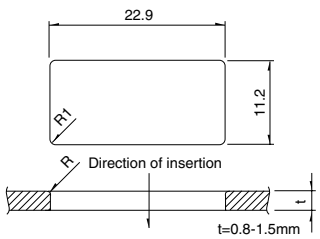

Detector
Push
Slide
Rotary
Encoders
Power
Dual-in-line Package Type
TACT Switch™
Custom-Products
Push Type
Rocker Type
Slide Type
Rotary Type

Dimensions

Unit:mm

No.	Style	Mounting hole dimensions
2	Lever 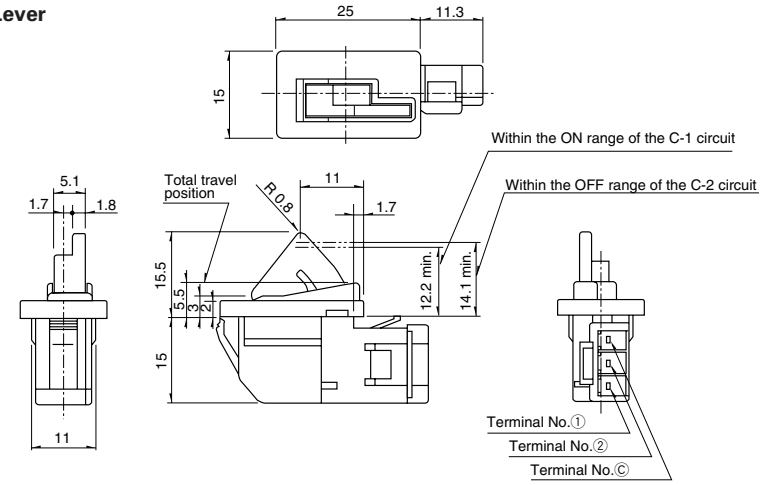	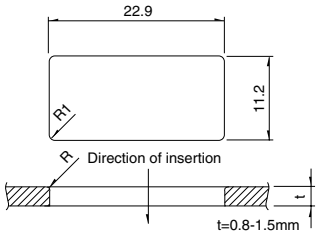

Circuit Diagram

SPDT

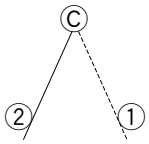

Note

Verify the performance under actual product conditions before use.

Cautions

1. This product does not have a water-proof or drip-proof construction. Prevent ingress of water into the switch. Avoid using around spilt or flowing. It may cause deterioration of the insulation.

2. Do not apply load on the connecter or lead wire (code) attached to the product. Using the product with load applied on the connecter/lead wire might cause terminal wobble or contact failures.

3. ON/OFF signal reading (For DC ratings)
   Shall be considered when designing circuit and software as follows.
   (1) Setting of thresh voltage
   A 4V or larger voltage difference between switch ON and OFF is recommended. Thresh voltage should be set to the center.

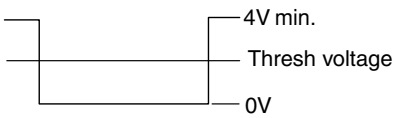

   (2) ON/OFF signal reading
   ON/OFF signal reading intervals should be at a minimum of 50ms with at least 3 repetitions.

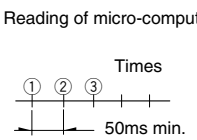

4. Connector corresponds to [HLP-03V], manufactured by the J.S.T. Mfg. Co., Ltd.

List of Varieties

Items \ Type / Series			Push				Rocker	
			SDKN	SDKS	SDKQ	SDKR	SDDJE ※1 ※2	SDDJF ※1 ※2
Photo								
Travel (mm)			9 9.7	14.6	2.5	1.5	3.5	5.2
Remark			———			Water-proof type	———	
Operating temperature range			–20℃ to +60℃	–30℃ to +60℃	–10℃ to +60℃	–10℃ to +85℃	–10℃ to +55℃	
Rating			0.25A 250V AC 0.5A 125V AC 5mA 5V DC	2A 250V AC 4A 125V AC	3A 125V AC	0.5A 250V AC 1A 125V AC	10A 250V AC 6A/96A 250V～	16A 250V AC 16(6)/250～
Electrical performance	Contact resistance		100mΩ max.	50mΩ max.	100mΩ max.			
Electrical performance	Insulation resistance		500MΩ min. 500V DC	100MΩ min. 500V DC	500MΩ min. 500V DC			
Electrical performance	Voltage proof		1,000V AC for 1minute	1,500V AC for 1minute		1,000V AC for 1minute	2,000V AC for 1minute	
Mechanical performance	Terminal strength		50N for 1minute	70N for 1minute	—	5N for 1minute	10N for 1minute	60N for 1minute
Mechanical performance	Actuator strength	Operating direction	20N		100N		25N	
Mechanical performance	Actuator strength	Perpendicular direction	20N	30N	20N		25N	
Mechanical performance	Resistance to soldering heat	Manual soldering	———			300±10℃, 3±0.5s	350±10℃, 3±0.5s	
Mechanical performance	Resistance to soldering heat	Dip soldering	———			260±5℃, 10±1s	※260±10℃, 10±1s	
Durability	Operating life		6,000cycles		12,000cycles	100,000cycles	10,000cycles	
Durability	Operating life		Load : as ratings			Refer to individual product spec.	Load : as ratings	
Environmental performance	Cold		–30±2℃ for 96h	–40±2℃ for 96h	–25±2℃ for 240h	–20±2℃ for 240h	–20±2℃ for 96h	
Environmental performance	Dry heat		85±2℃ for 96h		85±2℃ for 240h		85±2℃ for 96h	
Environmental performance	Damp heat		40±2℃, 90 to 95%RH for 96h		40±2℃, 90 to 95%RH for 240h	60±2℃, 90 to 95%RH for 1000h	40±2℃, 90 to 95%RH for 96h	
Page			240	242	244	245	246	250

- Power Switches Cautions ·····258
- Power Switches Safety Standard ·····259, 260, 261

Notes

1. ※1. Dip soldering can be used on SDDJE For PC board terminal and SDDJF right angle terminal types only.
2. ※2. The operating temperature range for automotive applications can be raised upon request. Please contact us for details.