© – TE Connectivity. All Rights Reserved.

REVISIONS					
P	LTR	DESCRIPTION	DATE	DWN	APVD
	A	ECN–25–358921;GTP	12DEC2025	TP	WILL

NOTES:

ALL DIMENSIONS ARE NOMINAL FOR REFERENCE ONLY UNLESS OTHERWISE STATED.

RoHS: COMPLIANT.

SPECIFICATIONS:
IMPEDANCE: 75Ω

FREQUENCY: DC TO 12GHz

VSWR/RL: 1.065 MAX. / 30 dB MIN.@DC~6GHz
1.433 MAX. / 15 dB MIN.@6~12GHz

INSERTION LOSS: 0.35 dB MAX.

CONTACT RESISTANCE:
CENTER: 6.0 MΩ MAX.
OUTER: 3.0 MΩ MAX.

VOLTAGE RATING: 170 VRMS MAX

DIELECTRIC WITHSTANDING VOLTAGE: 500V MAX

INSULATION RESISTANCE: 5000MΩ

MECHANICAL CHARACTERISTICS
DURABILITY: 500 CYCLES.

ENGAGEMENT AND DISENGAGEMENT FORCE:
ENGAGEMENT: 20 N MAX.
DISENGAGEMENT: 5 N MIN.

ENVIRONMENTAL PARAMETER
TEMPERATURE RANGE: –65°C TO +165°C

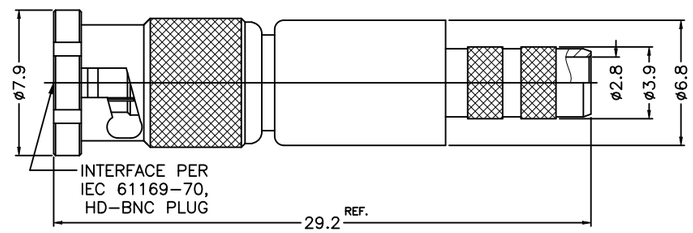

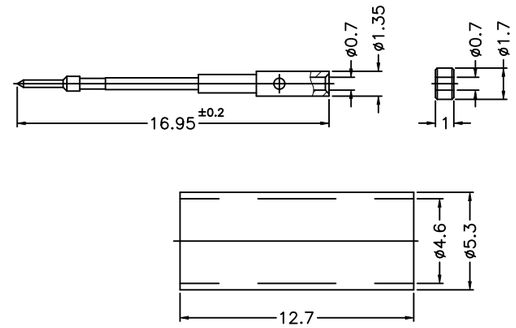

1. CRIMPED FERRULE
HEX CRIMP SIZE .18"
2. CRIMPED CONTACT PIN
SQ. CRIMP SIZE .042"

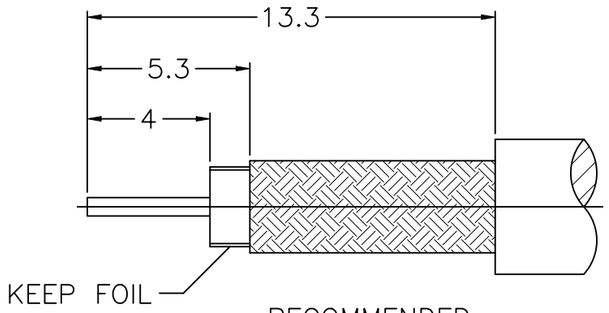

RECOMMENDED
CABLE STRIPPING DIM'S
(FOR BELDEN 1855A, 4855R)

NOTES:
FINISH (PLATING THICKNESS IN MICRO–INCHES)

1 100 MICROINCHES MIN NICKEL PLATED.
50 MICROINCHES MIN OVER COPPER UNDERPLATED
2 3 MICROINCHES MIN GOLD PLATED,
100 MICROINCHES MIN OVER NI–P (WT%10) NICKEL UNDERPLATED.

QUANTITY PER ASSY	FINISH/PLATING	MATERIAL	DESCRIPTION	ITEM
1	NOTE 1	COPPER	FERRULE	11
1	NATURAL	PTFE	INSULATOR	10
1	NOTE 2	PHOSPHOR BRONZE	CONTACT PIN	9
1	NOTE 1	BRASS	SHELL	8
1	NOTE 1	BRASS	WASHER	7
1	NATURAL	SWP 80	SPRING	6
1	NOTE 1	BRASS	RETAINER RING	5
1	BLACK	SILICONE RUBBER	GASKET	4
1	NOTE 1	BRASS	BARREL	3
1	NATURAL	PTFE	INSULATOR	2
1	NOTE 1	BERYLLIUM COPPER	BODY	1
2510961–1				

PARTS LIST

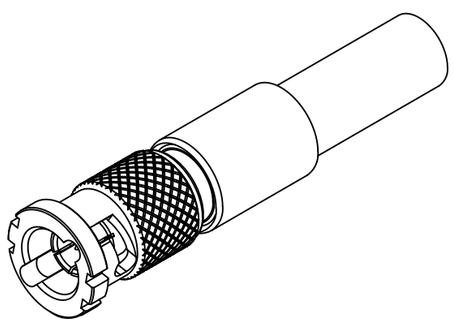

THIS DRAWING IS A CONTROLLED DOCUMENT.

DIMENSIONS: mm

TOLERANCES UNLESS OTHERWISE SPECIFIED:
0 PLC ± 0.3
1 PLC ± 0.2
2 PLC ± 0.1
3 PLC ± 0.05
4 PLC ± –
ANGLES ± 1

MATERIAL: SEE TABLE
FINISH: –

DWN TP 05AUG2025
CHK TP 05AUG2025
APVD WILL 05AUG2025
PRODUCT SPEC –
APPLICATION SPEC –
WEIGHT 4.35 G

TE Connectivity

NAME: High Density BNC Plug St 1855A/4855R Type 75 ohm –

SIZE	CAGE CODE	DRAWING NO	RESTRICTED TO
A3	00779	C–2510961	–

CUSTOMER DRAWING | SCALE 1:1 | SHEET 1 OF 1 | REV A