FIBOX
Enclosing innovations

MNX ABS 125/125 HT

Sample photo

Order symbol:	ABS 125/125 HT	**EAN:**	6418074023124
Product nbr:	6081910	**El. number:**	
Description:	Enclosure, ABS	Finland	3420615
Remarks:	Smoked transparent cover	Denmark	8212023518
		Italy	7362065
		Sweden	2535836

Including: Base with TPE gasket, screws for mounting plate/DIN-rail and cover with polyamide cover screws.

Dimensions:	**L**	**W**	**H**
mm:	130	130	125
inch:	5.1	5.1	4.9

Materials:

Material:	ABS
Gasket material:	TPE
Base colour:	RAL 7035
Cover colour:	Smoked grey
Cover screws material:	Polyamide
Cover screws colour:	Black

Temperatures:

Short term:	-40 ... 80 °C
Continuous:	-40 ... 60 °C
Short term:	-40 ... 175 °F
Continuous:	-40 ... 140 °F

Accessories:

MIV 125	Mounting plate (Galvanized steel)
MIN 10	DIN-15 Mounting rail
MIV 10	DIN-35 Mounting rail
FP A 125/130	Front plate (Aluminium)
HFP 130	Front plate hinge series (2 pcs)
FP 22046	Wall fastening lug (4 pcs)

Rating:

Electrical insulation: Totally insulated
Halogen free (DIN/VDE 0472, Part 815): Yes
Flammability Rating (UL 746 C 5): UL 94 HB
Glow Wire Test (IEC 695-2-1) °C: 650
NEMA Class: NEMA 1, 4, 4X, 6
Ingress Protection (EN 60529): IP 66/67
Impact Resistance (EN 50102): IK 07

Certificates:

Fimko
Europe EN 50298: 1998
Gost R

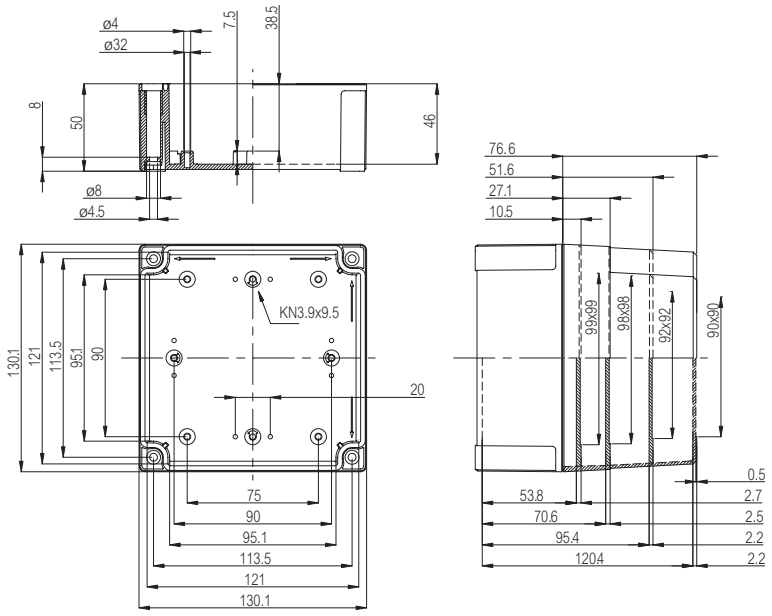

© Fibox Oy, Data subject to change without notice