CAT. E506-A

SMC Rotary One-Touch Fittings

Series KS

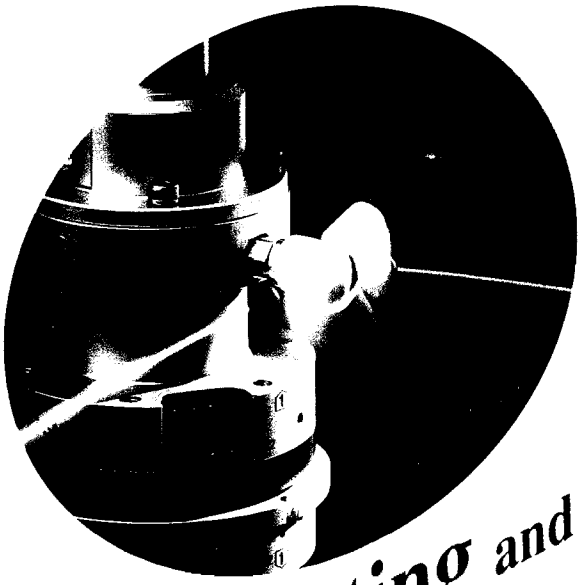

Low-torque rotation type one-touch fittings with bearings for oscillating and rotating sections

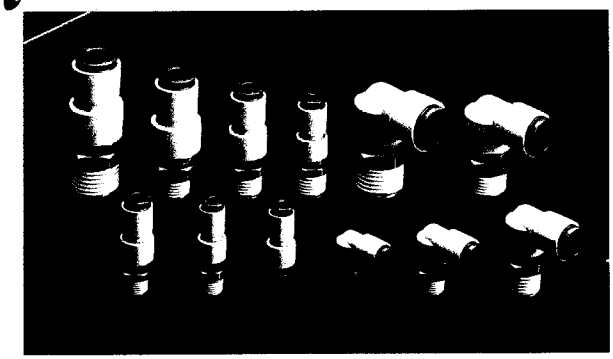

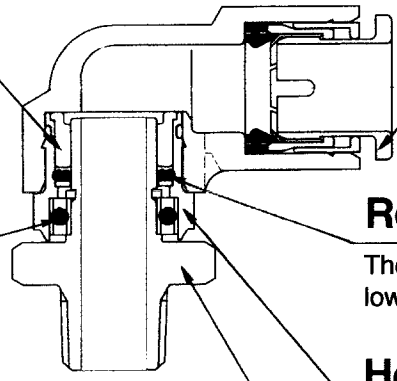

Slide bearing

The oil-containing bearing materialize low-torque low-friction rotation.

Ball bearing

Smooth and low-torque rotation

Cassette

The half union type is equipped with a "tube rotation prevention mechanism."

Rotary seal

The rotary seal in a special shape ensures low-torque low-friction rotation.

Holder

Thanks to the electroless nickel plating, copper will not come in contact with fluid.

Stud

Thanks to the electroless nickel plating, copper will not come in contact with fluid. The threaded section of the standard model is sealed.

28 models of the half union or elbow union type

Model	Connection	Applicable tube O.D.(mm) 4	6	8	10	12
Half union KSH	M5					
	M6					
	1/8					
	1/4					
	3/8					
	1/2					
Elbow union KSL	M5					
	M6					
	1/8					
	1/4					
	3/8					
	1/2					

RS 200-9330 = KSH06-01S . RS 200-9346 = KSL04-M5
RS 200-9368 = KSH06-01S . RS 200-9374 = KSL08-02S

Applicable Tube

Tube material	Nylon, Soft nylon, Polyurethane
Tube O.D.	ϕ4, ϕ6, ϕ8, ϕ10, ϕ12

Specifications

Fluid	Air				
Max. operating pressure	1MPa {10.2kgf/cm²}				
Operating vacuum pressure	-100kPa(10 torr~)				
Proof pressure	3MPa {30.6kgf/cm²}				
Ambient and fluid temperature	0 ~ 60°C				
Number of allowable rotations (rpm)	ϕ4	ϕ6	ϕ8	ϕ10	ϕ12
	500	500	400	300	250
Thread	JIS B0203, JIS B0205				

Principal Element Material

Body — PBT
Stud, holder, guide — C3604BD (With electroless nickel plating)
Chuck, retainer — SUS304
Collet, release bushing, retaining ring — Polyacetal
O-ring, packing, rotary seal — NBR
Slide bearing — Oil-containing polyacetal
Ball bearing — Bearing steel

Precautions

Minimize the load shown below to protect the ball bearing. A flexible polyurethane tube is recommended.

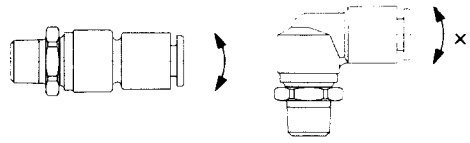

Half union: KSH

<In case of M5, M6>

<In case of R(PT)>

Applicable tube O.D. (mm)	Connection thread	Model	H (Width across flats)	ϕD	L	*A	M	Min. hole dia.	Effective orifice (mm²) Nylon	Effective orifice (mm²) Urethane	Weight (g)
4	M5×0.8	KSH04-M5	8	12.5	36.5	33	16	2.5	4.0	4.0	9
	M6×1.0	KSH04-M6			37	33					
	1/8	KSH04-01S	12		38	34					14
6	M6×1.0	KSH06-M6	8	14.5	38	34	17	3	5.6	5.6	12
	1/8	KSH06-01S	14		39.5	35.5		4	13.4	10.4	17
	1/4	KSH06-02S			42.5	36.5					23
8	1/8	KSH08-01S	17	17.5	44	40	18.5	6	26.1	18.0	23
	1/4	KSH08-02S			47	41					29
	3/8	KSH08-03S			48	41.5					37
10	1/4	KSH10-02S	22	22.5	54	48	21	7	36.3	29.5	55
	3/8	KSH10-03S			55	48.5					63
	1/2	KSH10-04S			57.5	49.5					81
12	3/8	KSH12-03S	24	24.5	57	50.5	22	8	46.1	46.1	75
	1/2	KSH12-04S			60	52					92

* Reference dimensions after R(PT) thread installation.

<In case of M5, M6>

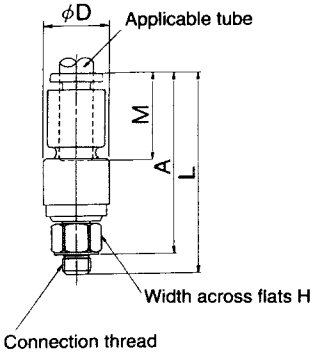

<In case of R(PT)>

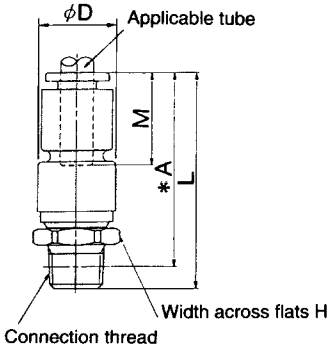

Elbow union: KSL

<In case of M5, M6>

<In case of R(PT)>

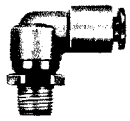

Applicable tube O.D. (mm)	Connection thread	Model	H (Width across flats)	ϕD₁	ϕD₂	L₁	L₂	*A	M	Min. hole dia.	Effective orifice (mm²) Nylon	Effective orifice (mm²) Urethane	Weight (g)
4	M5×0.8	KSL04-M5	8	10.4	12	21	20.5	22	16	2.5	3.5	3.5	9
	M6×1.0	KSL04-M6					21	22					
	1/8	KSL04-01S	12				22	23.5					14
6	M6×1.0	KSL06-M6	8	12.8	14	23	21.5	24	17	3	5.0	5.0	12
	1/8	KSL06-01S	14				23	25.5		4	8.6	8.6	17
	1/4	KSL06-02S					26	26.5					23
8	1/8	KSL08-01S	17	15.2	17	26	26.5	30	18.5	6	21.6	14.9	23
	1/4	KSL08-02S					29.5	31					29
	3/8	KSL08-03S					31	32					38
10	1/4	KSL10-02S	22	18.5	22	31.5	34	37.5	21	7	30.5	25.0	56
	3/8	KSL10-03S					35	38					64
	1/2	KSL10-04S					38	39.5					82
12	3/8	KSL12-03S	24	20.9	24	34	36.5	40.5	22	8	35.1	35.1	76
	1/2	KSL12-04S					39.5	42					93

* Reference dimensions after R(PT) thread installation.

<In case of M5, M6>

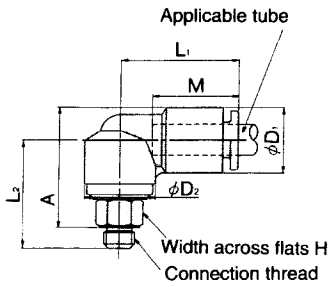

<In case of R(PT)>

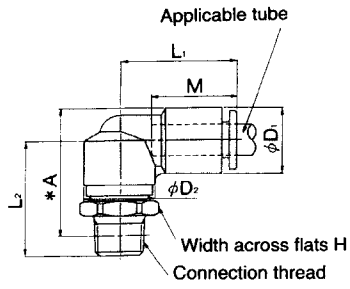

Specifications subject to change without notice.

Printed in Japan.