KEMET Part Number: SN8S-400JA

(UALSN8S400JA00)

KEMET, SN-JA, AC Line Filters, Normal Mode, 46 uH

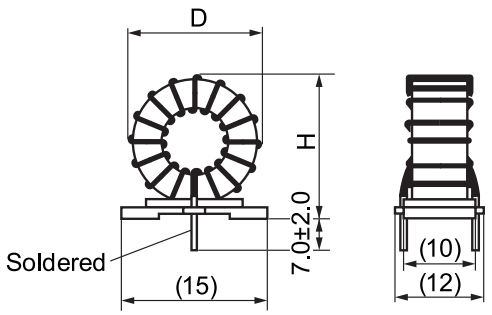

General Information	
Series:	SN-JA
Style:	Through-Hole
RoHS:	Yes
Miscellaneous:	20 (K) Temperature Rise Max.

Specifications	
Inductance:	46 uH (0.1 MHz)
Current:	2 A
Temperature Range:	-25/+105°C
DC Resistance:	52 mOhms

Dimensions	
D	18mm MAX
L	15mm NOM
T	12mm MAX
H	18mm MAX
LL	7mm +/-2mm
S	10mm NOM

Packaging Specifications	
Packaging:	Tray
Packaging Quantity:	600
Weight:	5 g

Statements of suitability for certain applications are based on our knowledge of typical operating conditions for such applications, but are not intended to constitute - and we specifically disclaim - any warranty concerning suitability for a specific customer application or use. This Information is intended for use only by customers who have the requisite experience and capability to determine the correct products for their application. Any technical advice inferred from this Information or otherwise provided by us with reference to the use of our products is given gratis, and we assume no obligation or liability for the advice given or results obtained.

© 2006 - 2019 KEMET