THIS DRAWING IS UNPUBLISHED. RELEASED FOR PUBLICATION -
© COPYRIGHT copyright, dgtc- ALL RIGHTS RESERVED.

LOC	DIST
-	-

REVISIONS

P	LTR	DESCRIPTION	DATE	DWN	APVD
	1	PRELIMINARY	14OCT2013	JY	-
	2	UPDATE MIN PITCH IN BEZEL	25JUN2014	JY	-
	3	ADD NEW PN	26FEB2015	JY	SH

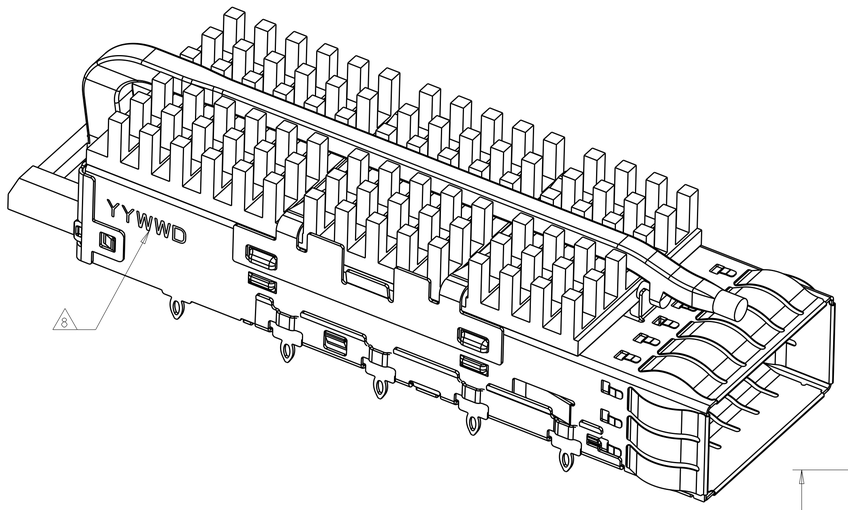

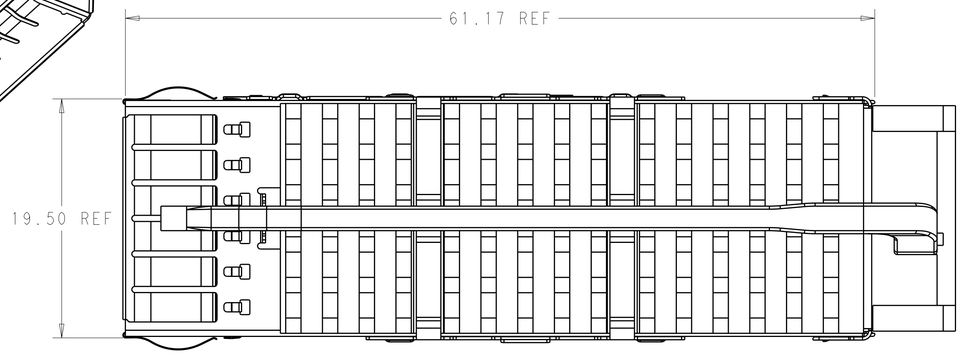

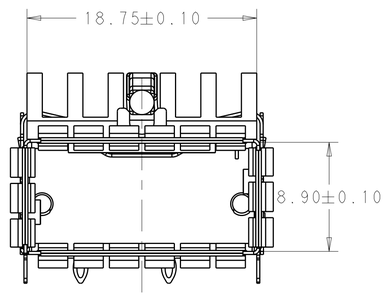

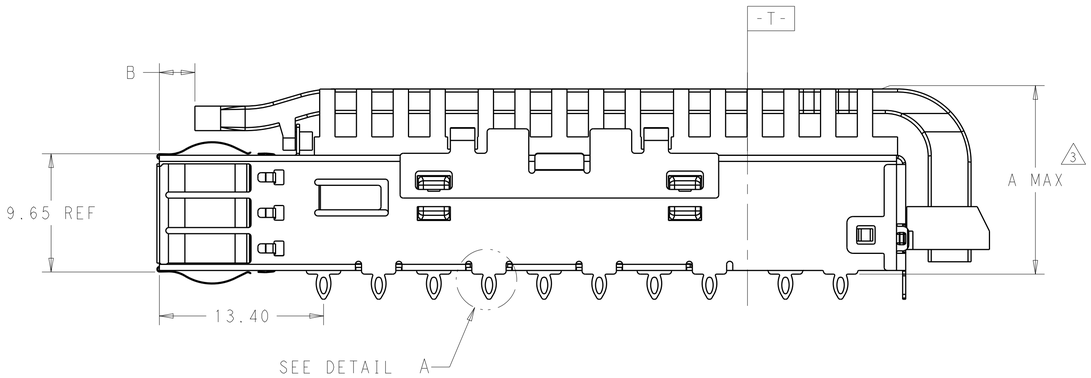

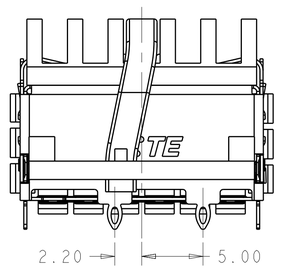

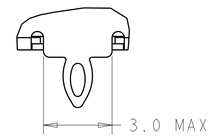

DETAIL A
SCALE 8:1

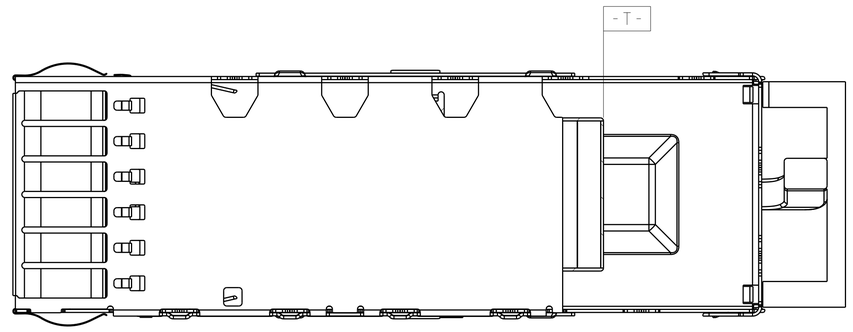

1. MATERIAL:
   CAGE MATERIAL : 0.25 THICK NICKEL SILVER.
   SPRING MATERIAL: COPPER ALLOY
   HEAT SINK MATERIAL: ALUMINUM
   CLIP MATERIAL: STAINLESS STEEL
   LIGHT PIPE MATERIAL: POLYCARBONATE WITH 94 V-0
   ORGANIZER MATERIAL: POLYESTER WITH 94 V-0

2. FINISH:
   SPRING: NICKEL PLATING
   HEAT SINK: BLACK ANODIZE

△3 DIMENSION APPLIES WITH MODULE INSTALLED IN THE CAGE TO TOP OF HEAT SINK.

△4 REFERENCE APPLICATION SPEC 114-***** FOR RECOMMENDED DRILL HOLE DIAMETER AND PLATING THICKNESS.

△5 DATUM AND BASIC DIMENSIONS ESTABLISHED BY CUSTOMERS.

6. MINIMUM PC BOARD THICKNESS : SINGLES SIDED: 1.57 MIN
   DOUBLE SIDED: 3.00 MIN

△7 DATUM -A- IS TOP SURFACE OF THE HOST BOARD.

△8 DATE CODE (YYWWD) MARKED APPROXIMATELY AS SHOWN

9. MATES WITH QSFP28 MSA COMPATIBLE TRANSCEIVER.

2170705-2 AS SHOWN

DESIGN APPROVED THIS PRINT IS
PRELIMINARY
TO FIRST PIECE APPROVAL
CONTACT PRODUCT ENGINEERING
BEFORE USING THIS PRINT

THIS DRAWING IS A CONTROLLED DOCUMENT.

DIMENSIONS: mm

TOLERANCES UNLESS OTHERWISE SPECIFIED:
0 PLC ±0.25
1 PLC ±0.25
2 PLC ±0.20
3 PLC ±0.100
4 PLC ±
ANGLES ±

MATERIAL -
FINISH -

DWN JASON YANG 07MAR2014
CHK - 07MAR2014
APVD - 07MAR2014
PRODUCT SPEC -
APPLICATION SPEC -
WEIGHT -

TE Connectivity

NAME CAGE ASSEMBLY, QSFP28, THRU BEZEL WITH EMI SPRING FINGER HEAT SINK, LIGHT PIPE

PRELIMINARY

SIZE	CAGE CODE	DRAWING NO	RESTRICTED TO
A1	00779	C-2170705	-

Customer Drawing

SCALE 4:1 SHEET 1 OF 7 REV 3

4805 (3/11)

THIS DRAWING IS UNPUBLISHED. RELEASED FOR PUBLICATION -
© COPYRIGHT copyright_dBYe- ALL RIGHTS RESERVED.

LOC	DIST
-	-

REVISIONS

P	LTR	DESCRIPTION	DATE	DWN	APVD
	-	SEE SHEET 1	-	-	-

HEAT SINK OPTIONS

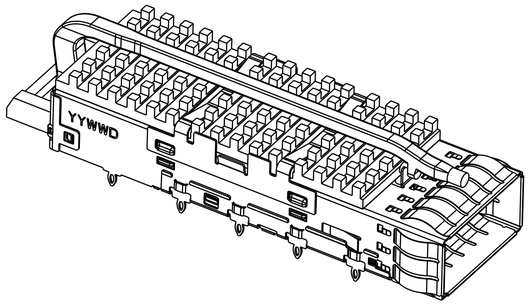

PCI HEAT SINK
SCALE 5:2

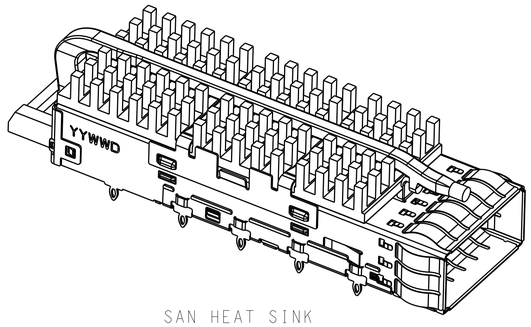

SAN HEAT SINK
SCALE 5:2

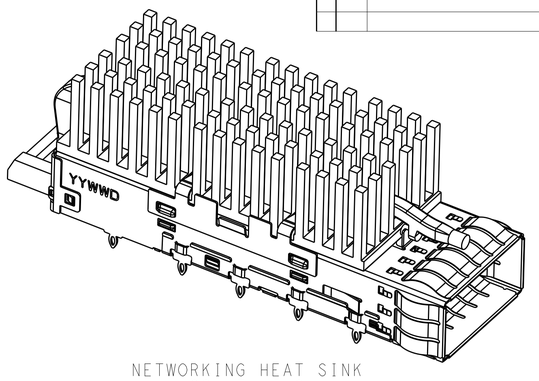

NETWORKING HEAT SINK
SCALE 5:2

OF REAR LEGS OPTIONS

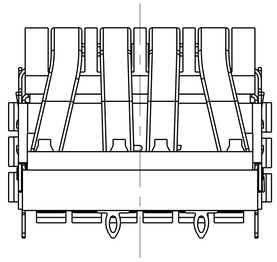

2 REAR LEGS
SCALE 4:1

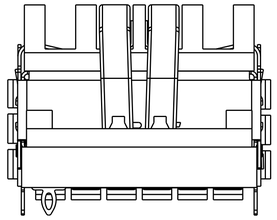

1 REAR LEG
SCALE 4:1

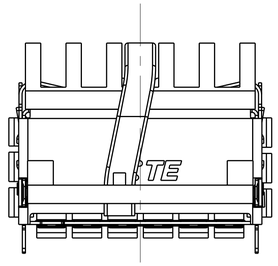

0 REAR LEG
SCALE 4:1

LIGHT PIPE OPTIONS

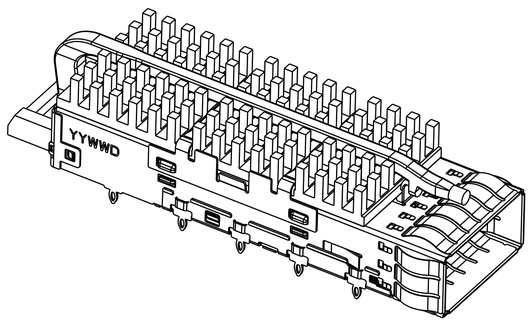

SINGLE LIGHT PIPE
SCALE 5:2

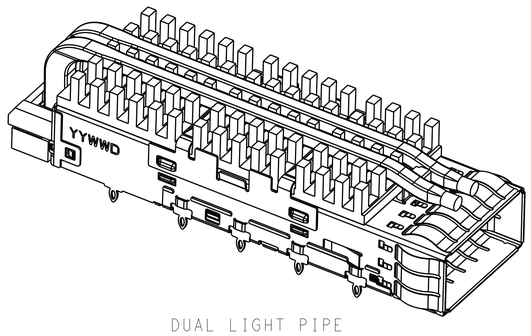

DUAL LIGHT PIPE
SCALE 5:2

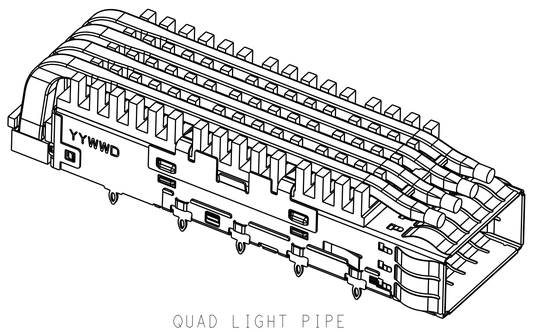

QUAD LIGHT PIPE
SCALE 5:2

THIS DRAWING IS A CONTROLLED DOCUMENT.

DIMENSIONS: mm

TOLERANCES UNLESS OTHERWISE SPECIFIED:
0 PLC ±0.25
1 PLC ±0.25
2 PLC ±0.20
3 PLC ±0.100
4 PLC ±-
ANGLES ±-

MATERIAL -
FINISH -

DWN JASON YANG 07MAR2014
CHK - 07MAR2014
APVD 07MAR2014
PRODUCT SPEC -
APPLICATION SPEC -
WEIGHT -

TE Connectivity

NAME CAGE ASSEMBLY, QSFP28, THRU BEZEL WITH EMI SPRING FINGER HEAT SINK, LIGHT PIPE

SIZE	CAGE CODE	DRAWING NO	RESTRICTED TO
A1	00779	C-2170705	-

Customer Drawing

SCALE 4:1 SHEET 2 OF 7 REV 3

THIS DRAWING IS UNPUBLISHED. RELEASED FOR PUBLICATION -
© COPYRIGHT copyright_date ALL RIGHTS RESERVED.

LOC	DIST
-	-

REVISIONS

P	LTR	DESCRIPTION	DATE	DWN	APVD
	-	SEE SHEET 1	-	-	-

BOM

3.4	1	23.0	NETWORKING	QUAD	5-2170705-9
	1	23.0	NETWORKING	QUAD	4-2170705-9
	1	16.0	SAN	QUAD	4-2170705-8
	1	13.7	PCI	QUAD	4-2170705-7
	0	23.0	NETWORKING	QUAD	4-2170705-6
	0	16.0	SAN	QUAD	4-2170705-5
	0	13.7	PCI	QUAD	4-2170705-4
	2	23.0	NETWORKING	QUAD	4-2170705-3
	2	16.0	SAN	QUAD	4-2170705-2
	2	13.7	PCI	QUAD	4-2170705-1
	1	23.0	NETWORKING	DUAL	2-2170705-9
	1	16.0	SAN	DUAL	2-2170705-8
	1	13.7	PCI	DUAL	2-2170705-7
	0	23.0	NETWORKING	DUAL	2-2170705-6
2.9	0	16.0	SAN	DUAL	2-2170705-5
	0	13.7	PCI	DUAL	2-2170705-4
	2	23.0	NETWORKING	DUAL	2-2170705-3
	2	16.0	SAN	DUAL	2-2170705-2
	2	13.7	PCI	DUAL	2-2170705-1
	1	23.0	NETWORKING	SINGLE	2170705-9
	1	16.0	SAN	SINGLE	2170705-8
	1	13.7	PCI	SINGLE	2170705-7
	0	23.0	NETWORKING	SINGLE	2170705-6
	0	16.0	SAN	SINGLE	2170705-5
	0	13.7	PCI	SINGLE	2170705-4
	2	23.0	NETWORKING	SINGLE	2170705-3
	2	16.0	SAN	SINGLE	2170705-2
	2	13.7	PCI	SINGLE	2170705-1
DIM B	# REAR PINS	DIM A	APPLICATION (HEAT SINK OPTION)	LIGHT PIPE OPTION	PART NUMBER

THIS DRAWING IS A CONTROLLED DOCUMENT.

DIMENSIONS: mm

TOLERANCES UNLESS OTHERWISE SPECIFIED:
0 PLC ±0.25
1 PLC ±0.25
2 PLC ±0.20
3 PLC ±0.100
4 PLC ±-
ANGLES ±-

MATERIAL - -

FINISH - -

DWN JASON YANG 07MAR2014
CHK - 07MAR2014
APVD - 07MAR2014

PRODUCT SPEC -
APPLICATION SPEC -
WEIGHT -

TE Connectivity

NAME CAGE ASSEMBLY, QSFP28, THRU BEZEL WITH EMI SPRING FINGER HEAT SINK, LIGHT PIPE

SIZE	CAGE CODE	DRAWING NO	RESTRICTED TO
A1	00779	C-2170705	-

Customer Drawing

SCALE 4:1 SHEET 3 OF 7 REV 3

THIS DRAWING IS UNPUBLISHED. RELEASED FOR PUBLICATION -
© COPYRIGHT copyright_dBYe- ALL RIGHTS RESERVED.

LOC	DIST
-	-

REVISIONS

P	LTR	DESCRIPTION	DATE	DWN	APVD
	-	SEE SHEET 1	-	-	-

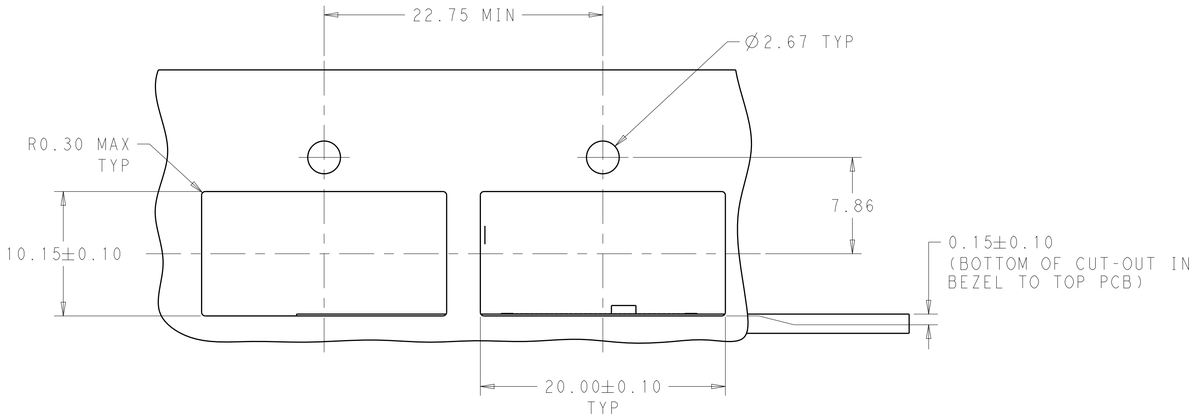

SINGLE LIGHT PIPE TYPE

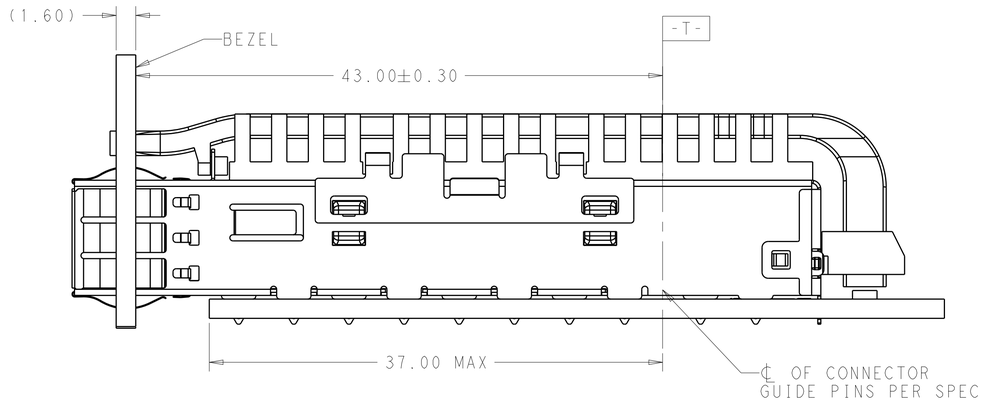

SINGLE SIDE MOUNTING
SCALE 4:1

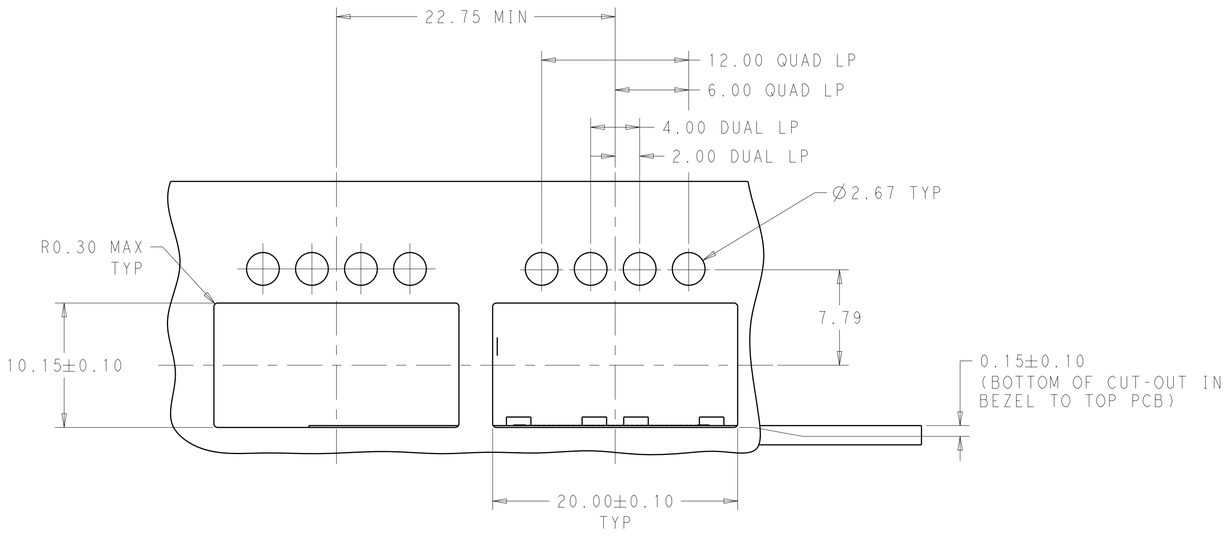

DUAL/QUAD LIGHT PIPE TYPE

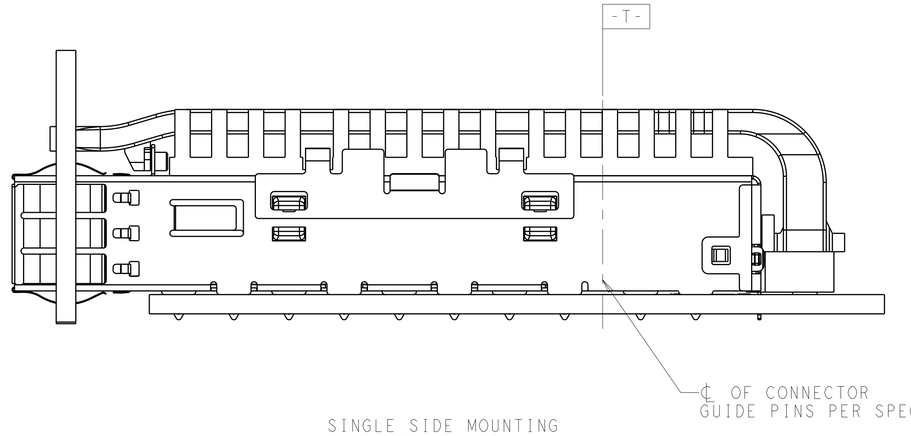

SINGLE SIDE MOUNTING
SCALE 4:1

THIS DRAWING IS A CONTROLLED DOCUMENT.

DIMENSIONS: mm

TOLERANCES UNLESS OTHERWISE SPECIFIED:
0 PLC ±0.25
1 PLC ±0.25
2 PLC ±0.20
3 PLC ±0.100
4 PLC ±-
ANGLES ±-

MATERIAL -
FINISH -

DWN JASON YANG 07MAR2014
CHK - 07MAR2014
APVD 07MAR2014
PRODUCT SPEC -
APPLICATION SPEC -
WEIGHT -

TE Connectivity

NAME CAGE ASSEMBLY, QSFP28, THRU BEZEL WITH EMI SPRING FINGER HEAT SINK, LIGHT PIPE

SIZE	CAGE CODE	DRAWING NO	RESTRICTED TO
A1	00779	C-2170705	-

Customer Drawing

SCALE 4:1 SHEET 4 OF 7 REV 3

4805 (3/11)

THIS DRAWING IS UNPUBLISHED. RELEASED FOR PUBLICATION -
© COPYRIGHT copyright_date - ALL RIGHTS RESERVED.

LOC	DIST
-	-

REVISIONS

P	LTR	DESCRIPTION	DATE	DWN	APVD
	-	SEE SHEET 1	-	-	-
-	-				

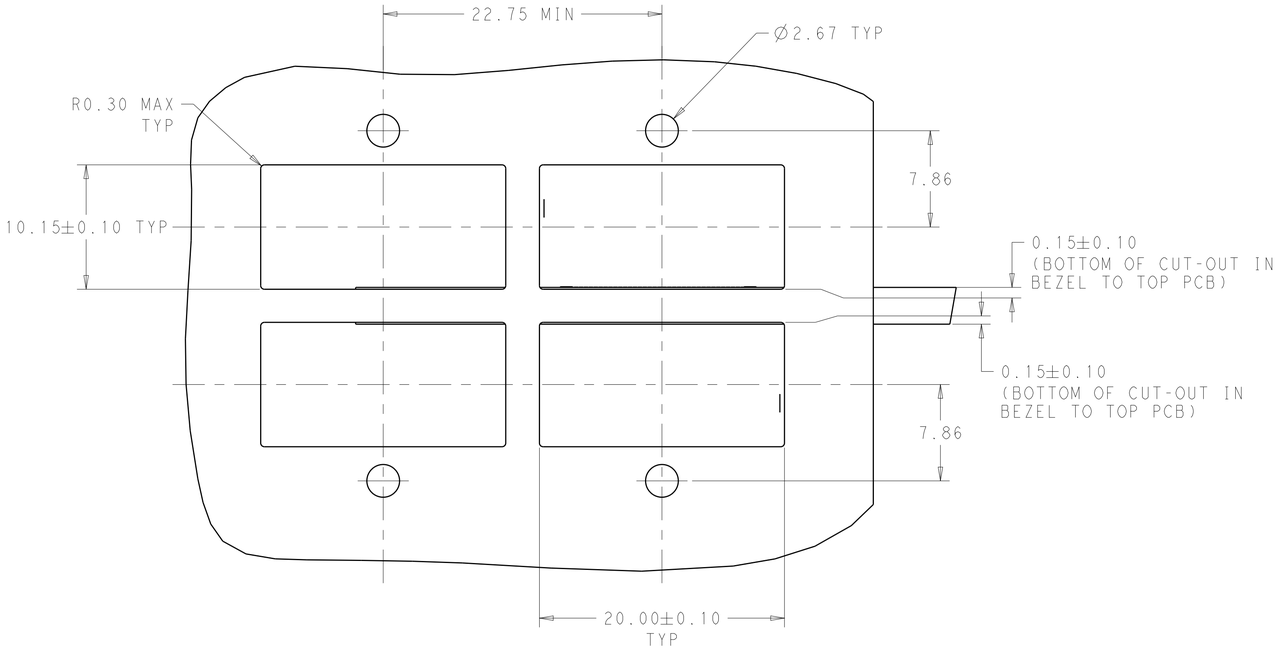

SINGLE LIGHT PIPE TYPE

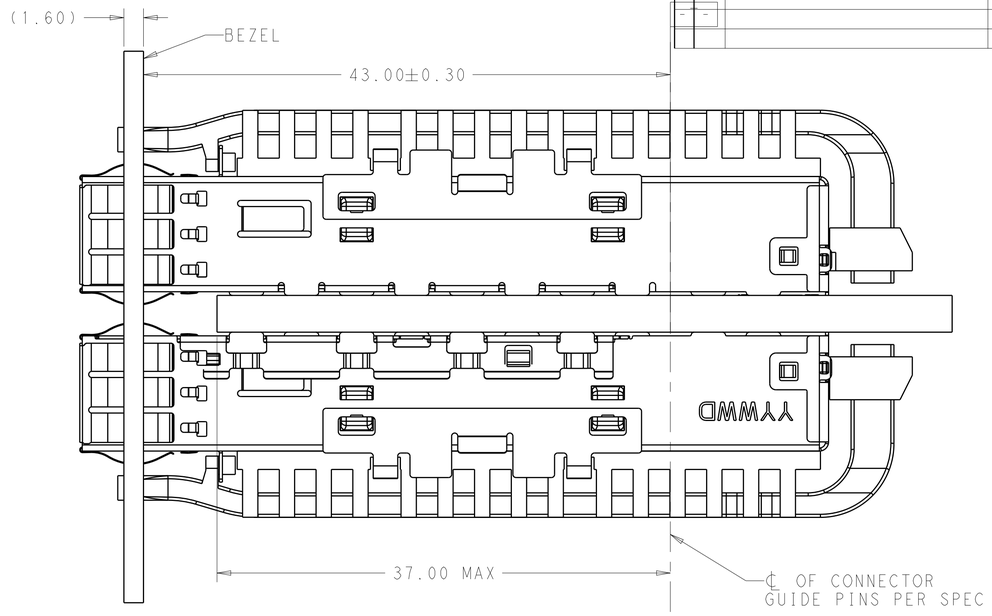

BELLY TO BELLY MOUNTING
SCALE 4:1

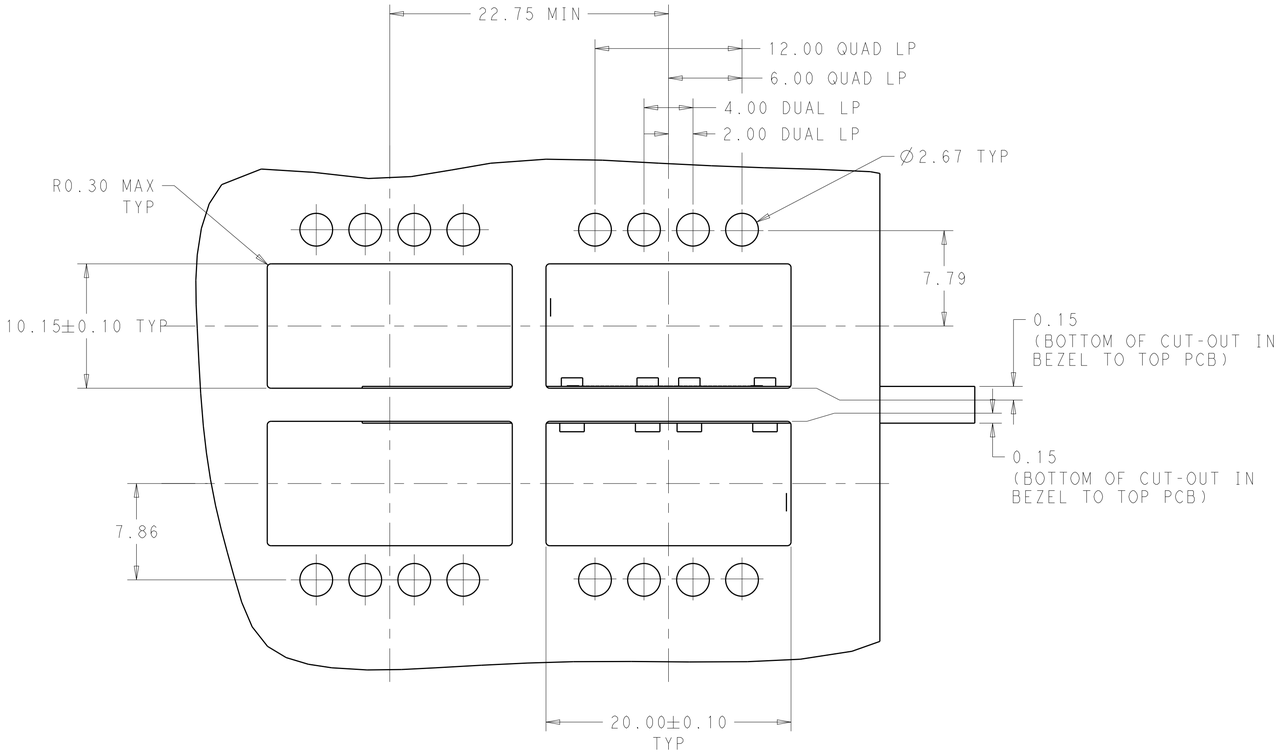

DUAL/QUAD LIGHT PIPE TYPE

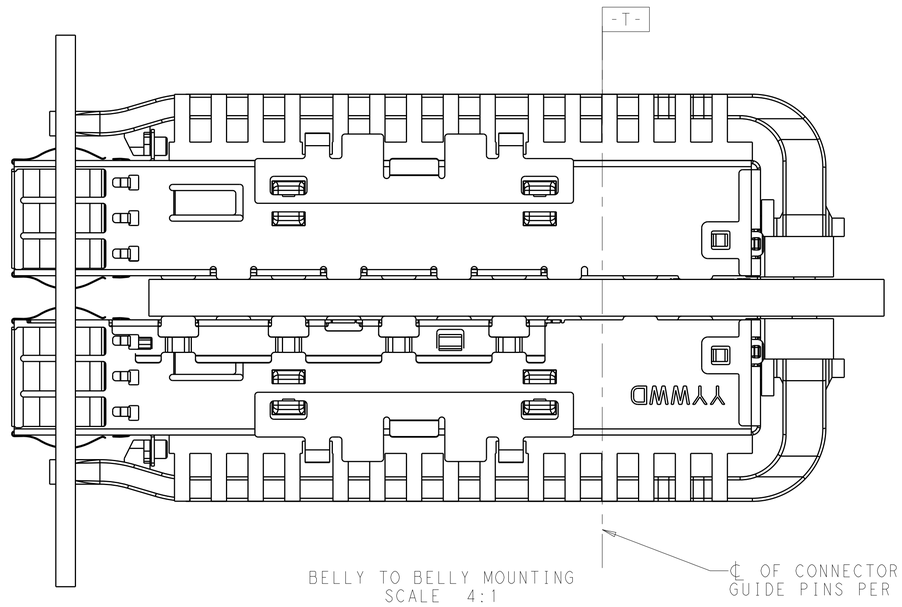

BELLY TO BELLY MOUNTING
SCALE 4:1

THIS DRAWING IS A CONTROLLED DOCUMENT.

DIMENSIONS: mm

TOLERANCES UNLESS OTHERWISE SPECIFIED:
0 PLC ±0.25
1 PLC ±0.25
2 PLC ±0.20
3 PLC ±0.100
4 PLC +-
ANGLES +-

MATERIAL -
FINISH -

DWN	JASON YANG	07MAR2014
CHK	-	07MAR2014
APVD	-	07MAR2014
PRODUCT SPEC	-	
APPLICATION SPEC	-	
WEIGHT	-	

TE Connectivity

NAME: CAGE ASSEMBLY, QSFP28, THRU BEZEL WITH EMI SPRING FINGER HEAT SINK, LIGHT PIPE

SIZE	CAGE CODE	DRAWING NO	RESTRICTED TO
A1	00779	C-2170705	-

Customer Drawing | SCALE 4:1 | SHEET 5 OF 7 | REV 3

THIS DRAWING IS UNPUBLISHED. RELEASED FOR PUBLICATION -
© COPYRIGHT copyright.dgrc- ALL RIGHTS RESERVED.

LOC	DIST
-	-

REVISIONS

P	LTR	DESCRIPTION	DATE	DWN	APVD
	-	SEE SHEET 1	-	-	-

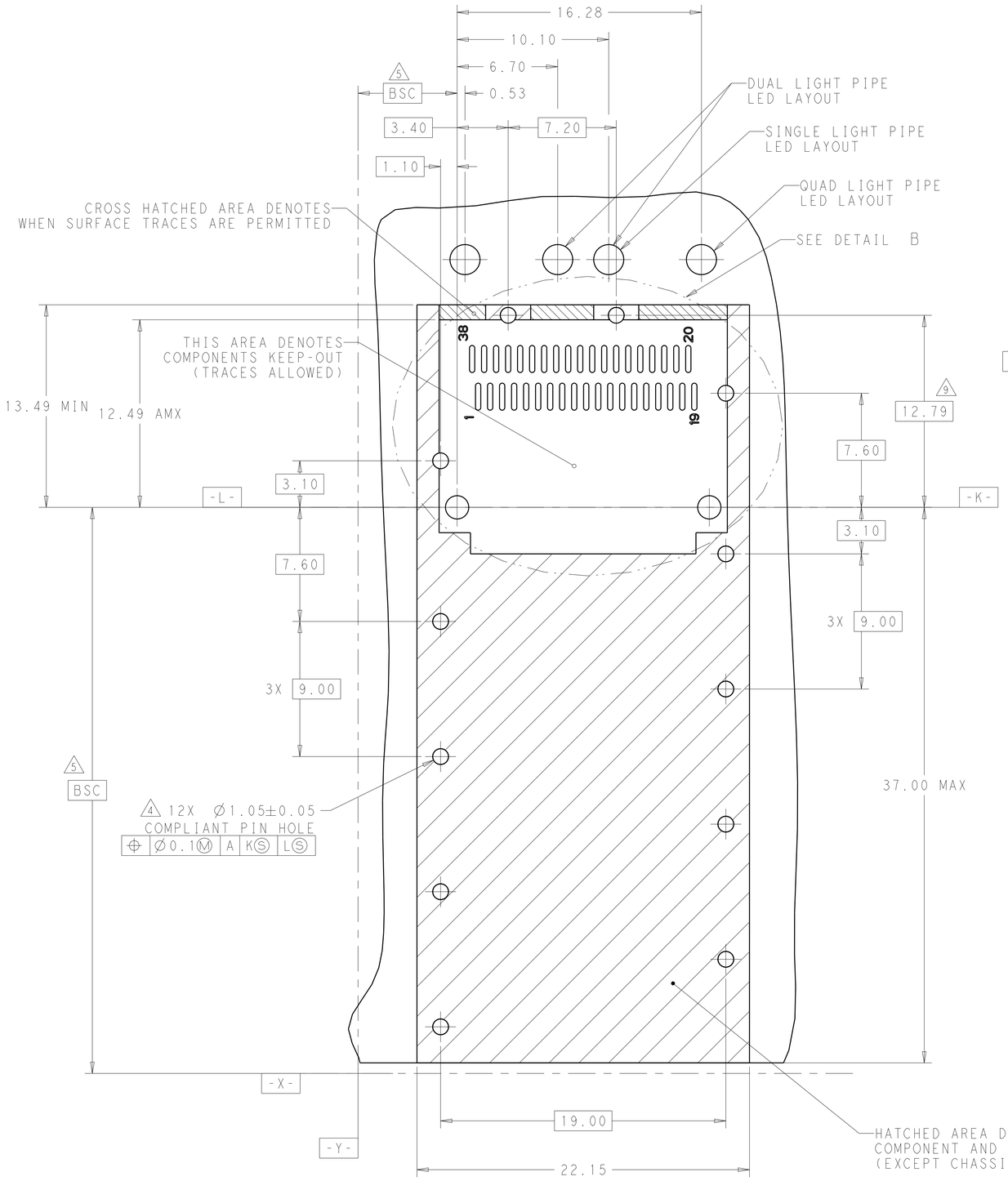

RECOMMENDED PCB LAYOUT
SINGLE TYPE OF 2 REAR HOLES OF LEGS
PCB TOLERANCE: ±0.05
SCALE 6:1

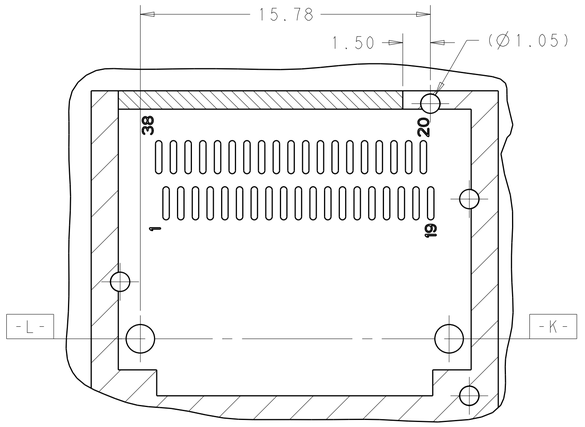

RECOMMENDED PCB LAYOUT
SINGLE TYPE OF 1 REAR HOLES OF LEGS
PCB TOLERANCE: ±0.05
SCALE 6:1

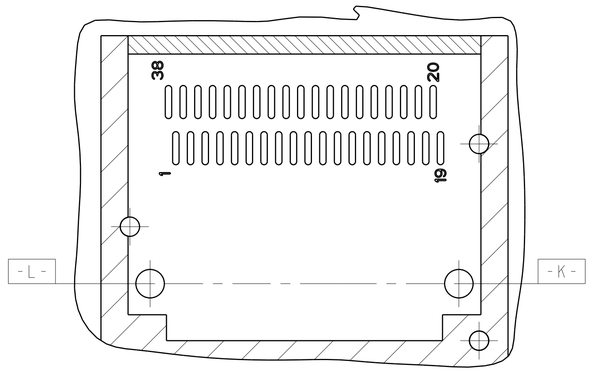

RECOMMENDED PCB LAYOUT
SINGLE TYPE OF 0 REAR HOLES OF LEGS
PCB TOLERANCE: ±0.05
SCALE 6:1

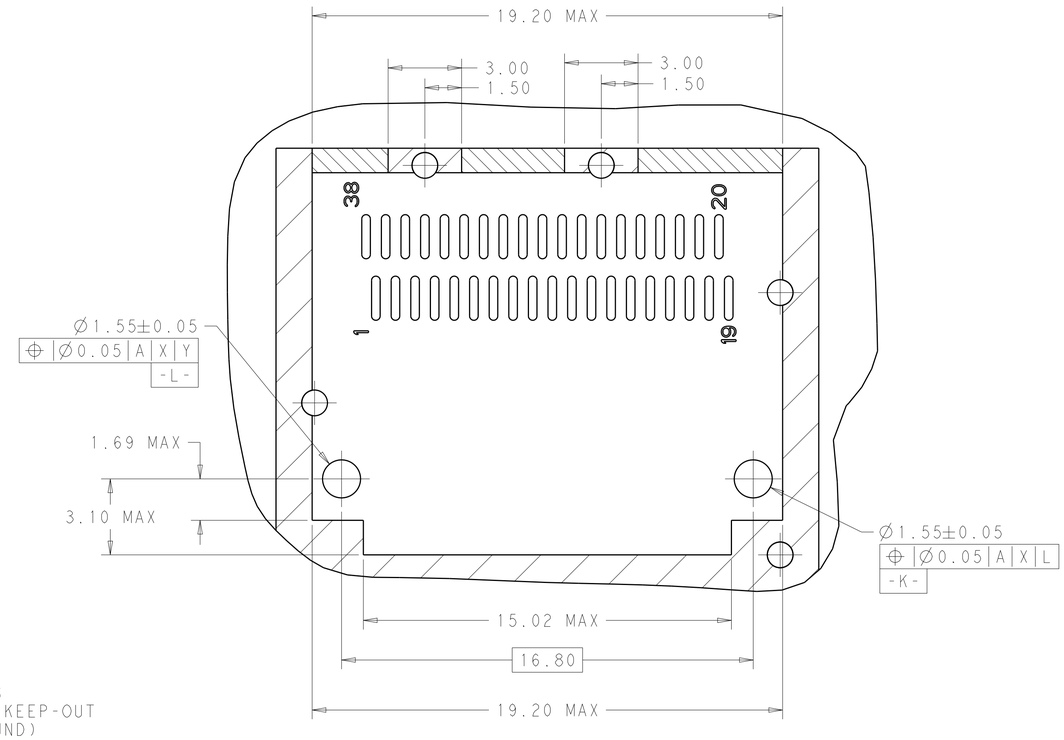

DETAIL B
SCALE 8:1

THIS DRAWING IS A CONTROLLED DOCUMENT.

DIMENSIONS: mm

TOLERANCES UNLESS OTHERWISE SPECIFIED:
0 PLC ±0.25
1 PLC ±0.25
2 PLC ±0.20
3 PLC ±0.100
4 PLC ±
ANGLES ±

MATERIAL -
FINISH - -

DWN	JASON YANG	07MAR2014
CHK	-	07MAR2014
APVD	-	07MAR2014
PRODUCT SPEC	-	
APPLICATION SPEC	-	
WEIGHT	-	

TE Connectivity

NAME CAGE ASSEMBLY, QSFP28, THRU BEZEL WITH EMI SPRING FINGER HEAT SINK, LIGHT PIPE

SIZE	CAGE CODE	DRAWING NO	RESTRICTED TO
A1	00779	C-2170705	-

Customer Drawing | SCALE 4:1 | SHEET 6 OF 7 | REV 3

4805 (3/11)

THIS DRAWING IS UNPUBLISHED. RELEASED FOR PUBLICATION -
© COPYRIGHT copyright_date ALL RIGHTS RESERVED.

LOC	DIST
-	-

REVISIONS

P	LTR	DESCRIPTION	DATE	DWN	APVD
	-	SEE SHEET 1	-	-	-

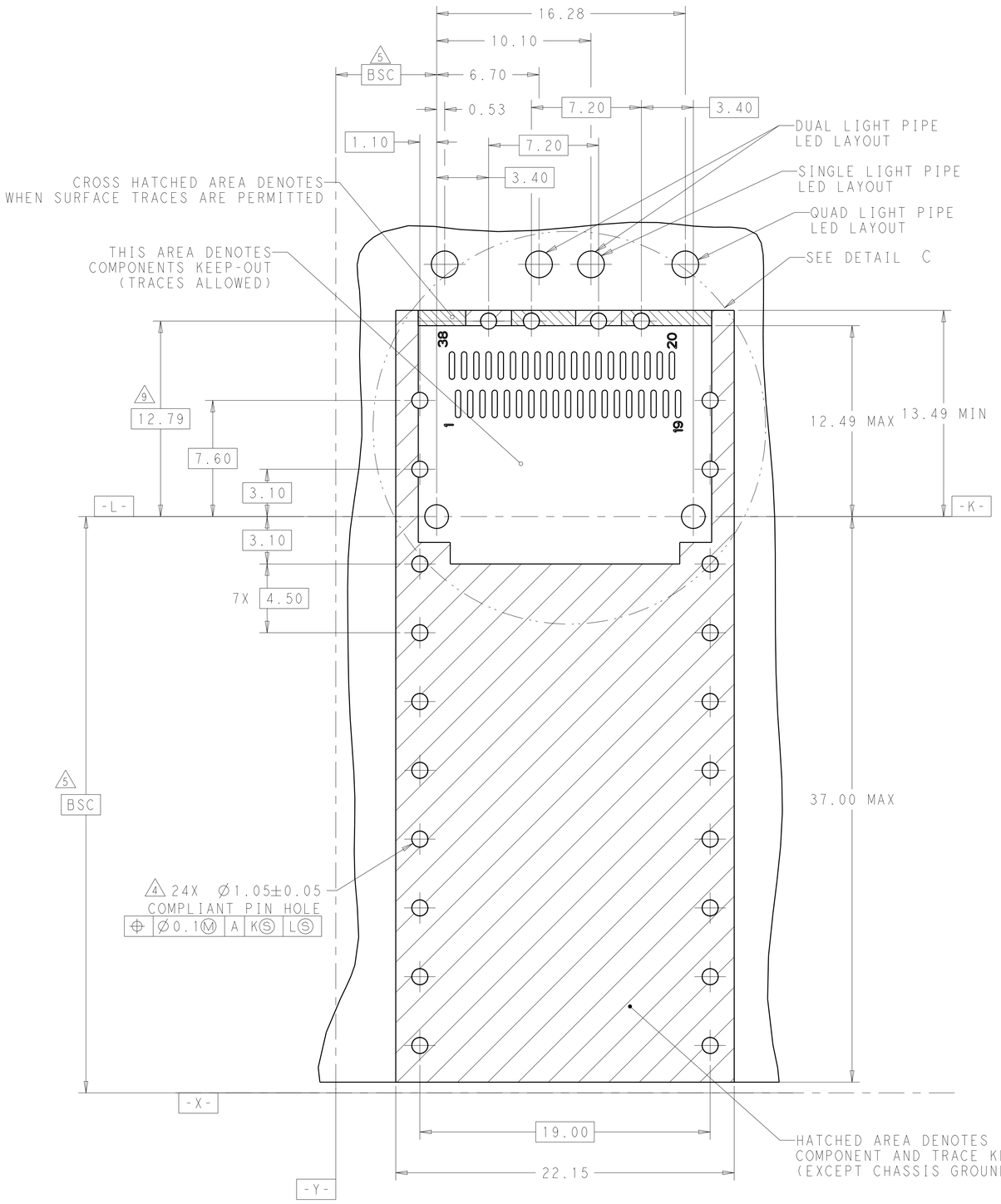

RECOMMENDED PCB LAYOUT
BELLY TO BELLY TYPE OF 2 REAR HOLES OF LEGS
PCB TOLERANCE: ±0.05
SCALE 6:1

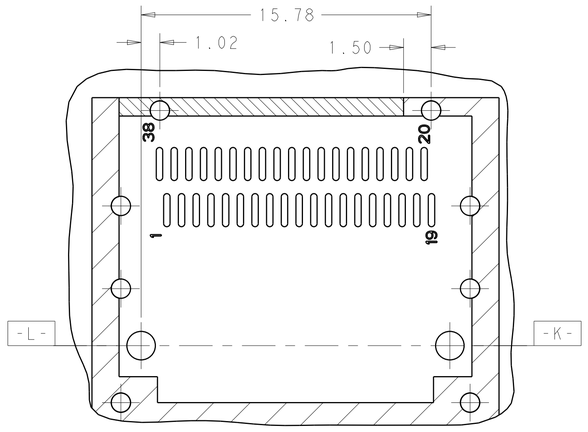

RECOMMENDED PCB LAYOUT
BELLY TO BELLY TYPE OF 1 REAR HOLES OF LEGS
PCB TOLERANCE: ±0.05
SCALE 6:1

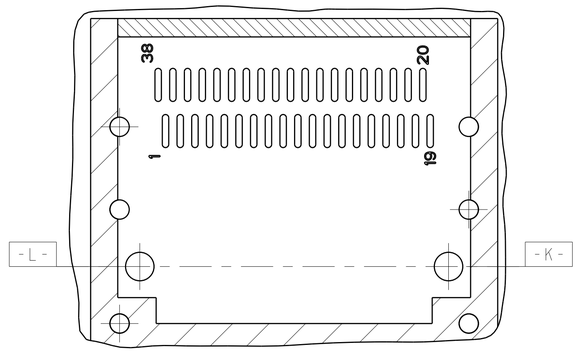

RECOMMENDED PCB LAYOUT
BELLY TO BELLY TYPE OF 0 REAR HOLES OF LEGS
PCB TOLERANCE: ±0.05
SCALE 6:1

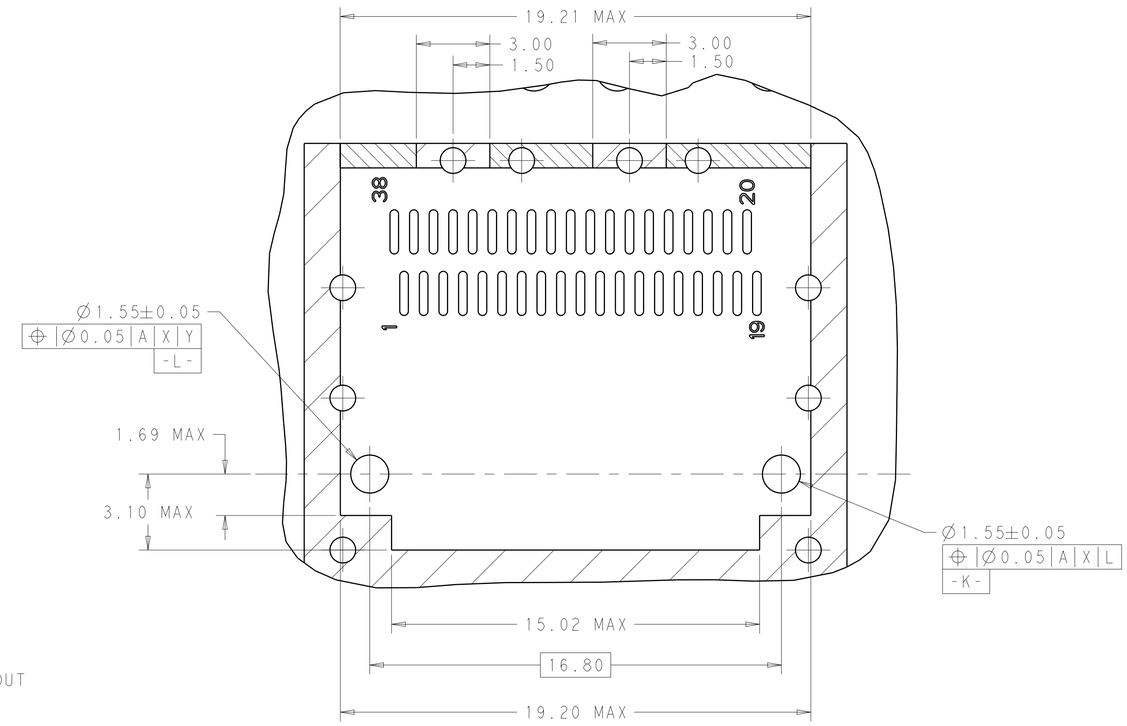

DETAIL C
SCALE 8:1

THIS DRAWING IS A CONTROLLED DOCUMENT.		DWN JASON YANG 07MAR2014	TE Connectivity
		CHK - 07MAR2014	
DIMENSIONS: mm	TOLERANCES UNLESS OTHERWISE SPECIFIED: 0 PLC ±0.25; 1 PLC ±0.25; 2 PLC ±0.20; 3 PLC ±0.100; 4 PLC ±; ANGLES ±; FINISH -	APVD 07MAR2014	NAME CAGE ASSEMBLY, QSFP28, THRU BEZEL WITH EMI SPRING FINGER HEAT SINK, LIGHT PIPE
		PRODUCT SPEC -	
		APPLICATION SPEC -	SIZE A1 · CAGE CODE 00779 · DRAWING NO C-2170705 · RESTRICTED TO -
MATERIAL -		WEIGHT -	
		Customer Drawing	SCALE 4:1 · SHEET 7 OF 7 · REV 3