SIEMENS

SITRANS T

Temperature transmitter SITRANS TH200/TH300

Operating Instructions

Introduction 1

Safety information 2

Description 3

Installation 4

Connecting 5

Operation 6

Functional safety 7

Commissioning 8

Functions 9

Technical data 10

Dimension drawings 11

Spare parts and accessories 12

Appendix A

7NG3211-1*N00 SITRANS TH200 7NG3212-0*N00 SITRANS TH300

08/2015

A5E00393069-04

Legal information

Warning notice system

This manual contains notices you have to observe in order to ensure your personal safety, as well as to prevent damage to property. The notices referring to your personal safety are highlighted in the manual by a safety alert symbol, notices referring only to property damage have no safety alert symbol. These notices shown below are graded according to the degree of danger.

⚠ DANGER

indicates that death or severe personal injury **will** result if proper precautions are not taken.

⚠ WARNING

indicates that death or severe personal injury **may** result if proper precautions are not taken.

⚠ CAUTION

indicates that minor personal injury can result if proper precautions are not taken.

NOTICE

indicates that property damage can result if proper precautions are not taken.

If more than one degree of danger is present, the warning notice representing the highest degree of danger will be used. A notice warning of injury to persons with a safety alert symbol may also include a warning relating to property damage.

Qualified Personnel

The product/system described in this documentation may be operated only by **personnel qualified** for the specific task in accordance with the relevant documentation, in particular its warning notices and safety instructions. Qualified personnel are those who, based on their training and experience, are capable of identifying risks and avoiding potential hazards when working with these products/systems.

Proper use of Siemens products

Note the following:

⚠ WARNING

Siemens products may only be used for the applications described in the catalog and in the relevant technical documentation. If products and components from other manufacturers are used, these must be recommended or approved by Siemens. Proper transport, storage, installation, assembly, commissioning, operation and maintenance are required to ensure that the products operate safely and without any problems. The permissible ambient conditions must be complied with. The information in the relevant documentation must be observed.

Trademarks

All names identified by ® are registered trademarks of Siemens AG. The remaining trademarks in this publication may be trademarks whose use by third parties for their own purposes could violate the rights of the owner.

Disclaimer of Liability

We have reviewed the contents of this publication to ensure consistency with the hardware and software described. Since variance cannot be precluded entirely, we cannot guarantee full consistency. However, the information in this publication is reviewed regularly and any necessary corrections are included in subsequent editions.

Siemens AG
Division Process Industries and Drives
Postfach 48 48
90026 NÜRNBERG
GERMANY

Order number: A5E00393069
Ⓟ 09/2015 Subject to change

Copyright © Siemens AG 2015.
All rights reserved

Table of contents

1 Introduction 7
1.1 Purpose of this documentation 7
1.2 History 7
1.3 Notes on warranty 8
1.4 Laws and directives 8
1.5 Conformity with European directives 8
2 Safety information 11
3 Description 13
3.1 Application 13
3.2 Product features 13
3.3 Nameplate structure 14
3.4 Mode of operation 15
3.5 Communication 16
3.5.1 Communication overview 16
3.5.2 HART communication with supply from voltage source 16
3.5.3 HART communication with supply via isolating power supply 17
4 Installation 19
4.1 Safety information 19
4.2 Installation in the connection head 19
4.3 Installation on DIN rail and G rail 21
5 Connecting 23
5.1 Safety information when connecting 24
5.1.1 Safety notes for connecting in hazardous TH200/300 24
5.2 Connecting the auxiliary power supply 26
5.3 Connection diagrams 27
5.4 Notes on measuring current 28
6 Operation 29
6.1 Operation of the SITRANS TH200 29
6.2 Operation of the SITRANS TH300 30
6.2.1 Operation with the HART modem and SIMATIC PDM 30
6.2.2 Operation with HART communicator 31
7 Functional safety 33
7.1 Safety function 33

7.2 Safety-Instrumented system in single-channel operation (SIL 2) ... 34
7.3 Safety-Instrumented system in multi-channel operation (SIL 3) ... 34
7.4 Safety Integrity Level (SIL) ... 35
7.5 Settings ... 37
7.6 Safety characteristics ... 38
7.7 Maintenance/Checking ... 39
8 Commissioning ... 41
8.1 LED operating indicator ... 41
9 Functions ... 43
9.1 General information ... 43
9.2 Broken wire monitoring ... 44
9.3 Short-circuit monitoring ... 45
9.4 Line compensation ... 45
9.5 Type of characteristic curve (rising or falling) ... 45
9.6 Measured value offset ... 45
9.7 Sensor factor ... 46
9.8 Cold junction compensation with thermocouples ... 46
9.9 Calculation of differential value/mean value ... 46
9.10 Electrical damping ... 47
9.11 Current simulator function (only in SITRANS TH300) ... 47
9.12 Alarm current ... 47
9.13 Sensor calibration ... 48
9.13.1 Sensor calibration (one point) ... 48
9.13.2 Sensor calibration (two point) ... 48
9.13.3 Trimming the lower sensor calibration (trim) point ... 49
9.13.4 Trimming the upper sensor trim point ... 49
9.14 Current simulator calibration (digital-to-analog trim) ... 51
9.14.1 Function ... 51
9.14.2 Application example: Current input calibration at 4 mA and 20 mA ... 51
9.15 Special characteristic curve ... 52
9.16 Factory parameters ... 55
9.17 Diagnostics ... 56
9.17.1 Diagnostic functions ... 56
9.17.2 Violations of specification ... 57
9.18 Runtime meters in temperature classes ... 58
9.19 Slave pointer ... 59
9.20 Simulation (only in SITRANS TH300) ... 60
9.21 Individual password protection (SITRANS TH300 only) ... 61

10 Technical data 65
10.1 Technical data 65
10.2 Digital measuring error 71
11 Dimension drawings 73
11.1 Dimension drawing for SITRANS TH200/TH300 73
11.2 Dimension drawing for the DIN rail adapter 73
12 Spare parts and accessories 75
A Appendix 77
A.1 Certificate 77
A.2 Control drawing 77
A.3 Return procedure 79
A.4 Disposal 79
A.5 Technical support 79
Index 81

Introduction 1

1.1 Purpose of this documentation

These instructions contain all information required to commission and use the device. Read the instructions carefully prior to installation and commissioning. In order to use the device correctly, first review its principle of operation.

The instructions are aimed at persons mechanically installing the device, connecting it electronically, configuring the parameters and commissioning it, as well as service and maintenance engineers.

1.2 History

This history establishes the correlation between the current documentation and the valid firmware of the device.

The documentation of this edition is applicable for the following firmware:

Edition	Firmware identifier nameplate	System integration	Installation path for PDM
06/2006	FW: 01.01.02 HW: 01.00	TH200: SIPROM T V1.07 TH300: PDM V6.0DD Rev. 1.00	TH200: not relevant TH300: SITRANS TH300
03/2008 06/2010	FW: 01.01.04 HW: 01.02	TH200: SIPROM T V1.2.1 TH300: PDM V6.0DD Rev. 1.00	TH200: not relevant TH300: SITRANS TH300
08/2015	FW: 01.01.04 HW: 01.02	TH200: SIPROM T V1.2.3 TH300: PDM V8.X DD Rev. 1.01.06	TH200: Not relevant TH300: SITRANS TH300

The most important changes in the documentation when compared with the respective previous edition are given in the following table.

Edition	Remark
06/2006	First edition
03/2008	Revision of content and layout
08/2015	Chapter "Functional Safety" updated

1.3 Notes on warranty

The contents of this manual shall not become part of or modify any prior or existing agreement, commitment or legal relationship. The sales contract contains all obligations on the part of Siemens as well as the complete and solely applicable warranty conditions. Any statements regarding device versions described in the manual do not create new warranties or modify the existing warranty.

The content reflects the technical status at the time of publishing. Siemens reserves the right to make technical changes in the course of further development.

1.4 Laws and directives

Observe the test certification, provisions and laws applicable in your country during connection, assembly and operation. These include, for example:

- National Electrical Code (NEC - NFPA 70) (USA)
- Canadian Electrical Code (CEC) (Canada)

Further provisions for hazardous area applications are for example:

- IEC 60079-14 (international)
- EN 60079-14 (EC)

1.5 Conformity with European directives

The CE marking on the device symbolizes the conformity with the following European directives:

Electromagnetic compatibility EMC 2004/108/EC	Directive of the European Parliament and of the Council on the approximation of the laws of the Member States relating to electromagnetic compatibility and repealing Directive 89/336/EEC.
Low voltage directive LVD 2006/95/EC	Directive of the European Parliament and of the Council on the harmonisation of the laws of Member States relating to electrical equipment designed for use within certain voltage limits.
Atmosphère explosible ATEX 94/9/EC	Directive of the European Parliament and the Council on the approximation of the laws of the Member States concerning equipment and protective systems intended for use in potentially explosive atmospheres.
2006/95/EC LVD	Directive of the European Parliament and of the Council on the harmonisation of the laws of Member States relating to electrical equipment designed for use within certain voltage limits.
Pressure equipment directive PED 97/23/EC	Directive of the European Parliament and of the Council on the approximation of the laws of the Member States concerning pressure equipment.

Radio and telecommunications terminal equipment R&TTE 1999/5/EC	Directive of the European Parliament and of the Council on radio equipment and telecommunications terminal equipment and the mutual recognition of their conformity.
Measuring instruments directive MID 2004/22/EC	Directive of the European Parliament and the advisory body for harmonization of measuring instruments.
Non-automatic weighing instruments 90/384/EEC	Directive of the European Parliament and of the Council on the approximation of the laws of the Member States concerning non-automatic weighing instruments.

The applicable directives can be found in the EC conformity declaration of the specific device.

Safety information 2

This device left the factory in good working condition. In order to maintain this status and to ensure safe operation of the device, observe these instructions and all the specifications relevant to safety.

Observe the information and symbols on the device. Do not remove any information or symbols from the device. Always keep the information and symbols in a completely legible state.

⚠ WARNING

Improper device modifications

Danger to personnel, system and environment can result from modifications to the device, particularly in hazardous areas.

- Only carry out modifications that are described in the instructions for the device. Failure to observe this requirement cancels the manufacturer's warranty and the product approvals.

Qualified personnel for hazardous area applications

Persons who install, connect, commission, operate, and service the device in a hazardous area must have the following specific qualifications:

- They are authorized, trained or instructed in operating and maintaining devices and systems according to the safety regulations for electrical circuits, high pressures, aggressive, and hazardous media.
- They are authorized, trained, or instructed in carrying out work on electrical circuits for hazardous systems.
- They are trained or instructed in maintenance and use of appropriate safety equipment according to the pertinent safety regulations.

⚠ WARNING

Unsuitable device for the hazardous area

Danger of explosion.

- Only use equipment that is approved for use in the intended hazardous area and labelled accordingly.

WARNING

Loss of safety of device with type of protection "Intrinsic safety Ex i"

If the device has already been operated in non-intrinsically safe circuits or the electrical specifications have not been observed, the safety of the device is no longer ensured for use in hazardous areas. There is a danger of explosion.

- Connect the device with type of protection "Intrinsic safety" solely to an intrinsically safe circuit.
- Observe the specifications for the electrical data on the certificate and/or in Chapter "Technical data".

WARNING

Incorrect selection of type of protection

Danger of explosion in areas subject to explosion hazard.

This device is approved for several types of protection.

1. Decide in favor of one type of protection.
2. Connect the device in accordance with the selected type of protection.
3. In order to avoid incorrect use at a later point, make the types of protection that are not used permanently unrecognizable on the nameplate.

CAUTION

Device damage due to electrical discharge

- Avoid contact with the device or electrical connections without being electrostatically discharged

Description 3

3.1 Application

SITRANS TH200 and SITRANS TH300 transmitters can be used in all industries. Their compact size means that they can be installed in connection heads of type B, in accordance with DIN43729, or larger. Their input stage means that the following sensor and signal sources can be connected:

- Resistance thermometer
- Thermocouples
- Resistance-type transmitter/potentiometer
- DC voltage sources

The output signal is an output current of 4 to 20 mA that corresponds to the sensor characteristic curve.

Explosion-proof transmitters can be installed and operated within potentially explosive atmospheres in compliance with the information given in the relevant certificates and approvals and in these Operating Instructions.

The transmitters SITRANS T200-TF / T300-TF and SITRANS T200-TR / T300-TR are parts of the separately certified devices SITRANS TF (7NG313.-*****) and SITRANS TR200 / TR300 (7NG303.-*****). Further information is given in the specific product manuals or product certificates.

3.2 Product features

- Transmitter with two-wire technology
- Installation in connection heads of type B, in accordance with DIN 43729 or larger, or on a DIN rail
- With communications capability via the HART protocol rev. 5.9 in SITRANS TH300 or via a proprietary protocol in SITRANS TH200. This enables, for example, the sensor activation and measuring range to be programmed.
- Galvanic isolation
- Intrinsically-safe and non-sparking version for use in hazardous areas.
- Two additional test pins for connecting a multimeter make it possible to measure the current signal without interrupting the current loop.
- Indication of operating status: LED green, flashing red, or red
- Special characteristic curve
- Diagnostic functions in SITRANS TH300: Min/max pointer, runtime meter, simulation

3.3 Nameplate structure

The nameplate is located on the enclosure and carries the Order No. and other important product information; see following example.

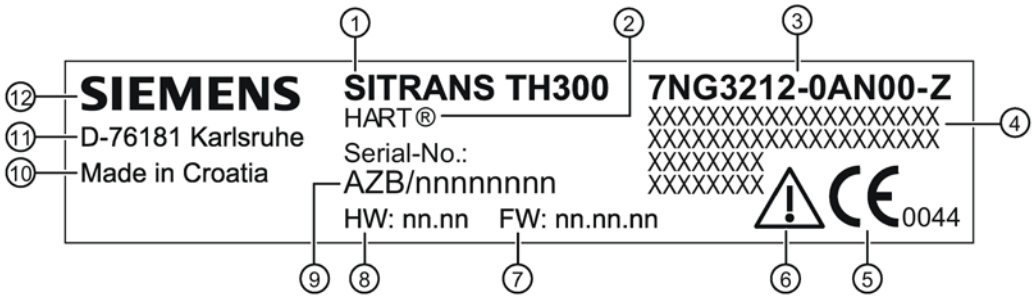

①	Product name	②	Version
③	Order No.	④	Additional data
⑤	CE mark	⑥	Pay attention to the Operating Instructions
⑦	Firmware revision	⑧	Hardware revision
⑨	Serial number	⑩	Place of manufacture
⑪	Manufacturer's address	⑫	Manufacturer

Figure 3-1 Layout of the nameplate, SITRANS TR300 as example

Note

Information about explosion protection

With explosion-proof devices, the information about explosion protection is noted on an additional plate on the enclosure.

Information regarding the certified types of protection can be found in Chapter Technical data (Page 65):

3.4 Mode of operation

Based on the function block diagram, the mode of operation is described below.

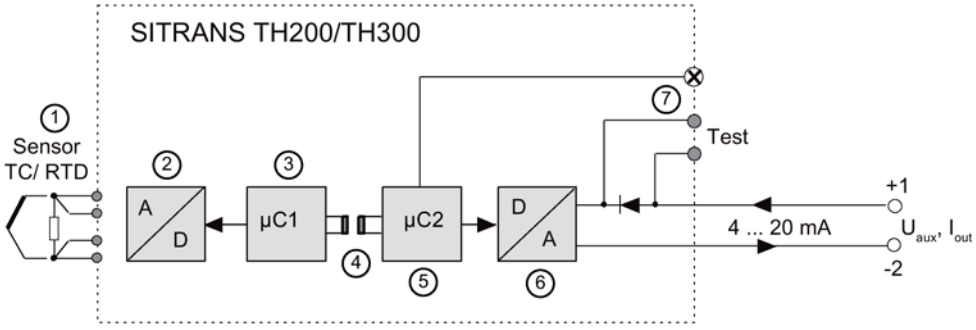

① Sensors such as the resistance thermometer, thermocouple, resistance-type transmitter, millivolt transmitter

② Analog-to-digital converter

③ Microcontroller secondary side

④ Galvanic isolation

⑤ Microcontroller primary side

⑥ Digital-to-analog converter

⑦ LED

U_{aux} Auxiliary power supply

I_{out} Output current

Test Test terminals for brief connection of an ammeter

Figure 3-2 Function block diagram for SITRANS TH200/TH300

Mode of operation of the transmitter

- The sensor supplies an electrical signal ①.
- This signal is converted to a digital signal in an analog-to-digital converter ②.
- The digital signal is evaluated in a secondary-side microcontroller ③ and corrected in accordance with the sensor characteristic.
- The digital signal is transferred to the primary-side microcontroller ⑤ via the galvanic isolation ④.
- The analog output value is calculated in the primary-side microcontroller ⑤. The functional status is indicated by LED ⑦, and the communications data are prepared.
- The digital-to-analog converter ⑥ then converts the signal into an output current of 4 to 20 mA.
- The source of auxiliary power supply is located in the output signal circuit.

3.5 Communication

3.5.1 Communication overview

SITRANS TH200

Parameterization of the SITRANS TH200 is only possible offline. A configuration produced offline on a PC using SIPROM T is transferred to the transmitter via the SIPROM T modem.

SITRANS TH200 does not have a HART interface.

SITRANS TH300

SITRANS TH300 is parameterized online. The transmitter uses the HART protocol for this, and communicates with the following external devices via its HART interface:

- HART communicator
- HART modem to the connected PG/PC with SIMATIC PDM

Both devices provide direct online access to all transmitter functions and parameters.

3.5.2 HART communication with supply from voltage source

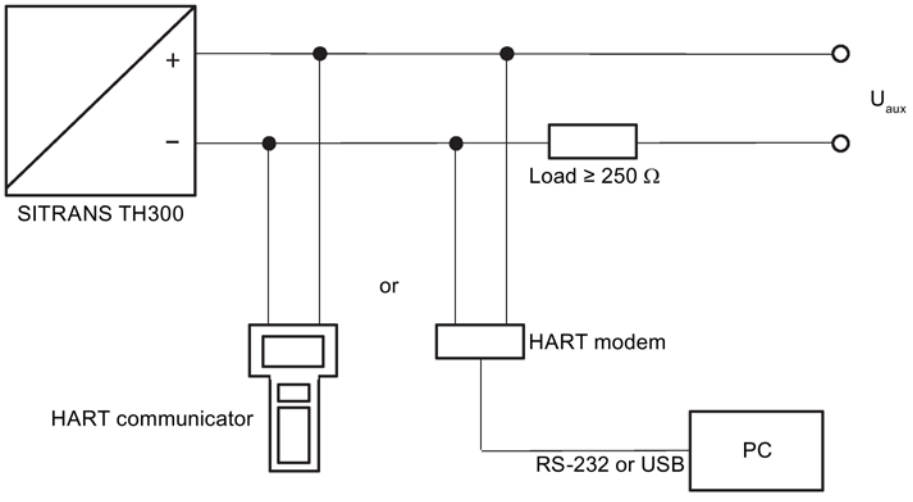

Figure 3-3 HART communication with supply from voltage source

3.5.3 HART communication with supply via isolating power supply

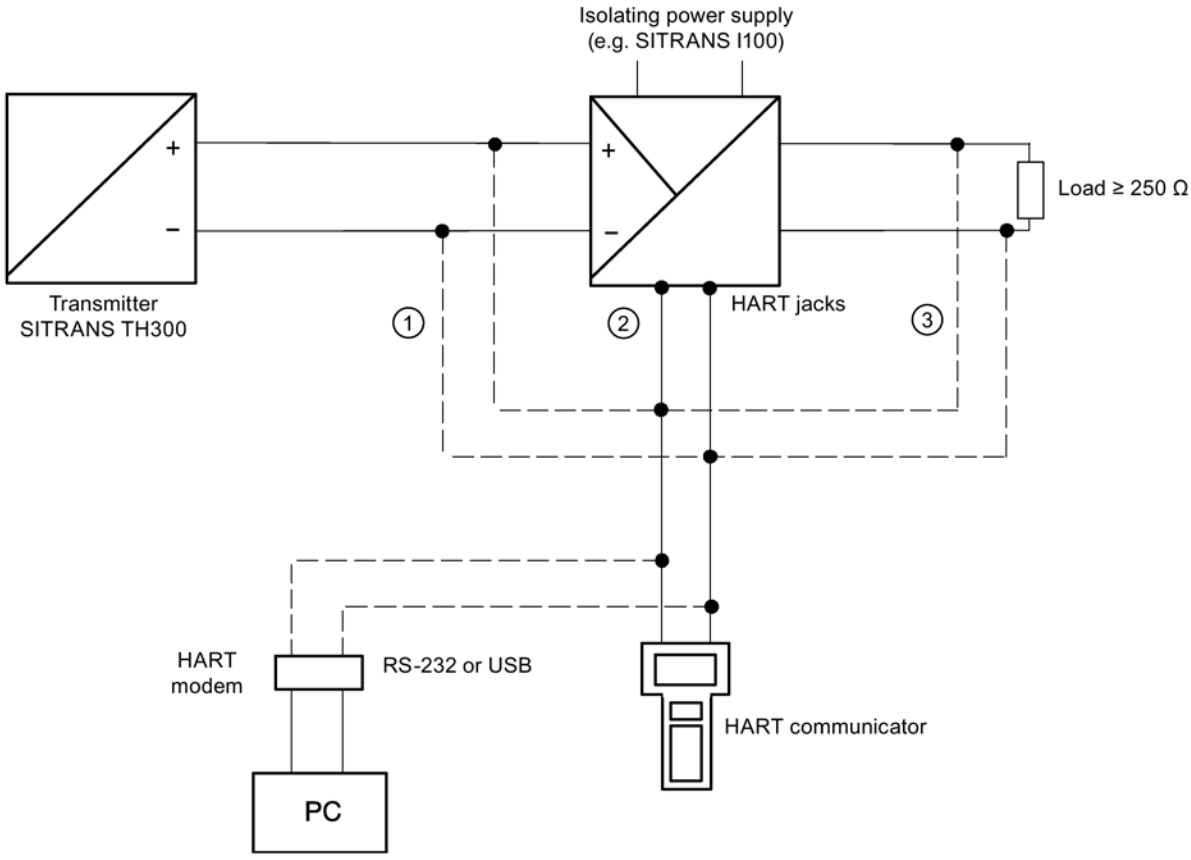

① Only intrinsically safe HART communicators or HART modems are allowed to be used with an intrinsically safe power supply.

② HART communication via HART jacks of isolating power supply

③ Load ≥ 250 Ω only relevant if HART communication takes place via this branch. Otherwise, load of 0 to 650 Ω for versions ① or ②

Figure 3-4 HART communication with supply via isolating power supply

Installation 4

4.1 Safety information

WARNING

Mounting in hazardous areas

Make sure you observe the following information before installing the transmitter:

- Install the transmitter in an enclosure appropriate for the envisaged application
- In hazardous areas, also observe the requirements specified in the Ex certificates and approvals.

WARNING

Exceeded maximum ambient or process media temperature

Danger of explosion in hazardous areas.

Device damage.

- Make sure that the maximum permissible ambient and process media temperatures of the device are not exceeded. Refer to the information in Chapter "Auto-Hotspot".

4.2 Installation in the connection head

Note

The transmitter is only designed for installation in a type B connection head or larger.

The transmitter is either secured in the base of the connection head or in the raised cover of the connection head.

Included in the transmitter's scope of delivery are:

- Springs
- Fixing screws
- Lock washers for installation on the round plate (TH200/TH300 only)

Securing the transmitter:

in the connection head cover

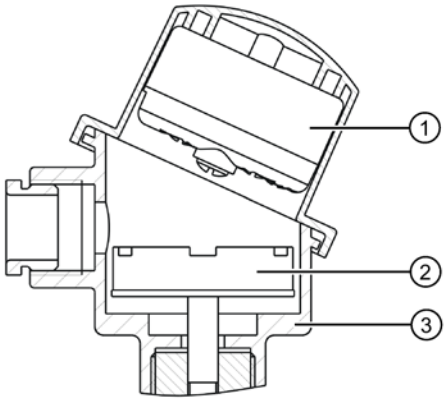

① Transmitter

③ Connection head

in the connection head base

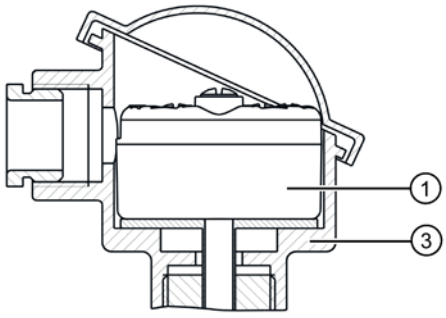

② Ceramic base of the measuring element

Note

Using the lock washers (TH200/TH300 only)

The lock washers ④ included in the delivery are only required for securely fastening the transmitter when the transmitter ② is directly installed on the round plate ③ for a temperature probe.

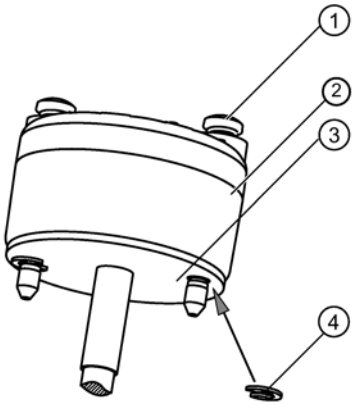

① Fixing screw M4x35

② Transmitter

③ Round plate

④ Lock washer DIN 6799 - 3.2 A2

4.3 Installation on DIN rail and G rail

Note

Fixing rings

The fixing rings included in the scope of delivery for the transmitter are not required for the installation on DIN rails or G rails.

You can either install the transmitter on a 35 mm DIN rail or on a 32 mm G rail.
DIN EN 60715 applies to DIN rails and G rails in this context. The DIN rail adapter required for installation can be ordered as an accessory under the Order No. 7NG3092-8KA.

Adhere to the ambient conditions specified in the technical data.

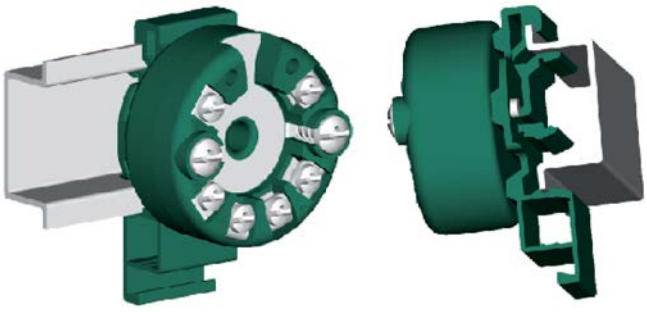

Figure 4-1 Securing the transmitter on DIN rails

Figure 4-2 Securing the transmitter on G rails

Connecting

5

WARNING

Connecting device in energized state

Danger of explosion in hazardous areas.

- Connect devices in hazardous areas only in a de-energized state.

Exceptions:

- Circuits of limited energy may also be connected in the energized state in hazardous areas.
- Exceptions for type of protection "Non-sparking nA" (Zone 2) are regulated in the relevant certificate

---

Note

Improvement of interference immunity

- Lay signal cables separate from cables with voltages > 60 V.
- Use cables with twisted wires.
- Keep device and cables distant to strong electromagnetic fields.
- Use cables with wires that have a maximum cross-sectional area of 2.5 mm^2.

NOTICE

Ambient temperature too high

Damage to cable sheath.

- At an ambient temperature ≥ 60 °C (140 °F), use heat-resistant cables suitable for an ambient temperature at least 20 °C (36 °F) higher.

5.1 Safety information when connecting

⚠ WARNING

Improper power supply

Danger of explosion in hazardous areas as result of incorrect power supply, e.g. using direct current instead of alternating current.

- Connect the device in accordance with the specified power supply and signal circuits. The relevant specifications can be found in the certificates, in Chapter "Technical data (Page 65)" or on the nameplate.

5.1.1 Safety notes for connecting in hazardous TH200/300

The 4 to 20 mA input and sensor circuits are electrically isolated and have been tested with a voltage of 1.5 kV DC/1 minute.

The sensor circuit is reliably galvanically isolated from the auxiliary power supply and signal circuit, up to a peak value of the rated voltage of 60 V. Be sure to observe the construction directives valid at the construction location for electrical resources in hazardous areas. In Europe, this is the standard EN 60079-14.

Zone 0, 1, 2 in type of protection "ia/ib/ic" - intrinsic safety

- Only connect the transmitter, in accordance with the certificate of compliance, to devices certified as intrinsically-safe.
- If the connection head is made of aluminum, the requirements of EN 60079-26, section 4.3.3, must be observed for uses where the device category 1 G is required.
- The transmitter must be mounted in an enclosure in order to provide a degree of protection of at least IP20 according to EN60529

Maximum values of the auxiliary power supply and signal circuits:		
U_i = 30 V DC	I_i = 100 mA	P_i = 750 mW
L_i = 104 µH	C_i = 11 nF	

Maximum values of the sensor circuit for Ex ia:				
U_0= 6 V DC:	**I_0 = 25 mA**	**P_0 = 37 mW**		
L_0 [mH]	50	10	1	0.1
C_0 [µF]	1	1.6	2.6	4.8

Zone 2 in type of protection "nA" - non-sparking resources

- Install the transmitter in an enclosure meeting the degree of protection IP54 per EN 60529, e.g. in a type B connection head per DIN 43729.
- Adhere to the conditions for installers applicable to this type of protection.
- The maximum approved input voltage is U_n = 32 V DC.
- Take measures to ensure that the supply voltage (including transients) does not rise above 140 % of the rated voltage.

Maximum values of the sensor circuit:				
U_0= 6 V DC:	I_0 = 25 mA	P_0 = 37 mW		
L_0 [mH]	50	10	1	0.1
C_0 [µF]	1	1.6	2.6	4.8

Additional requirements for use in dust explosion protected areas

Install the transmitter in an enclosure suitable for the respective type of dust and corresponding Zone in accordance with the inspection certificate valid in your country. The enclosure shall have at least IP5x protection in accordance with IEC 60529.

WARNING

Limited range of use

If the device has been operated outside the ambient conditions specified for potentially explosive atmospheres, you may no longer operate the device in potentially explosive atmospheres. Make sure to permanently mask all Ex markings on the nameplate.

5.2 Connecting the auxiliary power supply

Procedure

Connect the wires for the auxiliary power supply to terminals "1"(+) and "2"(-). Ensure that the polarity is correct. The device is reverse polarity protected.

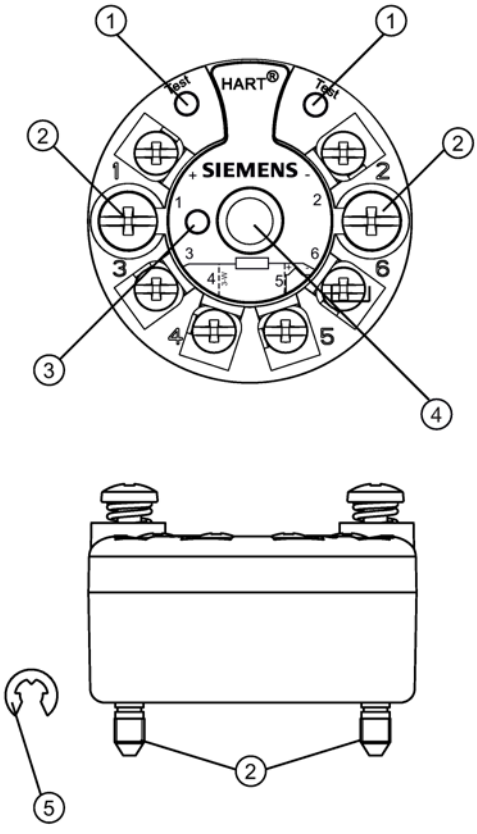

① Test terminal
② Fixing screw M4x35
③ LED
④ Internal diameter of center hole 6.3 mm (0.25")
⑤ Lock washer DIN 6799 - 3.2 A2

Connections:	1 (+) and 2 (-)	Auxiliary power supply U_{aux}, output current I_{out}
	3, 4, 5, and 6	Sensor connections

Figure 5-1 SITRANS TH200/TH300 connections

5.3 Connection diagrams

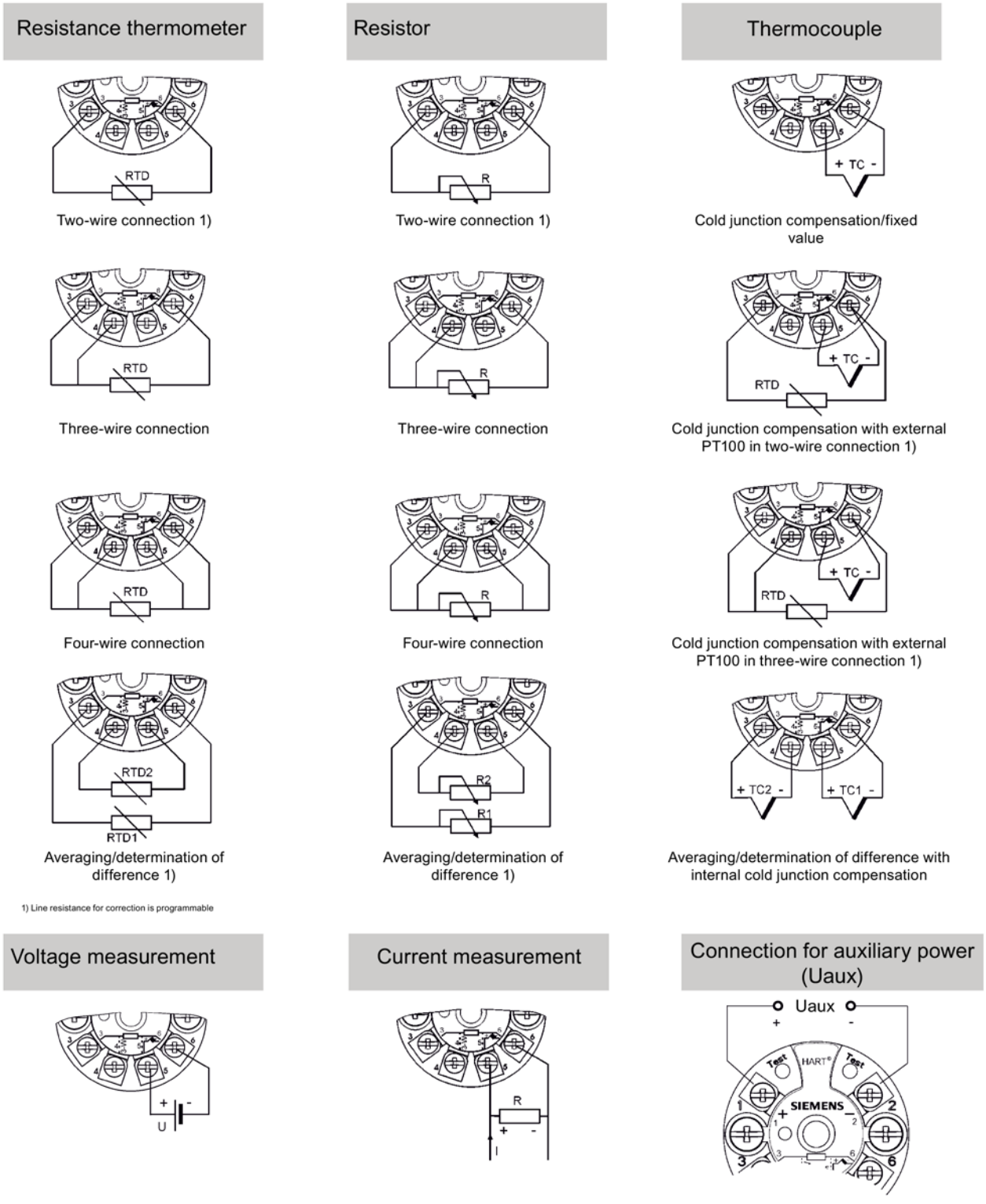

Figure 5-2 SITRANS TH200/TH300 connection diagrams

5.4 Notes on measuring current

Connect an external measuring resistor R to the transmitter connection terminals 5 and 6 if the transmitter is used for measuring current. The transmitter uses this resistor to perform the required current measurement as a voltage measurement. Therefore, the following instructions must be complied with in the parameterization software SIPROM T with SITRANS TH200 and SIMATIC PDM or HART communicator with SITRANS TH300:

- Sensor class selection = Millivolt transmitter
- Process value scale: Multiply the both the start of the scale value and the full scale value of the required current range with the resistance value R, which is connected externally to terminals 5 and 6 of the transmitter.
- **Example:** Measurement of a 0 to 20 mA current via an external resistance R of 10 Ohm
  Sensor class = Millivolt transmitter
  Process value scale:
  - *Start of scale value* = *0 mA · 10 Ω* = *0 mV*
  - *Full scale value* = *20 mA · 10 Ω* = *200 mV*

  The 4 to 20 mA output current now follows the profile of the sensor input, the 0 to 20 mA current signal.

If, for a current measurement, the measured values are called up via the digital interface, e.g. HART with SITRANS TH300, then the operating software displays the measurement data as a voltage signal in the unit mV. The voltage signal is scaled by the factor of the externally connected resistance value R.

Operation 6

The PC is used to both assign the parameters and operate the SITRANS TH200 and SITRANS TH300. The PC is connected to the two-wire line using a suitable modem. The SITRANS TH300 can also be parameterized using a HART communicator. The signals needed for SITRANS TH300 communications in accordance with the HART protocol are superimposed on the output current in accordance with frequency shift keying (FSK).

Measurement transmitter data and data used to assign the parameters are stored in a non-volatile memory, the EEPROM.

6.1 Operation of the SITRANS TH200

Requirements

Before you use or assign parameters to the transmitter offline with SIPROM T, the following requirements must be satisfied:

- 4 to 20 mA current loop, if connected to the transmitter, is disconnected.
- The SIPROM T modem is powered via the plug-type power supply.
- The transmitter is connected to the PC via the modem.
- The display module is removed.

Procedure

1. Start SIPROM T: Start > Programs > Siemens Process Instruments > SIPROM T.
2. Select device to be parameterized: Extras > Settings > Device.
3. Set communication path: Extras > Settings > Communication path.

   Set whether your modem communicates via the RS232 or USB port.
4. Enter the device identification data.
5. Assign the input parameters:
   - Set sensor offset.
   - Define measuring limits unit.
   - Specify type of sensor connection, e.g.: "Three-wire".
   - Specify the start-of-scale and full-scale values.

6. Assign the output parameters
   - Set the analog output:

     Specify the lower and upper limits.

     Set sensor fault.
   - Set damping.
7. Transfer the modified configuration to the transmitter: click the "Download to PG/PC" button in the toolbar.

Further information can be found on the Internet in the manual for SIPROM T (http://support.automation.siemens.com/WW/view/en/23844748).

6.2 Operation of the SITRANS TH300

6.2.1 Operation with the HART modem and SIMATIC PDM

Requirements

In order to use or assign parameters to the transmitter, you require a PG/PC, the SIMATIC PDM software tool, and a HART modem. Before you assign parameters to the transmitter, the following requirements must be satisfied:

- Transmitter power supply is switched on
- The load in the circuit is at least 250 Ω.

  Refer to the circuit diagram of the figure in Chapter Communication (Page 16)
- SIMATIC PDM is installed on the PG/PC and ready for operation.

Operation with SIMATIC PDM

1. Connect HART modem to the PG/PC. Refer to HART communication with supply via isolating power supply (Page 17).
2. Connect HART modem to the transmitter output circuit.
3. Start SIMATIC PDM.

4. Set transmitter parameters.
5. Download modified settings to device.

   Further Information can be found on the Internet in the manual for SIMATIC PDM (https://support.industry.siemens.com/cs/ww/en/ps/16983/man).

6.2.2 Operation with HART communicator

Action buttons

This button switches the HART communicator on and off. When switched-on, the hand-held terminal automatically establishes communication with the transmitter. The following online menu appears on the display.

This button moves the cursor up through the menu bar. The selected menu line is indicated.

This button moves the cursor down through the menu bar. The selected menu line is indicated.

This button moves the cursor to the right through the menu bar or branches into a subroutine. The name of the selected subroutine is displayed at the top edge of the display.

This button moves the cursor to the left through the menu bar or exits a subroutine.

Function keys

Function keys F1 to F4 are located below the display. The various functions of the keys in the individual menus are displayed on the bottom edge of the display.

Alphanumeric button and shift buttons

Alphanumeric values can be entered using these buttons. The function (number or letter button) depends on the menu in question. Letters are selected by pressing the shift button first.

Refer to the operating instructions of the HART communicator for further information about operation and technical data.

Functional safety

7

7.1 Safety function

Description

Temperature measurement is the safety function of the temperature transmitters.

It applies to output currents from 4 to 20 mA.

An additional safety accuracy of 2% is to be added depending on the measurement range selected (see "SIL-Declaration of conformity"), for example:

- 2% of the maximum measurement range.
- 2% of 100 °K measurement range.

Total tolerance (safety function) = ± [application-specific measuring error + 2% safety accuracy].

The output value will be updated at least every 620 ms (filter time constant of the electrical damping = 0 s).

Safety accuracy

The safety accuracy is a threshold value to distinguish between single random failures: “no effect failures” and “dangerous failures”.

“No effect failures” have an effect on the measured value less than the safety accuracy. This effect is classified to be uncritical.

The safety accuracy together with the application-specific measurement error allows the system operator to include a margin for process monitoring. Even if a random single failure occurs that is within the safety accuracy, the system can still be safely shut down.

Example:

A silo is to be securely monitored to check that the temperature does not exceed 50°C.

Application-specific measurement error: 0.1%

Safety accuracy: 2.0%

Total tolerance: 2.1%

2.1% of 100°C (selected operation range 0°… 100°C) is approximately 2°K. If process monitoring is set to 48°C, safe shutdown is guaranteed even in the event of a single random failure within the safety accuracy.

See also

SIL-Declaration of conformity
(https://support.industry.siemens.com/cs/ww/en/view/91147908)

7.2 Safety-Instrumented system in single-channel operation (SIL 2)

Description

Only one SITRANS T device is required for single-channel operation for SIL 2.

The combination of transmitter, automation system and final controlling element forms a safety-instrumented system that performs a safety function. The emphasis of this description is on the transmitter. For information on requirements for the automation system or final controlling element, please refer to the corresponding standards.

The transmitter generates a process-related measured value that is transferred to the automation system. The automation system monitors this measured value. If the measured value violates the high or low limit, the automation system generates a shutdown signal for the connected final controlling element, which switches the corresponding valve to the specified safety position.

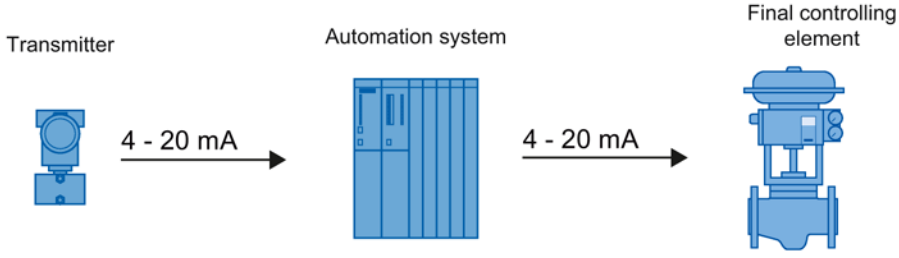

Figure 7-1 Safety-instrumented system in single-channel operation

See also

Safety Integrity Level (SIL) (Page 35)

7.3 Safety-Instrumented system in multi-channel operation (SIL 3)

Description

Two SITRANS T devices are required for multi-channel operation for SIL 3. Operation with one SITRANS T is not permitted.

The combination of two transmitters, automation system and final controlling element forms a safety-instrumented system that performs a safety function. The emphasis of this description is on the transmitters. For information on requirements for the automation system or final controlling element, please refer to the corresponding standards.

The transmitters generate process-related measured values that are transferred to the automation system. The automation system monitors these measured values. In the event of a fault, the automation system generates shutdown signals for connected final controlling elements that set the associated valve to the defined safety position. Faults are:

- Violations of the preset high or low limits
- Deviations between the two measured values

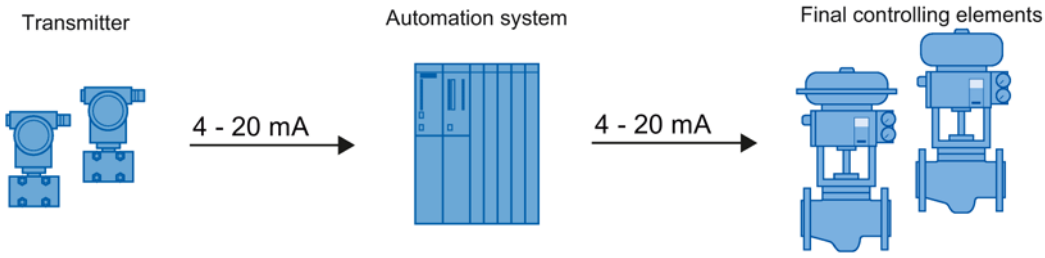

Figure 7-2 Safety-instrumented system in multi-channel operation

The automation system program must monitor the measured values of both transmitters.

As soon as the measured values differ by e.g. 2 % or more, the system must be brought into a safe state and the fault must be located.

Note

Differences in temperature ≥ 2 % will shut down the system

The two transmitters are connected to the process at different positions. Actual differences in temperature ≥ 2 % can occur when starting-up the process or if there are other temperature variations. Differences in temperature ≥ 2 % will shut down the system.

- Match the monitoring accuracy of the automation system to the process.
- Mount the two transmitters exposed to equal conditions.

7.4 Safety Integrity Level (SIL)

The international standard IEC 61508 defines four discrete Safety Integrity Levels (SIL) from SIL 1 to SIL 4. Each level corresponds to the probability range for the failure of a safety function.

Description

The following table shows the dependency of the SIL on the "average probability of dangerous failures of a safety function of the entire safety-instrumented system" (PFD_{AVG})

The table deals with "Low demand mode", for example, the safety function is performed a maximum of once per year.

Table 7- 1 Safety Integrity Level

SIL	Interval
4	$10^{-5} \leq PFD_{AVG} < 10^{-4}$
3	$10^{-4} \leq PFD_{AVG} < 10^{-3}$
2	$10^{-3} \leq PFD_{AVG} < 10^{-2}$
1	$10^{-2} \leq PFD_{AVG} < 10^{-1}$

The "average probability of dangerous failures of the entire safety-instrumented system" (PFD_{AVG}) is normally split between the three sub-systems in the following figure.

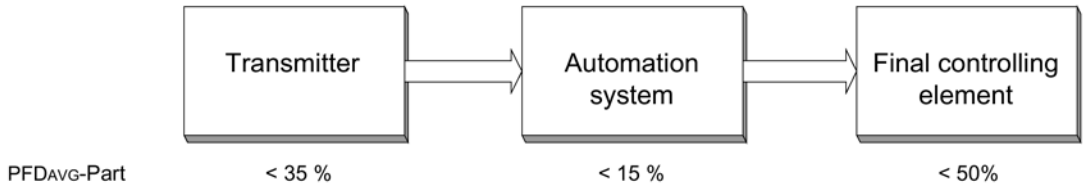

Figure 7-3 Example of PFD distribution

The following table shows the achievable Safety Integrity Level (SIL) for the entire safety-instrumented system for type B subsystems depending on the safe failure fraction (SFF) and the hardware fault tolerance (HFT).

- Type B subsystems include analog transmitters and shut-off valves with complex components, e.g. microprocessors (also see IEC 61508, Part 2).
- For detailed information on values and hardware/firmware versions for your device, refer to the manufacturer declaration for the device (Declaration of Conformity, Functional Safety according to IEC 61508 and IEC 61511): Certificates (http://www.siemens.com/processinstrumentation/certificates).

SFF	HFT		
	0	1 (0) [1]	2 (1) [1]
< 60 %	Not permitted	SIL 1	SIL 2
60 to 90 %	SIL 1	SIL 2	SIL 3
90 to 99 %	SIL 2	SIL 3	SIL 4
> 99 %	SIL 3	SIL 4	SIL 4

[1] As per IEC 61511-1, Chapter 11.4.4

According to IEC 61511-1, Chapter 11.4.4, the hardware fault tolerance (HFT) can be reduced by one (values in brackets) for sensors and final controlling elements with complex components if the following conditions are applicable for the device:

- The device is proven in use.
- The user can configure only the process-related parameters, for exemple, control range, signal direction in case of a fault, limiting values, etc.

- The configuration level of the firmware is blocked against unauthorized operation.
- The function requires SIL of less than 4.

The device fulfills these conditions.

See also

General functional safety (http://www.siemens.com/safety)

Functional safety in process instrumentation (http://www.siemens.com/SIL)

7.5 Settings

Safety-relevant parameters

This table offers you an overview of which safety-relevant parameters must be set.

These parameters depend on which type of sensor you have activated in SIMATIC PDM[1]:

Select a type of sensor	RTD or Ohm input	TC or mV input
Broken wire monitoring	ON (by default)	ON
Short-circuit monitoring[2]	ON	Not available
Current Output Scaling	Lower Limit: 3.8 mA	
	Upper Limit: 20.5 mA	
Fault Current	22.8 mA or 3.6 mA	

1) SIMATIC PDM parameter names could differ from those parameter names in SIPROM T. Therefore, in case of using SIPROM T, please consult the SIPROM T Operating Instructions.

2) Short circuit threshold shall be ≤ 5 Ohm

Current sensor function and simulation function (only available in SITRANS TH300 via SIMATIC PDM)

The use of the current sensor function and the simulation in safety-related operations can result in undesirable operating states.

The use of both functions is not permitted during safety-related operations.

See also

Functions (Page 43)

7.6 Safety characteristics

The safety characteristics necessary for using the system are listed in the "SIL-Declaration of conformity". These values apply under the following conditions:

- The temperature transmitters that are described in this manual are only used in applications with a low demand rate for the safety function (low demand mode).
- The communication is used for the following purposes only:
  - Device configuration
  - Reading diagnostic values
  - However, the communication is not used for operations critical to safety. In particular, the simulation function must not be activated in safety-related operation.
- The devices are operated differently depending on which serial interface is used for the device parameterization. Please consider the information in Chapter Operation (Page 29).
- The safety function test was completed successfully.
- The transmitter is protected against unwanted and unauthorized changes/operation.
- The current signal of 4 to 20 mA of the transmitter is evaluated by a safe system.
- Upper and lower fault current shall be checked by the safe system.
- The specified error rates apply to the typical demand of an industrial environment as in IEC 60654-1 class C. IEC 60654-1 class C means a protected place of application, with an average temperature of max. 40 °C for an extended period of time.
- The calculation of error rates is based on a Mean Time to Repair (MTTR) of 72 hours.

The maximum lifetime of the devices in a safety application is 20 years. Replace the device after this time.

Special points to note for multi-channel operation (SIL 3)

- Two transmitters are required for multi-channel operation in accordance with SIL 3.
- The automation system must monitor the measured values of both transmitters. The system must be put into safe state as soon as the measured values differ too greatly.

7.7 Maintenance/Checking

Interval

We recommend checking the function of the temperature transmitter annually.

Checking the safety function

We recommend for transmitter (both transmitters for SIL3):

- Checking the status for warnings and alarms.
- Checking the upper and lower alarm current values.
- Performing a 2-point calibration.
- Check the measuring accuracy, for example, with a sensor calibration. The measuring accuracy depends on the type of sensor (please refer to the Chapter Technical data in the operating instructions of your device.
- Checking the safety function trigger.

Checking safety

Check the safety function of the entire safety circuit in line with IEC 61508/61511 regularly. The testing intervals are determined during the calculation for each individual safety circuit in a system (PFD_{AVG}).

Commissioning 8

⚠ WARNING
Missing type of protection If the transmitter is not operated with an intrinsically-safe power supply, the type of protection "Intrinsic safety" is no longer guaranteed and the intrinsically-safe approval may be revoked. Permanently erase, therefore, the irrelevant types of protection on the nameplate before commissioning to ensure that erroneous deployment is avoided.

Procedure

1. Program the transmitter's operating data according to the actual requirements.

   If applicable, enter the changed operating data on the additional plate on the enclosure.
2. Assemble the transmitter.
3. Connect the sensor to the power supply, see Chapter "Connecting (Page 23)".
4. Turn on the auxiliary power supply.
5. Wait about 10 seconds. After this start-up time the transmitter is operational.

Note

Warming-up

To obtain exact measured values, the transmitter needs to be allowed to warm up for five minutes or so after the power supply has been switched on.

8.1 LED operating indicator

- Operating indicator does not light: No supply voltage
- Constant green light: Everything OK, normal error-free operating state
- Constant/flashing red light: Disrupted operation
  - Flashing (ca. 2 Hz) red light: Indication of faults independent of the device, e.g. wire break, sensor short circuit, violation of sensor limits
  - Constant red light: Indication of errors in the device, e.g. **RAM-, ROM-, EEPROM-, CHECKSUM-, WATCHDOG-, STACK error** or violation of the permitted ambient temperature limits, and minimum supply voltage not reached.

Functions 9

9.1 General information

You can operate the SITRANS TH300 either via the SIMATIC PDM parameterization software or via the HART communicator. You can operate the SITRANS TH200 via the SIPROM T parameterization software.
The following functions are available to you when operating the SITRANS TH300/TH200:

- identification
  - Information on operational reliability: TAG, description, message, assembly number
- Device data; this information is read-only
  - Manufacturer and product name
  - Order number, device serial number
  - Revision numbers for firmware and hardware revision
- Information about the measuring procedure
  - Sensor class and sensor type, e.g. Pt100 resistance thermometer or thermocouple type B
  - Sensor factor
  - Sensor characteristic curve, e.g. linear temperature
  - Measuring range and measuring unit
- Information on measurement interface
  - Interface type: standard, differential or averaging circuit
  - Connection type/sensor connection: two-wire, three-wire or four-wire input with resistance-type transmitters
  - Resistors for line compensation
  - Offset to the measurement signal
  - Additional information for the cold junction in thermocouples: internal, external or fixed
  - Enable/disable of wire break or short circuit test
- Information about the output signal
  - Filter time constant for noise suppression attenuation
  - Output limit values: alarm and saturation limits
- Certificates and approvals
  - The following information is read-only: information on whether the transmitter is allowed to be operated in intrinsically safe mode or not. This function can only be performed using the SIMATIC PDM parameterization software or with the HART communicator.

- Free material parameters: boxes for describing the connected sensor in more detail
  - Type of sensor
  - Composition of the protective tube
  - Length of the protective tube
  - Screw thread / installation flange
  - Supplier / manufacturer
  - F no. of sensor
  - Order number
- Other functions that can be set in the parameters are:
  - Min/max pointer functions
  - Sensor calibration function with selectable trimming range within the limits of the measuring range
  - Trimming the analog output: from 4 to 16 mA with SITRANS TH200, from 4 to 20 mA with SITRANS TH300
  - Factory reset: resetting the operating data to the factory settings
  - Simulation of measurement input. Only in SITRANS TH300: electronics temperature and analog output.
  - Only in SITRANS TH300: individual password protection

The operating data are stored in a non-volatile memory, the EEPROM.

9.2 Broken wire monitoring

Broken wire monitoring on a specific measurement channel can be performed for thermocouples and millivolt transmitters. Break monitoring is permanently active in resistance thermometers and resistance-type transmitters. No reference temperature of the internal sensor which measures the electronics temperature can be obtained if there is a broken wire.

When broken wire monitoring is switched on, all sensor cables are permanently monitored for broken wires. The programmed fault current, 3.6mA to 23mA, is output in the event of an error.

Note

If a broken wire occurs when broken wire monitoring is switched off, invalid values may be obtained for the measured value and the internal electronics temperature in the min/max pointer pairs and their runtime meters.

9.3 Short-circuit monitoring

Short circuit monitoring on a specific measurement channel is only possible with resistance thermometers and resistance-type transmitters. The threshold value for the short circuit check can be set in the parameters.

The programmed fault current, 3.6mA to 23mA, is output in the event of a sensor short circuit.

9.4 Line compensation

Trimming the line resistance values can be performed in the following measurements:

- Resistance thermometer or resistance-type transmitter in two-wire connection
- Resistance thermometer or resistance-type transmitter for calculating differential value or mean value
- Thermocouple with external cold junction with Pt100 in two-wire connection

The trimming is performed by numerical preset of the measured line resistance. The line resistance is the combined total of sending and return conductors.

9.5 Type of characteristic curve (rising or falling)

The type of the characteristic curve at the 4 to 20 mA analog output can be selected (rising or falling). The characteristic curve type is defined as follows by setting the parameters for the start of scale value and full scale value:

- Rising characteristic: Full scale value is greater than start of scale value.
- Falling characteristic: Full scale value is less than start of scale value.

9.6 Measured value offset

An offset response on a specific measurement channel can be set in the parameters for applications in which the process variable to be measured cannot be measured directly at the measuring point.

9.7 Sensor factor

The sensor factor is used to adapt the characteristic curve when resistance thermometers are connected in series or parallel and when thermocouples are connected in series. You must multiply the sensor factor with the basic series of the resistance thermometer or thermocouple. Values from 0.25 to 10.0 can be set as the scaling factor in resistance thermometers, while values from 1 to 10 can be set for thermocouples.

Example 1: 3 x Pt500 parallel: Sensor factor= 5/3 = 1.67 (basis is Pt100)

Example 2: 4 x TC serial: Sensor factor = 4 x 1 = 4

9.8 Cold junction compensation with thermocouples

In order to measure the cold junction for thermocouples, you can choose between the following cold junction compensation versions:

- Internal: in this case, the thermocouple or the compensating line is directly connected to the transmitter. The cold junction temperature is obtained by an internal Pt100.
- External with fixed value: specify the external cold junction temperature, e.g. of a thermostat, as a fixed value. The transmitter then compensates according to this constant cold junction temperature.
- External with Pt100: an external Pt100 measures the cold junction temperature in this version. You can connect the Pt100 to the transmitter in two-wire or three-wire input. The cold junction is compensated on the basis of the current temperature of the external Pt100.

9.9 Calculation of differential value/mean value

The differential and averaging circuit interfaces have the following special features compared to the standard connection:

Setting the start of scale value and full scale value:

- Enter the start of scale value and full scale value for both individual sensors first. The start of scale value and full scale value are the same for both sensors. It is not possible to assign different measuring ranges for the individual sensors in the parameters. Tip: use the largest measuring range.
- Following this, assign the parameters for the start of scale value and full scale value for the differentiation or the average value measurements.

Sensor calibration:

- Trim the individual sensors at the selected limits of the measuring range. The differentiation or average set in the parameters cannot be trimmed.

9.10 Electrical damping

You can set the filter time constant of electrical damping to a point within a range from 0 to 30 s.

9.11 Current simulator function (only in SITRANS TH300)

- You can switch the transmitter to constant current mode for test purposes. In that case, the output current no longer corresponds to the process variable.
- Using the operating software, you can set the value of the constant current for:
  - 4 mA
  - 20 mA
  - "Other value"; this value can be selected at will, the setting range is between 3.6 to 23 mA.

9.12 Alarm current

This function is used to set the magnitude of the alarm current. The alarm current signals a sensor fault or a hardware/firmware fault.

The intensity of the alarm current can be freely selected within the preset limits of the current control range of 3.6 mA to 23 mA. The upper and lower limit of the linear control range can also be freely selected within the preset limits of the current control range of 3.6 mA to 23 mA.

One example of this is shown in the following diagram. The specified accuracy values of the output signal only apply to the corresponding nominal ranges.

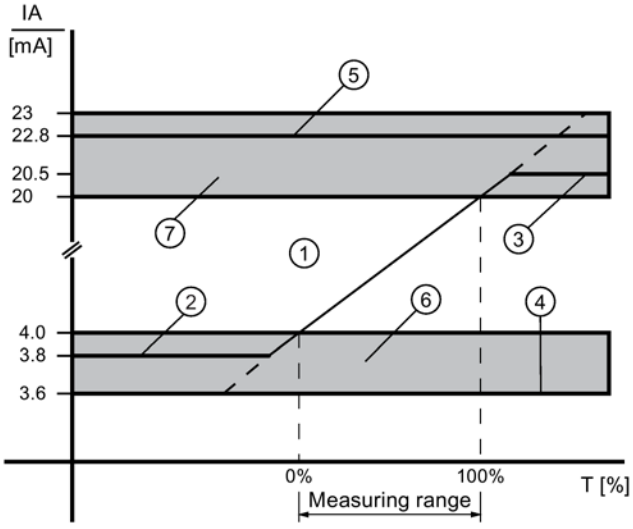

① Linear control range
② Lower limit of the control range (default value = 3.80 mA)
③ Upper limit of the control range (default value = 20.5 mA)
④ Lower fault current value (default value = 3.6 mA)
⑤ Upper fault current value (default value = 22.8 mA)
⑥ Recommended setting range for lower fault current range and lower control range limit
⑦ Recommended setting range for upper fault current range and upper control range limit

Figure 9-1 Current limits with output signal 4 to 20 mA

9.13 Sensor calibration

9.13.1 Sensor calibration (one point)

This function allows the characteristic curve of the sensor that is connected to be shifted to intersect the zero point. This allows calibration of the start of scale value of the input sensor. This does not affect the measuring span.

Entering a one point trim is equivalent to entering a sensor offset. The result of the one-point trim is saved in the "offset sensor" variables.

9.13.2 Sensor calibration (two point)

This function allows the characteristic curve of the sensor that is connected to be shifted to intersect two calibration points. The results are then correct measured values at the sensor trim points. A two point trim makes it possible to reduce the proportion of errors due to the characteristic curve.

9.13.3 Trimming the lower sensor calibration (trim) point

Trimming the lower sensor trim point

With this function:

- You apply the process variable, e.g. temperature or resistance - on which the lower sensor calibration should be performed - to the transmitter input.
- You can use the operating software to instruct the transmitter to accept this process value. SITRANS TH200 uses the operating software SIPROM T; SITRANS TH300 uses the operating software SIMATIC PDM or the HART communicator.

The acceptance of this process value is represented by an offset shift to the characteristic curve, see B in the "Sensor calibration" diagram.

9.13.4 Trimming the upper sensor trim point

Trimming the upper sensor trim point

With this function:

- You apply the process variable, e.g. temperature or resistance - on which the upper sensor calibration should be performed - to the transmitter input.
- You can use the operating software to instruct the transmitter to accept this process value.

The acceptance of this process value is represented by a gradient correction to the characteristic curve, see C in the "Sensor calibration" diagram. The lower sensor trim point is not affected by this.

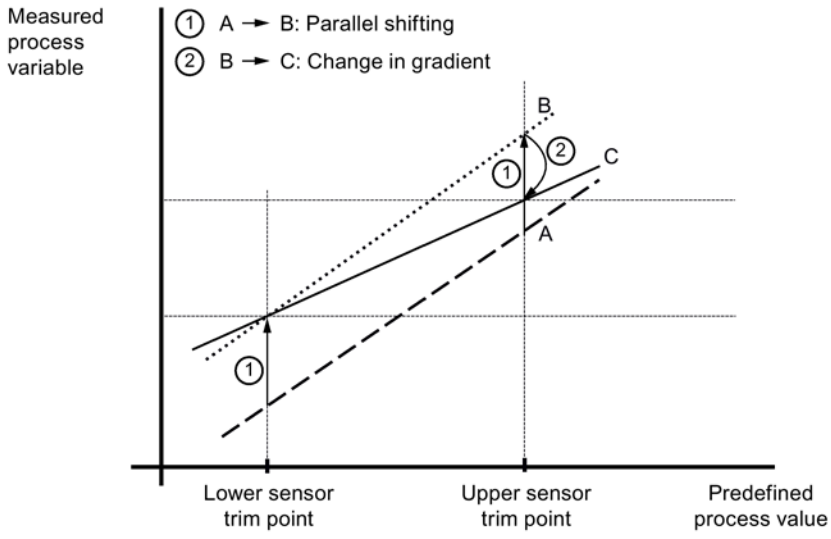

A Output curve

B Characteristic curve after lower sensor calibration

C Characteristic curve after upper sensor calibration

Figure 9-2 Sensor calibration

Note

If any of the following device parameters is changed by re-parameterization, a double point sensor calibration of SITRANS TH200/TH300 performed specifically for a customer is automatically reset:

- Sensor class
- Sensor type
- Interface
- Sensor connection
- Sensor factor

A double point sensor calibration performed by the user is also reset if the device is restored to its factory settings.

The sensor calibration can be performed both for measurement channel 1 and for measurement channel 2 in the differentiation or averaging interface type.

9.14 Current simulator calibration (digital-to-analog trim)

9.14.1 Function

This function allows you to calibrate the current output by the transmitter regardless of the sensor circuit. This function allows compensation of inaccuracies in the process chain downstream from the transmitter. The trim can only be performed as follows:

- Device version 200: at 4 mA and at 16 mA
- Device version 300: at 4 mA and at 20 mA

The following figure shows the principle of trimming using the example of the 4 to 20 mA current output.

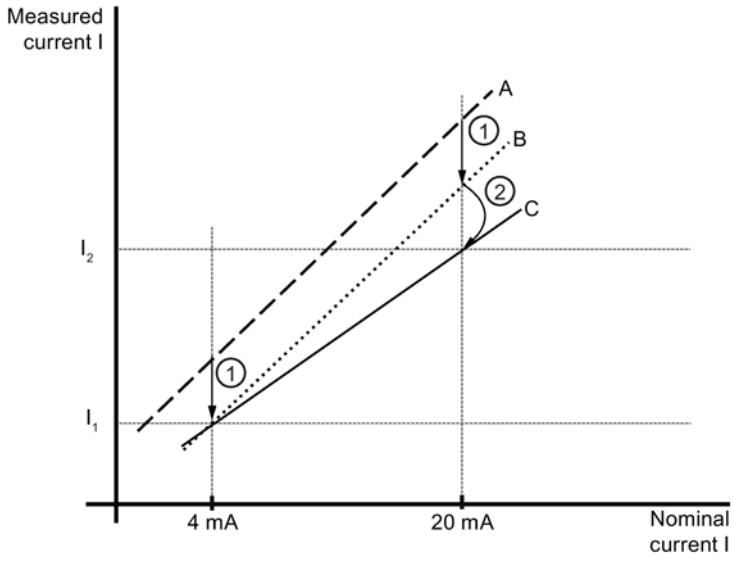

O Output characteristic

B Characteristic curve after current transmitter trim 4 mA

C Characteristic curve after current transmitter trim 20 mA

① A→B: Parallel offset

② B→C: Change in gradient

Figure 9-3 Current transmitter trim

9.14.2 Application example: Current input calibration at 4 mA and 20 mA

Note

The multimeter used must have a higher accuracy class than the transmitter.

Trim at 4 mA (offset correction)

1. Use the menu item D/A trim to assign 4 mA output to the transmitter.
2. Read the measured value at the ammeter.
3. Enter the measured current value using the operating software.

   The transmitter uses this value for offset correction of the current.

Trim at 20 mA (gradient correction)

1. Use the menu item D/A trim to assign 20 mA output to the transmitter.
2. Read the measured value at the ammeter.
3. Enter the measured current value using the operating software.

   The transmitter uses this value for gradient correction of the current.

   The value for 4 mA is not affected by this.

9.15 Special characteristic curve

The transmitter makes it possible to connect sensors to the device. Sensor characteristic curves valid for a large number of sensors are already programmed in the device.

Nevertheless, there are sensors, e.g. Cu100, for which this device does not offer sensor linearization as standard. In this case, however, it is possible to store a customer-specific special characteristic curve in the device. The sensor characteristic curve is then corrected by scaling the measured value output.

The transmitter requires pairs of values (x-values, y-values) for customer-specific characteristic curve correction. These pairs of values form sampling points and the output characteristic curve is generated in between these points by linear interpolation from the input characteristic curve. The maximum number of sampling points is restricted to 30 pairs of values. The individual pairs of values are entered as a percentage of the set measuring span.

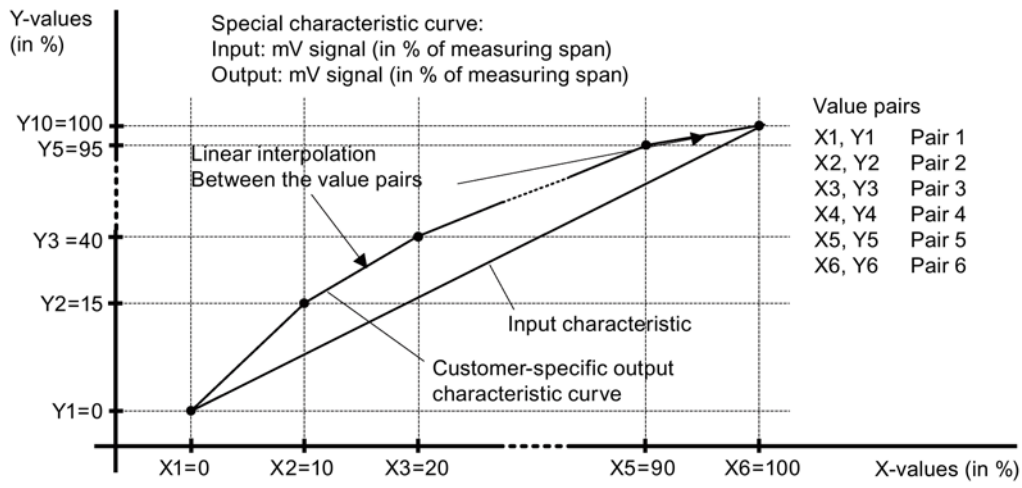

Figure 9-4 Principle of customer-specific characteristic curve correction

Notes on parameter assignment

Be sure to observe the following notes when assigning the parameters for the customer-specific special characteristic curve. These notes are irrespective of the parameter assignment software and apply to both device versions of the transmitter.

- The starting point of the characteristic curve correction is:
  - The resistance-type transmitter sensor class for the required special resistance thermometer;
  - The mV transmitter sensor class for the required special thermocouple.

  The sensor characteristic curve of the resistance-type transmitter or mV transmitter form the basis (0 to 100%) for the following characteristic curve correction.
- The individual pairs of values must always be specified in the unit % of the set measuring span.
- The first pair of values is always (X = 0 %; Y = 0 %). The last pair of values is always (X=100 %; Y=100 %). The first and last pairs of values are specified by the parameter assignment software and cannot be changed. If a correction of the first and last pair of values is required, this is only possible by means of a two point trim of the sensor.
- The x-values must rise monotonously when the characteristic curve is input, the y-values must rise or fall monotonously.
- The x-values do not have to be input in equidistant intervals.

Example

The transmitter is used for measuring a customer-specific thermocouple. The thermocouple supplies the following mV signals in this case:

- At the start of scale value: - 10 mV (equals -100 °C)
- At full scale value: 40 mV (equals +400 °C)

Proceed as follows

Note

It may be necessary to perform a sensor calibration at the start of scale value (-10 mV) and full scale value (40 mV) before the sensor characteristic is recorded and the correction values have been entered.

---

1. The mV transmitter sensor class is selected using the parameter assignment software SIPROM T or SIMATIC PDM.
2. Characteristic curve correction of the thermocouple should be performed across 6 pairs of values. The type of cold junction compensation is a fixed value = 0 °C.
3. Parameter entries

Sensor signal at transmitter input	Characteristic curve pair			Measured value [i] after characteristic curve correction
	Pair of values	X[i]	Y[i]	
-10 mV	i = 1	0 %	0 %	-100 °C
-5 mV	i = 2	10 %	15 %	-25 °C
0 mV	i = 3	20 %	20 %	0 °C
15 mV	i = 4	50 %	55 %	175 °C
35 mV	i = 5	90 %	95 %	375 °C
40 mV	i = 6	100 %	100 %	400 °C

Example for a parameter

Determining the pairs of values X[i] and Y[i] using, as an example, the pair of values i = 3 is explained below.

Calculation X[i=3]

$$\underline{\underline{X[3] =}} \frac{\text{Sensor signal [mV] - start of scale value [mV]}}{\text{Full scale value [mV] - start of scale value [mV]}} \cdot 100\% = \frac{0\text{ mV} - (-10\text{ mV})}{40\text{ mV} - (-10\text{ mV})} \cdot 100\% = \underline{\underline{20\%}}$$

The characteristic curve parameter X[3] = 0 mV corresponds with 20 % as a percentage in relation to
start of scale value = - 10 mV and full scale value = 40 mV.

Calculation Y[i=3]

$$Y[3] = \frac{\text{Temperature value [°C] - start of scale value [°C]}}{\text{Full scale value [°C] - start of scale value [°C]}} \cdot 100\% = \frac{0°C - (-100°C)}{400°C - (-100°C)} \cdot 100\% = 20\%$$

The following pair of values must be transferred to the parameter assignment software for the characteristic curve correction of the pair of values i = 3: X[3] = 20 % and Y[3] = 20 %.

9.16 Factory parameters

Using the menu command **Device → Factory trim → Reset factory settings**, the configuration of the transmitter is reset to its default values.

Note

Factory reset

- The menu command **Device → Factory trim → Reset factory settings** always resets the parameters of the transmitter to the default values in the table listed below.
- This factory reset has the same effect for "devices supplied ex stock" or "devices set customer-specifically".
- Furthermore, resetting the transmitter to its default values also resets a customer-specific digital-to-analog converter trim and sensor calibration (one point trim or two point trim).

Once a factory reset has been performed, the transmitter has the following configuration:

Parameter	Reset to value
TAG	Is not reset
Description	Is not reset
Message	Is not reset
Serial number	Is not reset
Installation date (electronics)	Is not reset
Sensor class	Resistance thermometer
Sensor type	Pt100 DIN IEC 751
Interface	Standard connection
Sensor connection	Three-wire input
Sensor factor	1.00
Sensor offset 1	0.00 °C
Start of scale value	0 °C
Full scale value	100 °C
Unit	°C
Break monitoring	ON
Short circuit monitoring	ON
Short circuit limit	10 Ω
Lower end point analog output	Is not reset
Upper end point analog output	Is not reset
Alarm value	Is not reset

Parameter	Reset to value
Linearization type	Linear to temperature
Attenuation	0.00 s
Runtime meters PV	Are all reset to 0 h
Runtime meters, field device	Are not reset
Min/max pointers PV	Are all reset to 0
Min/max pointers for electronics temperature	Are not reset
Manufacturer data sensor	Are not reset

9.17 Diagnostics

9.17.1 Diagnostic functions

The diagnostic concept of the SITRANS TH200 and the SITRANS TH300 envisages that a diagnostic warning can be set in the parameters for diagnostic functions that are used for monitoring limit values. A diagnostic interrupt can be set in the parameters for diagnostic functions that are used for monitoring error conditions.

Diagnostics interrupts

Diagnostics interrupts can be output via:

- Analog output
- Operating indicator (LED)
- Only in SITRANS TH300: HART communication

The device goes into the alarm current state. In addition, the diagnostic event is made available via the operating software. The following table summarizes all the diagnostic functions that can be set in the parameters. If multiple errors occur simultaneously, the priority settings apply. Priority 1 is the highest priority.

Diagnostic function	Priority	HART [1)]	Analog output	LED
Hardware/firmware defect				
RAM/ROM error	1	Status	On alarm value	Red
Flash/EEPROM error	1	Status	On alarm value	Red
Watchdog error	1	Status	On alarm value	Red
Electronics defect (hardware/firmware)	1	Status	On alarm value	Red
Electronics temperature outside limit [2)]	1	Status	On alarm value	Red
Undershoot of min. supply voltage	1	-	< 3.6 mA	Red
Sensor error				
Sensor breakage	2	Status	On alarm value	Red 2 Hz

Diagnostic function	Priority	HART [1]	Analog output	LED
Sensor short circuit	2	Status	On alarm value	Red 2 Hz
Measured value (PV) outside the sensor limit [3]	2	Status	On alarm value	Red 2 Hz

[1] Only in TH300

[2] A diagnostics interrupt is not triggered unless the measured value is higher or lower than the limit value by 3 °C (5.40 °F).

[3] A diagnostics warning is triggered immediately when the measured value exceeds the limit value. The diagnostic interrupt is triggered in any case if the limit value is exceeded by more than 2%.

Diagnostics warnings

Diagnostics warnings can be output via:

- Only in SITRANS TH300: HART communication

The device transmits the diagnostics event that has occurred via the operating software. The analog output value is unchanged.

Diagnostics function	Priority	HART [1]	Analog output	LED
Measured value out of the measuring range		Status	Unchanged	Green
Output saturation warning		Status	Unchanged	Green
Measured value (PV) outside the sensor limit		Status	Unchanged	Green
Electronics temperature outside the limit		Status	Unchanged	Green

[1] Only in TH300

9.17.2 Violations of specification

WARNING

Non-observance of Ex ambient conditions

If the device has been operated outside the ambient conditions specified for potentially explosive atmospheres, you may no longer operate the device in potentially explosive atmospheres.

Additionally make sure to permanently mask all Ex markings on the nameplate.

CAUTION

Operation outside the permissible temperature limits

If you use the transmitter outside the permissible temperature limits, it no longer corresponds to the specification. The transmitter then outputs the parameterized fault current.
The message "Ambient temperature error/electronics temperature error" remains set in the device even after the power supply has been switched off and on again.

Operate the transmitter within the permissible temperature limits again, and reset the message "Ambient temperature error/electronics temperature error".

Reset

If you have guaranteed by means of sensor and D/A trimming that the transmitter is working with a tolerable accuracy, you can reset the transmitter.

Use the software tool SIPROM T or SIMATIC PDM to carry out the reset:

- SIPROM T menu item for SITRANS TR200:
  Device ➜ **Device status** ➜ Device reset after ambient temperature error
- SIMATIC PDM menu item for SITRANS TR300:
  View ➜ **Device status** ➜ Device reset after ambient temperature error

Note

Incorrect configuration

The configuration will not be completely stored in the device if the supply voltage fails during a write operation to the device. The diagnostic bit "HW/FW error" is set via HART.

Faulty or incomplete configurations are signaled by continuous lighting-up of the red diagnostics LED on the device.

Repeat the loading procedure for the configuration. The device will then revert to working in accordance with the specifications.

9.18 Runtime meters in temperature classes

The SITRANS TH200 and the SITRANS TH300 offer various runtime meters. Runtime meters are used to monitor the connected process sequence.

1. Runtime meter for transmitter electronics

- Monitors the number of operating hours during which the transmitter remained in continuous operation, depending on the ambient temperature.
- The operating hours sequence of the transmitter is recorded in 9 ambient temperature ranges.
- Starts with the first commissioning at the factory.

- Runtime meter and temperature ranges cannot be reset or set by the user.
- The runtime meter is only updated if the device is in measuring mode. The runtime meter is not updated in simulation mode.

2. Runtime meter for process variable

- Monitors the sequence of the sensor connected to the transmitter in various process areas.
- The operating hours sequence of the process variable is recorded in 9 ranges. It is subdivided according to the connected sensor and its sensor limits. The user cannot set the ranges.
- The runtime meter is automatically reset if one of the following parameters is changed in the device:
  - Sensor class
  - Sensor type
  - Interface
  - Sensor connection
  - Sensor factor

The runtime meters can be read out using the parameterization software SIPROM T for SITRANS TH200 or SIMATIC PDM or HART communicator for SITRANS TH300. The runtime meters are automatically stored in the non-volatile memory once every hour. All runtime meters are available again after the next restart if the device is disconnected from its supply voltage.

9.19 Slave pointer

This device offers a total of two min/max pointer pairs by means of which the following measured variables can be monitored for the lowest and highest values:

- Min/max pointer pair for measured value (e.g. temperature differential T1-T2 with two resistance thermometers in a differential circuit)
- Min/max pointer pair for electronics temperature (cannot be reset)

Resetting the min/max pointer is only possible for the measured value. A reset is performed:

- At the user's request
- Automatically when any of the following parameters is changed in the device:
  - Sensor class
  - Sensor type
  - Interface
  - Sensor connection
  - Sensor factor

9.20 Simulation (only in SITRANS TH300)

The "Simulation" diagnostic function makes it possible to receive and process (quasi) measured data without a process value at the device. In this way, individual process sequences are run through in "cold" status to enable process statuses to be simulated. Furthermore, applying simulation values enables you to check the cable routing for the analog output.

The value to be simulated can be provided as a fixed value or in the form of a ramp function. The following simulations are possible for the measurement input and analog output:

- **Measurement input:**
  - Fixed value simulation or ramp simulation for primary process variable
  - Fixed value simulation or ramp simulation for electronics temperature
- **Measurement output:**
  - Fixed value simulation of the analog output

The simulation of the primary process variable, electronics temperature, and analog output is handled in the same way in terms of parameter assignment and function. For this reason, the following will only deal with the general simulation procedures "Fixed value" and "Ramp function", taking the example of the measurement input.

For reasons of safety, all simulation data is held only in the user memory. This means that when the device is restarted, any simulation that may be active will be shut down.

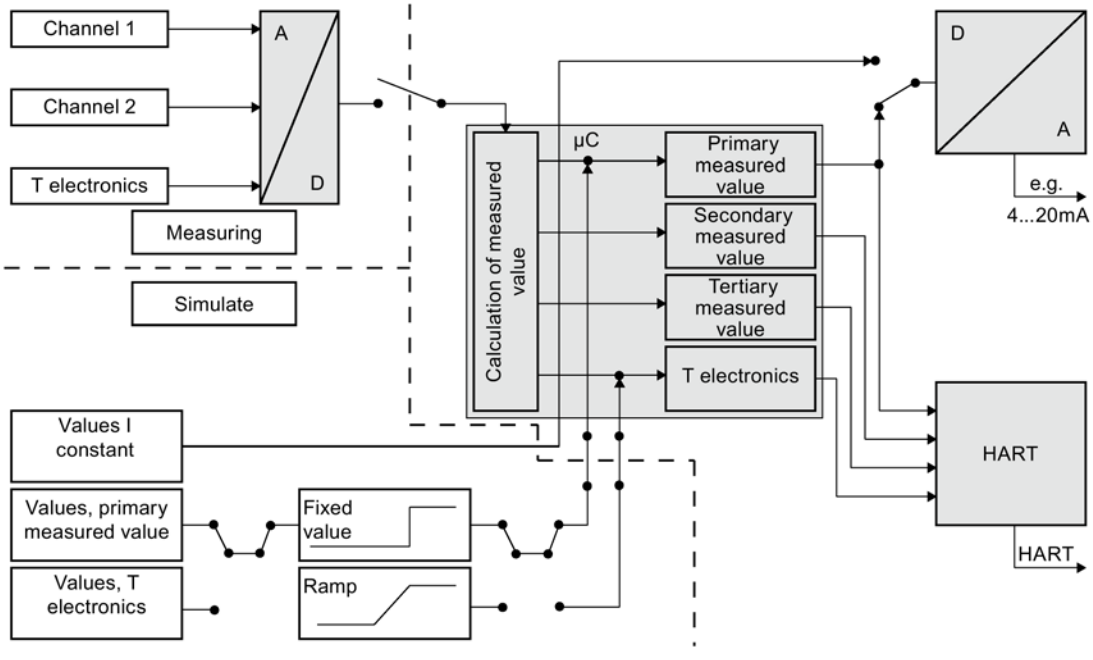

Figure 9-5 Block diagram of simulation

Simulation measurement input

Note

Simulation

- While simulation is activated, the transmitter will not react to changes in the sensor input signals.
- If the internal electronics temperature is to be simulated, the device parameters are not allowed to be set to "Thermocouple with internal cold junction compensation" for this purpose. In this case, the internal electronics temperature is a measured variable and cannot be replaced by a simulation value.

- Simulation as fixed value

  You can assign fixed simulation values in the parameters for both simulation paths (primary measured value and electronics temperature) by taking the physical unit into account. The analog output adopts a value according to the specification for the primary measured value.

- Simulation with a periodic ramp function

  As well as the adjustable fixed values, you can also assign a periodically recurring ramp function in the parameters for both simulation paths. Adjustable start-of-scale and full-scale values together determine the limits between which the simulation values move with a rising or falling tendency. You can calculate the step width with the step number, which is also adjustable.

  $$\text{Step width} = \frac{\text{Upper value} - \text{lower value}}{\text{Increment}}$$

  The duration between two successive simulation values is defined by the step duration. The analog output follows the simulated values in the simulation for the primary measured value.

9.21 Individual password protection (SITRANS TH300 only)

Description

The individual password protection prevents unauthorized write access to the device.

Note

Password protection

- Change the default password immediately after commissioning the device. You will then prevent write access to the device by unauthorized persons.
- Store your new password in a secure location.
- Consult the Siemens contact person in your region to receive your "super pin".
- When you activate the password protection in the device, write protection will be set automatically after the device has been switched on.

In the condition of goods delivered, every transmitter is set with the default password **2457**. Password protection is deactivated. If you reset the transmitter to the factory setting, the current password will not be reset to the default password. Should you no longer know your password, then the data in the device can only be altered using a "super pin", therefore not using the default password. The super pin can be obtained from your regional Siemens contact person.

Procedure for writing data in a password protected device

1. Select the "Deactivate password protection" menu in the parameterization software.
2. Enter your 4-digit password. Password protection is deactivated.
3. Change the values according to your application.
4. Select the "Activate password protection" menu in the parameterization software. The device is write protected again.

The device is maintenance-free.

Note

Function check of device

If the device is located outside the building, device function must be checked after an overvoltage event.

An overvoltage event can occur, for example, during a thunderstorm.

Technical data

10

10.1 Technical data

Input

Resistance thermometer input	
Measured variable	Temperature
Sensor type	
• According to IEC 60751	Pt25 ... Pt1000
• According to JIS C 1604; a=0.00392 K^{-1}	Pt25 ... Pt1000
• According to IEC 60751	Ni25 ... Ni1000
• Special type	Via special characteristic curve (max. 30 points)
Sensor factor	0.25 ... 10 (adaptation of the basic type, e.g. Pt100, to version Pt25 ... Pt1000)
Units of measurement	°C or °F
Interface	
• Standard connection	1 resistance thermometer (RTD) in two-wire, three-wire or four-wire input
• Averaging	2 equal resistance thermometers in two-wire input for averaging the temperature
• Differentiation	2 equal resistance thermometers (RTD) in two-wire input (RTD 1 - RTD 2 or RTD 2 - RTD 1)
Connection	
• Two-wire input	Line resistance can be assigned in the parameters ≤100 Ω (loop resistance)
• Three-wire input	No trim necessary [1)]
• Four-wire input	No trim necessary
Sensor current	≤ 0.45 mA
Measuring cycle	≤ 250 ms for 1 sensor with break monitoring
Break monitoring	Always active (cannot be switched off)
Short circuit monitoring	Can be switched on/off (default value = ON)
Measuring range	Can be set in the parameters (see table in chapter Digital measuring error (Page 71))
Min. measuring span	10 °C (18 °F)
Characteristic curve	Linear to temperature or special characteristic curve

[1] Prerequisites: same resistance for all three lines.

Resistance-type transmitter input	
Measured variable	Ohmic resistance
Sensor type	Resistance, potentiometer
Units of measurement	Ω
Interface	
• Standard connection	1 resistance-type transmitter (R) in two-wire, three-wire or four-wire input
• Averaging	2 resistance-type transmitters in two-wire input for averaging
• Differentiation	2 resistance-type transmitters in two-wire input (R1 - R2 or R2 - R1)
Connection	
• Two-wire input	Line resistance can be assigned in the parameters ≤100 Ω (loop resistance)
• Three-wire input	No trim necessary [1]
• Four-wire input	No trim necessary
Sensor current	≤ 0.45 mA
Measuring cycle	≤ 250 ms for 1 sensor with break monitoring
Break monitoring	Always active (cannot be switched off)
Short circuit monitoring	Can be switched on/off (default value = OFF)
Measuring range	Setting range max. 0 ... 2200 Ω (see table in chapter Digital measuring error (Page 71))
Min. measuring span	5 ... 25 Ω (see table in chapter Digital measuring error (Page 71))
Characteristic curve	Linear to resistance or special characteristic curve

[1] Prerequisites: same resistance for all three lines.

Thermocouples input	
Measured variable	Temperature
Sensor type (thermo pairs)	
• Type B	Pt30Rh-Pt6Rh according to DIN IEC 584
• Type C	W5%-Re according to ASTM 988
• Type D	W3%-Re according to ASTM 998
• Type E	NiCr-CuNi according to DIN IEC 584
• Type J	Fe-CuNi according to DIN IEC 584

Thermocouples input	
• Type K	NiCr-Ni according to DIN IEC 584
• Type L	Fe-CuNi according to DIN 43710
• Type N	NiCrSi-NiSi according to DIN IEC 584
• Type R	Pt13Rh-Pt according to DIN IEC 584
• Type S	Pt10Rh-Pt according to DIN IEC 584
• Type T	Cu-CuNi according to DIN IEC 584
• Type U	Cu-CuNi according to DIN 43710
Units of measurement	°C or °F
Interface	
• Standard connection	1 thermocouple (TC)
• Averaging	2 equal thermocouples (TC)
• Differentiation	2 equal thermocouples (TC) (TC1 - TC2 or TC2 - TC1)
Measuring cycle	≤ 250 ms for 1 sensor with break monitoring
Break monitoring	Can be switched off
Cold junction compensation	
• Internal	With integrated resistance thermometer Pt100
• External	With external Pt100 IEC 60751 (two-wire or three-wire connection)
• External fixed	Cold junction temperature can be set as fixed value
Measuring range	Can be set in the parameters
Min. measuring span	Min. 40 ... 100 °C (72 ... 180 °F) (see table in chapter Digital measuring error (Page 71))
Characteristic curve	Linear to temperature or special characteristic curve

Millivolt transmitter input	
Measured variable	DC voltage
Sensor type	DC voltage source (DC voltage source is possible via a resistor that is connected externally)
Units of measurement	mV
Measuring cycle	≤ 250 ms for 1 sensor with break monitoring
Break monitoring	Can be switched off
Measuring range	Setting range max. -100 ... 1100 mV
Min. measuring span	2 mV or 20 mV
Overload capacity of the input	-1.5 ... 3.5 V DC
Input resistance	≥ 1 MΩ
Characteristic curve	Linear to voltage or special characteristic curve

Output

Output	
Output signal	4 ... 20 mA, two-wire line With SITRANS TH300, additionally with communication according to HART rev. 5.9
Auxiliary power supply	11 ... 35 V DC (to 30 V for Ex ia and ib; to 32 V for Ex nA/nL/ic)[1)]
Max. load	(Uaux -11 V)/0.023 A

1) for Ex Type see Ex certificate

Measuring accuracy

The digital accuracy is the accuracy following analog-to-digital conversion including linearization and measured value calculation.

The 4 to 20 mA output current is subject to an additional error arising from the digital-to-analog conversion. This error is called a digital-to-analog error.

The overall error on the analog output under reference conditions is the total of the digital error and the digital-to-analog error. Where applicable, plus the cold junction error in the case of thermocouple measurements.

Measuring accuracy	
Reference conditions	
• Auxiliary power supply	24 V ±1%
• Load	500 Ω
• Ambient temperature	23 °C
• Interfering fields	None
• Heat-up time	> 5 min
Digital measuring error	See table in chapter Digital measuring error (Page 71)
Analog output error (digital-to-analog error)	< 0.025% of the output current span (16 mA)
Fault due to internal cold junction	< 0.5 °C (0.9 °F)
Ambient temperature influence	
• Analog measuring error	0.02% of the output current span (16 mA)/ 10 °C (18 °F)
• Digital measuring error	
In resistance thermometers	0.06 °C (0.108 °F)/10 °C (18 °F)
In thermocouples	0.6 °C (1.08 °F)/10 °C (18 °F)
Influence of the auxiliary power supply	< 0.001% of the output current span (16 mA)/V

Measuring accuracy	
Influence of load	< 0.002% of the output current span (16 mA)/ 100 Ω
Long-term drift (start of scale value, measuring span)	• < 0.02% of the measuring span in the first month • < 0.2% of the measuring span after one year • < 0.3% of the measuring span after five years

Rated conditions

Rated conditions	
Ambient conditions	
Ambient temperature	-40 ... +85 °C (-40 ... +185 °F)
Storage temperature	-40 ... +85 °C (-40 ... +185 °F)
Relative humidity	≤ 98%, condensing
Electromagnetic compatibility	According to DIN EN 61326 and NAMUR recommendation NE21 See also Auto-Hotspot
Errors under EMC influence [1)]	< 0.10% of the measuring span

[1)] When assembled on a DIN rail, deviations <0.5% of the span may occur with radiated electromagnetic fields in accordance with EN 61000-4-3.

Construction

Construction	
Material	Plastic, potted
Weight	50 g (0.11 lb)
Dimensions	See chapter Dimension drawing for SITRANS TH200/TH300 (Page 73)
Cross-section of the connecting cables	Max. 2.5 mm^2 (AWG 13)
Degree of protection according to IEC 60529	
• Housing	IP40
• Terminals	IP00

Certificates and approvals

Certificates and approvals	
Explosion protection ATEX and further approval authorities	
Only the technical data listed in the certificates, e.g. PTB 05 ATEX 2040 X, applies to applications in hazardous areas.	
"Intrinsic safety" type of protection	• II 1 G Ex ia IIC T6/T4 Ga • II (1) 2 G Ex ib [ia Ga] IIC T6/T4 Gb • II (1) 3 G Ex ic [ia Ga] IIC T6/T4 Gc • II 3 G Ex ic IIC T6/T4 Gc • II 1 D Ex ia IIIC T115°C Da
"Non-sparking resources" protection type	• II 3 G Ex nA IIC T6/T4 Gc • II 3 G Ex nA [ic] IIC T6/T4 Gc
Protection against explosion according to FM for USA	
Electrical data, operating conditions and installation instructions for operation in hazardous areas can be found in the FM Certificate of Compliance no. 3024169 as well as in the associated control drawing A5E02323665B.	
	• IS / Cl I, II, III / Div 1 / GP ABCDEFG T6, T5, T4 • Cl I / ZN 0 / AEx ia IIC T6, T5, T4 • NI / Cl I / Div 2 / GP ABCDFG T6, T5, T4 • NI / Cl I / ZN 2 / IIC T6, T5, T4
Protection against explosion according to FM for Canada (cFMus)	
Electrical data, operating conditions and installation instructions for operation in hazardous areas can be found in the FM Certificate of Compliance no. 3024169C as well as in the associated control drawing A5E02323665B.	
	• IS / Cl I, II, III / Div 1 / GP ABCDEFG T6, T5, T4 • NI / Cl I / DIV 2 / GP ABCD T6, T5, T4 • NIFW / Cl I, II, III / DIV 2 / GP ABCDFG T6, T5, T4 • DIP / Cl II, III / Div 2 / GP FG T6, T5, T4 • Cl I / ZN 0 / Ex ia IIC T6, T5, T4 • Cl I / ZN 2 / Ex nA nL IIC T6, T5, T4

Factory setting

Factory setting	
Pt100 (IEC 751)	In three-wire input
Measuring range	0 ... 100 °C (32 ... 212 °F)
Fault current	22.8 mA
Sensor offset	0 °C (0 °F)
Attenuation	0.0 s

10.2 Digital measuring error

Digital measuring errors for resistance thermometers

Input point	Measuring range in °C (°F)	Minimum measuring span in °C (°F)	Digital accuracy in °C (°F)
According to IEC 60751			
Pt25	-200 ... +850 (-328 ... +1562)	10 (18)	0,2 (0.36)
Pt50	-200 ... +850 (-328 ... +1562)	10 (18)	0,15 (0.27)
Pt100 ... Pt200	-200 ... +850 (-328 ... +1562)	10 (18)	0,1 (0.18)
Pt500	-200 ... +850 (-328 ... +1562)	10 (18)	0,15 (0.27)
Pt1000	-200 ... +350 (-328 ... +662)	10 (18)	0,15 (0.27)
According to JIS C1604-81		10 (18)	
Pt25	-200 ... +649 (-328 ... +1200)	10 (18)	0,3 (0.54)
Pt50	-200 ... +649 (-328 ... +1200)	10 (18)	0,15 (0.27)
Pt100 ... Pt200	-200 ... +649 (-328 ... +1200)	10 (18)	0,1 (0.18)
Pt500	-200 ... +649 (-328 ... +1200)	10 (18)	0,15 (0.27)
Pt1000	-200 ... +350 (-328 ... +662)	10 (18)	0,15 (0.27)
Ni25 ... Ni1000	-60 ... +250 (-76 ... +482)	10 (18)	0,1 (0.18)

Digital measuring errors for resistance-type transmitters

Input point	Measuring range [Ω]	Minimum span in [Ω]	Digital accuracy [Ω]
Resistance	0 ... 390	5	0,05
Resistance	0 ... 2200	25	0,25

Digital measuring errors for thermocouples

Input point	Measuring range in °C (°F)	Minimum measuring span in °C (°F)	Digital accuracy in °C (°F)
Type B[1)]	+100 ... +1820 (212 ... 3308)	100 (180)	2 (3.6)
Type C (W5)	0 ... +2300 (32 ... 4172)	100 (180)	2 (3.6)
Type D (W3)	0 … 1750 (32 ... 3182)	100 (180)	1 (1.80)
Type D (W3)	1750 … 2300 (3182 … 4172)	100 (180)	2 (3.60)
Type E	-200 ... +1000 (-328 ... +1832)	50 (90)	1 (1.8)

Input point	Measuring range in °C (°F)	Minimum measuring span in °C (°F)	Digital accuracy in °C (°F)
Type J	-210 ... +1200 (-346 ... +2192)	50 (90)	1 (1.8)
Type K	-230 ... +1370 (-382 ... +2498)	50 (90)	1 (1.8)
Type L	-200 ... +900 (-328 ... +1652)	50 (90)	1 (1.8)
Type N	-200 ... +1300 (-328 ... +2372)	50 (90)	1 (1.8)
Type R	-50 ... +1760 (-58 ... +3200)	100 (180)	2 (3.6)
Type S	-50 ... +1760 (-58 ... +3200)	100 (180)	2 (3.6)
Type T	-200 ... +400 (-328 ... +752)	40 (72)	1 (1.8)
Type U	-200 ... +600 (-328 ... +1112)	50 (90)	2 (3.6)

1) Significant inaccuracy for measurement range between 100 °C (212 °F) to 300 °C (572 °F).

Digital measuring errors for millivolt transmitters

Input point	Measuring range in mV	Minimum measuring span in mV	Digital accuracy in µV
Millivolt transmitter	-10 ... +70	2	40
Millivolt transmitter	-100 ... +1100	20	400

Dimension drawings

11

11.1 Dimension drawing for SITRANS TH200/TH300

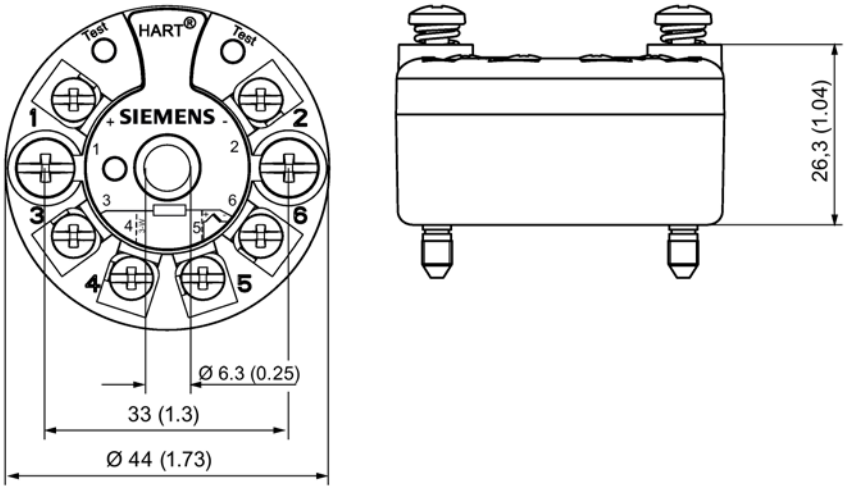

Figure 11-1 SITRANS TH200/TH300, dimensions in mm (inch)

11.2 Dimension drawing for the DIN rail adapter

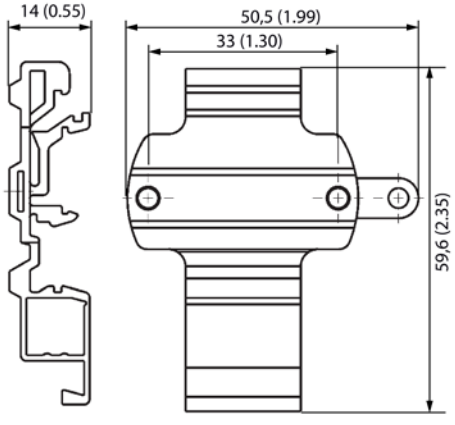

Figure 11-2 Dimensions of the DIN rail adapter (7NG3092-8KA)

Spare parts and accessories

12

Name	Order number
CD "SITRANS T - temperature transmitters" containing documentation in German/English/French/Spanish/Italian/Portuguese and the SIPROM T parameterization software	A5E00364512[1)]
Temperature transmitter SITRANS TH200 for installation in the connection head type B (DIN 43729), two-wire technology 4 to 20 mA, programmable, with galvanic isolation	
• Without protection against explosion	7NG3211-1NN00[1)]
• With protection against explosion according to: – ATEX and further approval authorities – FM ($_c$FM$_{US}$)	7NG3211-1AN00 [1)] 7NG3211-1BN00 [1)]
Temperature transmitter SITRANS TH300 for installation in the connection head type B (DIN 43729), two-wire technology 4 to 20 mA, communications capability according to HART Rev. 5.9, with electrical isolation	
• Without protection against explosion	7NG3212-0NN00 [1)]
• With protection against explosion according to: – ATEX and further approval authorities – FM ($_c$FM$_{US}$)	7NG3212-0AN00 [1)] 7NG3212-0BN00 [1)]
Modem for SITRANS TH100, TH200 and TR200, including SIPROM T parameterization software	
• With USB connection	7NG3092-8KU[1)]
HART modem 7MF4997-1DB 1)	
• With RS232 serial port	7MF4997-1DA[1)]
• With USB port	7MF4997-1DB[1)]
DIN rail adapter **(packing unit = 5 pcs.)**	7NG3092-8KA[1)]

Further designs	
Add "**-Z**" to Article number and specify Order code	Order code
Specifiy measuring range to be set (specify in plain text)	Y01
With test report (five measurement points)	C11
SIL 2 (functional safety)	C20

[1)] Can be supplied ex stock.

Appendix A

A.1 Certificate

The certificates can be found on the enclosed CD and on the Internet under:

Certificates (http://www.siemens.com/processinstrumentation/certificates)

A.2 Control drawing

Note

The maximum permissible output parameters Lo/La and Co/Ca are specified in the following control drawing (corresponding to the values in the annex A from IEC 60079-11). These parameters are not valid, if the inner inductance (Li) and the inner capacitance (Ci) of the connected sensor is more than 1% of Lo/La or Co/Ca respectively. If Ci and Li exceed these 1%-values Lo/La and Co/Ca have to be reduced to 50% where Co/Ca shall not exceed 600nF for gas group IIC and 1µF for gas group IIB. For further information refer to IEC 60079-11:2011 Ed. 6 chap. 10.1.5.2.

Confiado como secreto de empresa.
Nos reservamos todos los derechos.
Confié ☐ titre de secret d'entreprise.
Tous droits réservés.

Als Betriebsgeheimnis anvertraut.
Alle Rechte vorbehalten.

Conveyed confidentially as trade secret.
All rights reserved.

DKW0001 : Mit Pro/ENGINEER erstellt

Hazardous location

IS CL I,II,III, DIV 1, GP ABCDEFG T4/T5/T6 (USA & Canada)
IS CL I, ZN 0,1, AEx ia IIC T4/T5/T6 (USA)
Ex ia IIC T4/T5/T6 (Canada)

Ta: -40°C...+85°C/70°C/60°C

Non-hazardous location

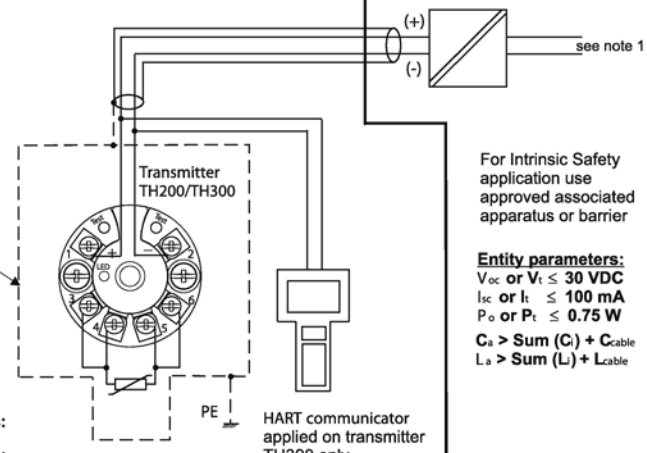

For Intrinsic Safety application use approved associated apparatus or barrier

Entity parameters:
V_{oc} **or** $V_t \leq$ **30 VDC**
I_{sc} **or** $I_t \leq$ **100 mA**
P_o **or** $P_t \leq$ **0.75 W**
C_a **> Sum (**C_i**) +** C_{cable}
L_a **> Sum (**L_i**) +** L_{cable}

Entity parameters:

Terminals 1(+), 2(-):
U_i, V_{max} **= 30 VDC**
I_i, I_{max} **= 100 mA**
P_i, P_{max} **= 0.75 W**
L_i **= 104 µH**
C_i **= 11 nF**

Terminals 3, 4, 5, 6:
U_o, V_{oc}, V_t **= 6 VDC**
I_o, I_{sc}, I_t **= 25 mA**
P_o, P_t **= 37 mW**
L_o, L_a **= 50 mH**
C_o, C_a **= 40 µF**

Attention:
Add L_i and C_i of the communicator to the values of the transmitter

Notes:
1. The nonintrinsically safe terminals (power rail) must not be connected to any device which uses or generates more than 250 Vrms or d.c. unless if has been determinated that the voltage has been adequately isolated.
2. The installation must meet the requirements of the National Electrical Code / Canadian Electrical Code
3. The SITRANS TH200/TH300 must be installed in a housing with min. IP 54 degree of protection

This document contains safety-relevant information based on technical standards (i.e. Norms, internal standards) or certifications that the apparatus is subject to and may only be altered with the approval of the norm expert (NFM)

Engineering Obligation for Delivery

Prod. family / Proizv. fam. :	TH		
Prod. group / Proizv. grupa :	SITRANS T	Fab. group / Br. Proizv. Gr. :	4780
ECO no. / Izmjena br. :	79B94858	Date / Datum :	2008-12-18
DS :	02	Author / Autor :	T. Barisic
Amend. date / Datum izmj. :	2009-10-16	Checked / Odobrio :	D. Rabatic
Modified by / Izmjenio :	D. Rabatic	Department / Odjel :	I IA SC STC
Change for / Zamjena za :	C10145-A4-X2-33		SIEMENS

Title / Naziv :
Temperature transmitter / Pretvornik temperature
SITRANS TH200/TH300
Type 7NG3211-1B*** / 7NG3212-0B***
Ex Control Drawing (FM, DIV 1, Zone 0,1)
Ex Kontrolni Nacrt (FM, DIV 1, Zone 0,1)

Item no. / Broj artikla : A5E02323665

Document no. / Broj dokumenta : A5E02323665B

Paper size / Format : A 4

Sheet / Stranica : 1 od / do 2

Doc. type / Dok. Typ :

A.3 Return procedure

Enclose the bill of lading, return document and decontamination certificate in a clear plastic pouch and attach it firmly to the outside of the packaging. Any devices/replacement parts which are returned without a decontamination declaration will be cleaned at your expense before further processing. For further details refer to the operating instructions.

A.4 Disposal

Devices identified by this symbol may not be disposed of in the municipal waste disposal services under observance of the Directive 2002/96/EC on waste electronic and electrical equipment (WEEE).

They can be returned to the supplier within the EC or to a locally approved disposal service. Observe the specific regulations valid in your country.

A.5 Technical support

Technical Support

If this documentation does not provide complete answers to any technical questions you may have, contact Technical Support at:

- Support request (http://www.siemens.com/automation/support-request)
- More information about our Technical Support is available at Technical Support (http://www.siemens.com/automation/csi/service)

Internet Service & Support

In addition to our documentation, Siemens provides a comprehensive support solution at:

- Services & Support (http://www.siemens.com/automation/service&support) where you will find support news, support documents including EDDs and software, and also support from experts.

Additional Support

If you have additional questions about the device, please contact your local Siemens representative.

Find your local contact partner at:

- Partner (http://www.automation.siemens.com/partner)

Documentation for various products and systems is available at:

- Instructions and manuals
  (http://www.siemens.com/processinstrumentation/documentation)

See also

E-mail (mailto:support.automation@siemens.com)

Index

A

Action button, 31
Additional Support, 79
Alarm current, 47
Alphanumeric key, 31
application time
    maximum, 38
Auxiliary power supply, 41
Averaging circuit, 46

B

Broken wire monitoring, 44

C

Certificate, 77
Certificates, 8
Certification, 77
Characteristic curve
    Falling, 45
    Rising, 45
characteristics
    Safety, 38
Checking, 39
Cold junction compensation
    External with fixed value, 46
    External with Pt100, 46
    Internal, 46
Correct usage, (See improper device modifications)
Coupling module, (See Modem)
Current output calibration, 51
Customer Support Hotline, 79

D

Diagnostics
    LED, 58
Differential circuit, 46
DIN rail, 21

E

Electrical damping
    Filter time constant, 47

F

Factory setting status, 55
Filter time constant
    Electrical damping, 47
Firmware, 7
Frequency shift keying, 29
FSK, 29
Function key, 31

G

G rail, 21

H

Hazardous area
    Laws and directives, 8
History, 7
Hotline, 79

I

Improper device modifications, 11
Internet, 79

L

LED operating display, 41

M

Maintenance, 39, 63
Modem, 16, 29, 75
MTTR, 38

O

Offset
    Measured value, 45

P

Parameter assignment
    Special characteristic curve, 53

Q

Qualified personnel, 11

S

Safety
    Checking, 39
Safety function
    Checking, 39
Sensor characteristic curve, 52
Sensor factor, 46
Service, 79
Shift key, 31
Short-circuit monitoring, 45
Special characteristic curve
    Calculation, 54
    Parameter assignment, 53
Support, 79

T

Test certificates, 8
Trimming
    Line resistances, 45
    Sensor, 46