Filter-regulators - Series MC

Product code: MC202-D18

Datasheet creation date: 19/05/2026 20:02

Check the most updated document online *click here*



TECHNICAL DATA

Mod.	MC202-D18
U	G1/2

Products designed for industrial applications. General terms and conditions for sale are available on www.camozzi.com.
This document contains a brief description of the products offered by Camozzi Automation at time of publication.
For more complete and up to date information about the Camozzi Automation product range, please refer to our online catalogue at https://shop.camozzi.com

Filter-regulators - Series MC

Product code: MC202-D18

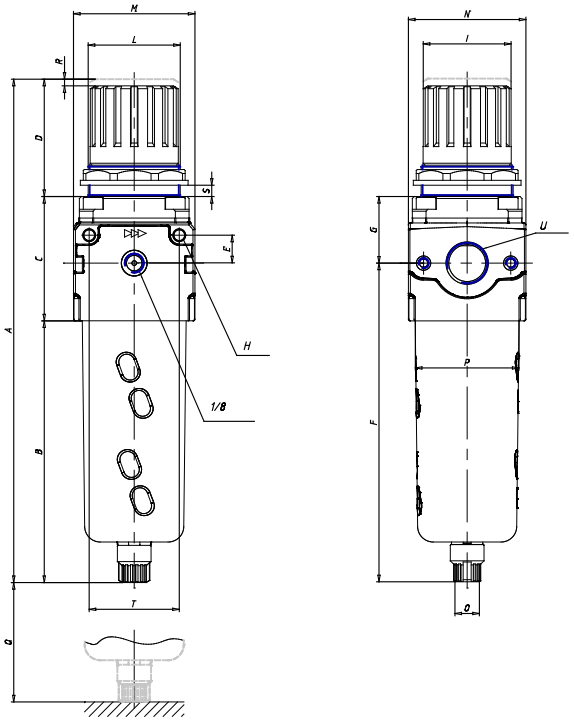

DIMENSIONS

A (mm)	256.5
B (mm)	133
C (mm)	64
D (mm)	59
E (mm)	14
F (mm)	162.0
G (mm)	35.0
H (mm)	5.5
I (mm)	45
L	47x1.5
M (mm)	62
N (mm)	59
O	G1/8
P (mm)	53
Q (mm)	72
R (mm)	3.5
S	0:9
T (mm)	46

Products designed for industrial applications. General terms and conditions for sale are available on www.camozzi.com.
This document contains a brief description of the products offered by Camozzi Automation at time of publication.
For more complete and up to date information about the Camozzi Automation product range, please refer to our online catalogue at https://shop.camozzi.com