P1RA3P63A030

RESIDUAL BLOCK, 3P - TYPE A, 63A (IΔn 30mA)

Product designation			Residual block add-on
Product type designation			P1 RA
Number of poles			3P
Number of DIN modules			3.5
Compliance			IEC
Electrical features			
Rated insulation voltage Ui		V	400
Rated impulse withstand voltage Uimp		kV	4
Rated operational voltage AC (IEC)		VAC	230/400
Rated frequency		Hz	50/60
Rated current (In)		A	63
Residual operation characteristic			A
Ambient conditions			
Operating temperature			
	min	°C	-35
	max	°C	70
Storage temperature			
	min	°C	-40
	max	°C	80
Max altitude		m	2000
Mechanical feautures			
Operating position			
	normal		35mm DIN rail
Mounting			35mm DIN rail
Tightening torque for terminals			
	max	Nm	2
	max	lbft	1.5
Terminals tool			Pz 2
Conductor section			
	min (IEC)	mm²	1
	max (IEC)	mm²	16
	min (AWG)		14
	max (AWG)		6
Weight		g	205
Frontal IP degree			IP20
Pollution degree			2
Dimensions			

The characteristics described in this document are subject to updates or modifications at any time. The descriptions, technical and functional information, illustrations and instructions in this brochure are purely illustrative, and are consequently not contractually binding

P1RA3P63A030

RESIDUAL BLOCK, 3P - TYPE A, 63A (IΔn 30mA)

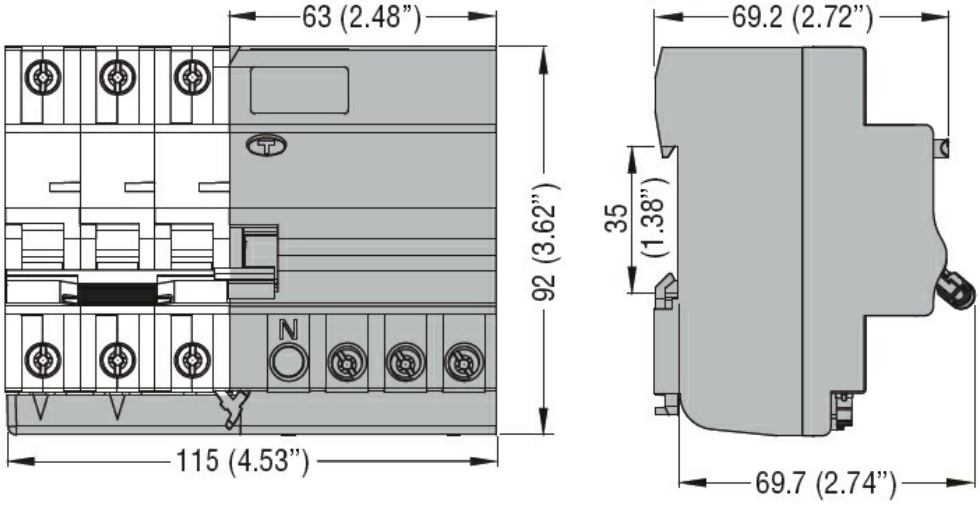

Certifications and compliance

Compliance

IEC/EN 61009-1

Certifications

EAC

TÜV-SUD

The characteristics described in this document are subject to updates or modifications at any time. The descriptions, technical and functional information, illustrations and instructions in this brochure are purely illustrative, and are consequently not contractually binding