RGB-320G

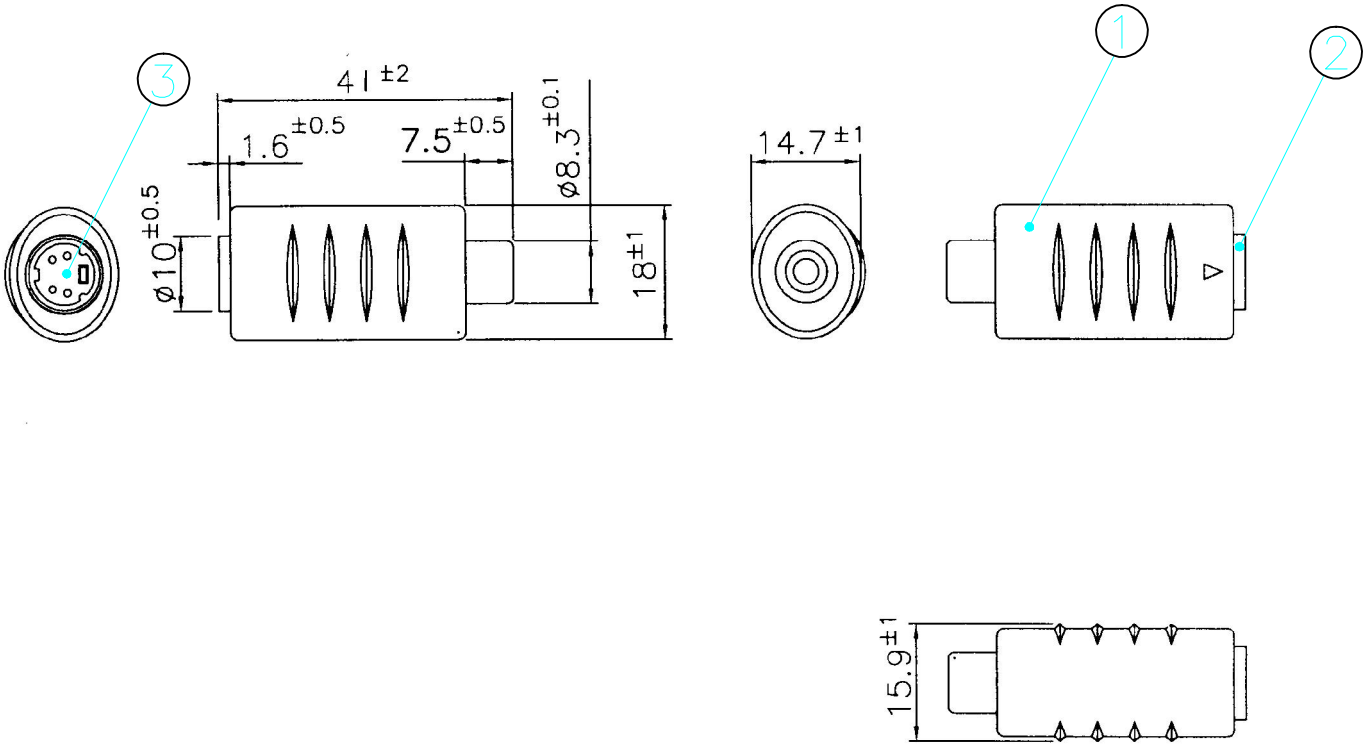

TITLE: PHONO TO SVHS COUPLER

Unless Specified,otherwise tolerance are +/-0.1mm; Remark:ROHS Requirement Applied(符合ROHS)

NO	Description	Unit	Materials	Finish/Color	PART NO.
A.	1.MOLDING	1	PVC	BLACK	
B.	2.S JACK SLEEVE	1	BRASS	GOLDED PLATED	
C.	3.S JACK INSULATOR	1	PBT	BLACK	
D.					
E.					

REV	DESCRIPTION	Issue	A	DATE:	2008/01/30
1					
2					
3					

Approved	
Check	
Drawn	陳麗華
Unit	M/M
Scale	