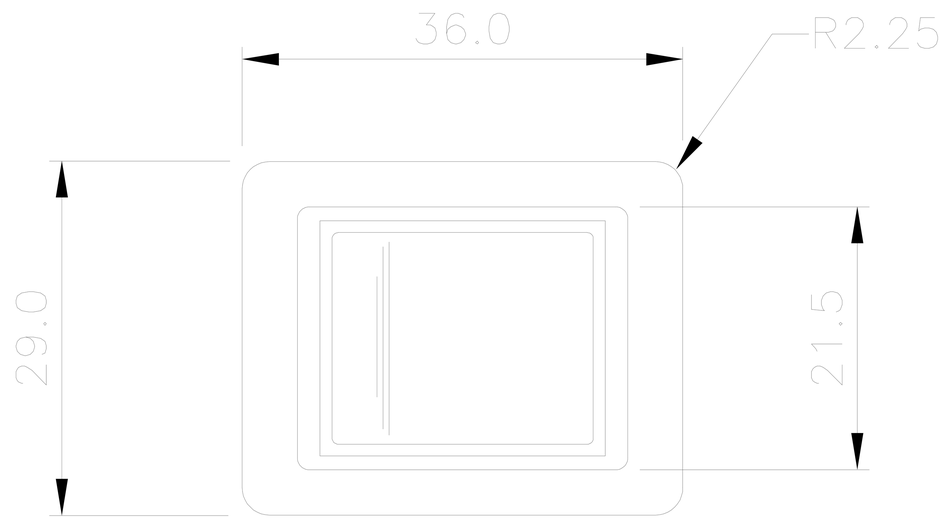

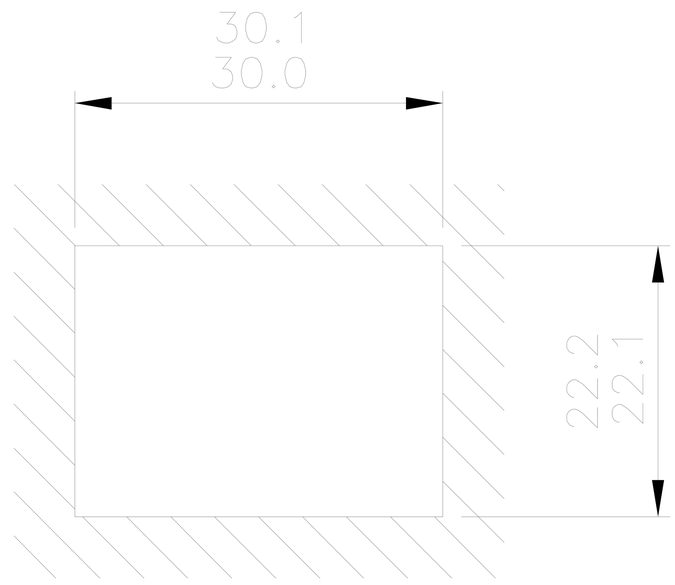

SUITABLE PANEL CUTOUT
FOR 0.75 TO 2.5
PANEL THICKNESS

PANEL THICKNESS IS
REDUCED BY 1.0mm FOR
SPLASHPROOF COVER AND
A FURTHER 0.8mm (NOM)
FOR SEALING WASHER

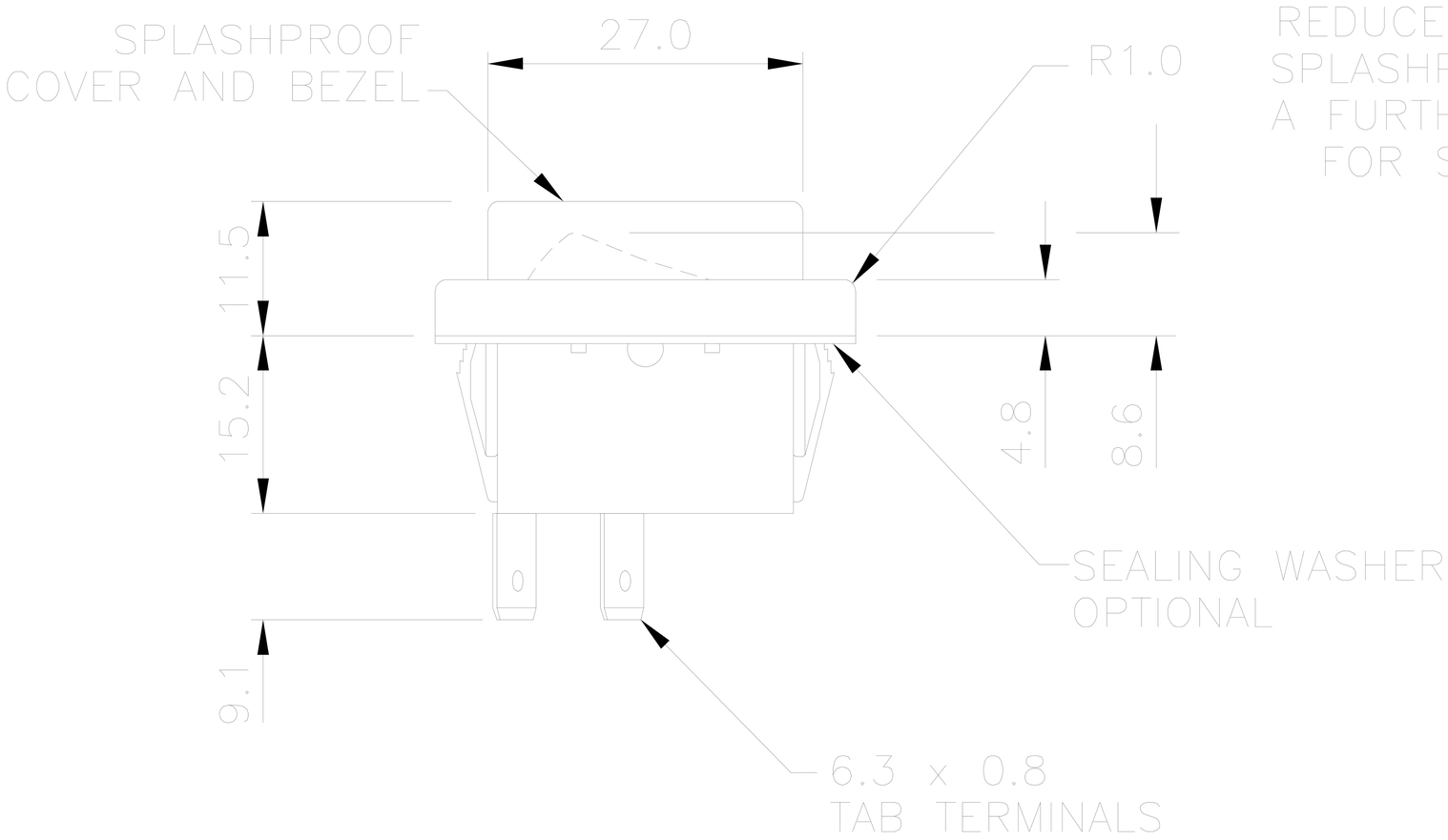

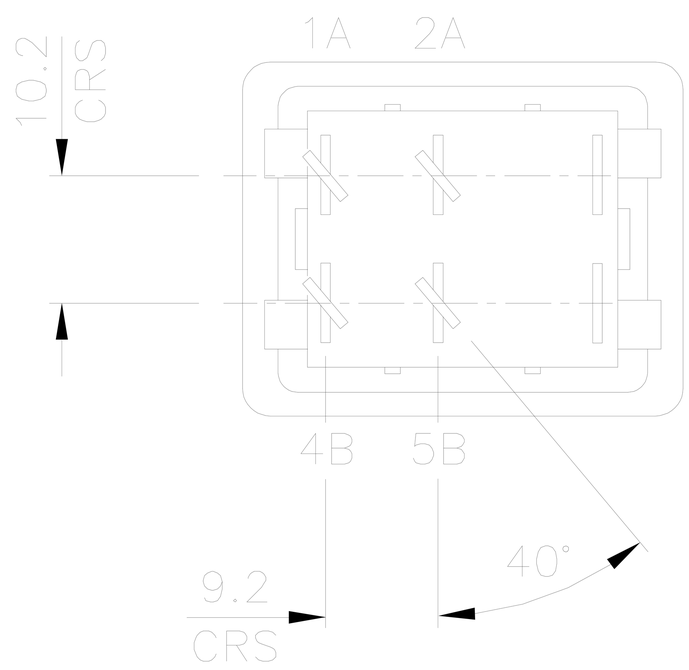

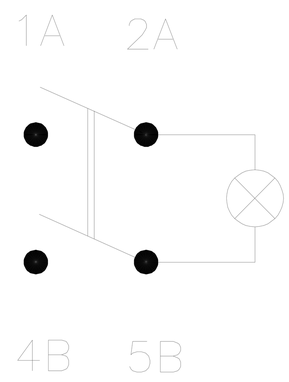

SWITCH FUNCTION
DOUBLE POLE
ON/OFF ILLUMINATED

CP061/FORM-F116 ISS 4

ISSUE/CHANGE	
1	DCR5864 14.01.03

DIMENSIONS IN MM
LIMITS – LINEAR = ± 0.3
– ANGULAR = ± 1°
UNLESS OTHERWISE STATED

DO NOT SCALE
IF IN DOUBT–ASK

DRAWN	DATE	CHECKED	SCALE
R.Taylor	14.01.03		1 : 1

DRAWN IN ACCORDANCE
WITH B.S. 308
FOR TECHNICAL INFORMATION
SEE CATALOGUE

OUTLINE DRAWING FOR

ROCKER SWITCH
HIGH INRUSH

Arcolectric
SWITCHES PLC

COPYRIGHT © RESERVED

DRAWING No

C1353ALG

A
4