5 Port Solenoid Valve

New

CE UKCA RoHS

Reduced power consumption:

0.55 W [With power saving circuit]

1.55 W [Standard]

(Conventional: 2.0 W) Note) With DC light

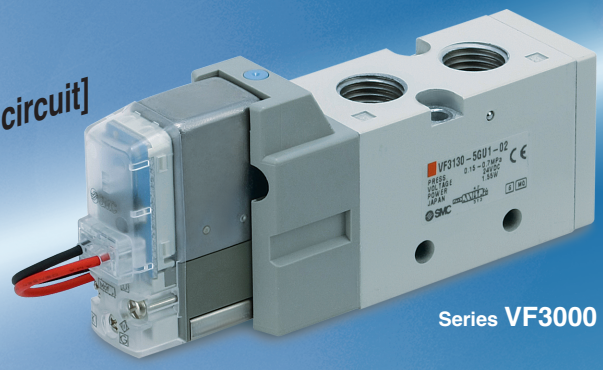

Series VF3000

Power consumption is reduced by power saving circuit.

Power consumption is decreased by approx. 1/3 by reducing the wattage required to hold the valve in an energized state. (Effective energizing time is over 40 ms at 24 VDC.) Refer to electrical power waveform as shown below.

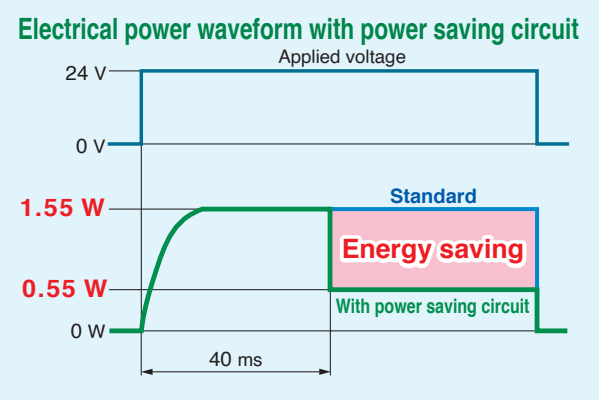

Built-in full-wave rectifier (AC)

Noise reduction

Noise is considerably reduced by changing it to DC mode with a full-wave rectifier.

Reduced apparent power

Conventional: 5.6 VA → 1.55 VA

Built-in strainer in the pilot valve

Unexpected troubles due to foreign matter can be prevented.

Note) Be sure to mount an air filter on the inlet side.

Rubber material: HNBR
Ozone-resistant specification
(The pilot valve poppet is made of FKM)

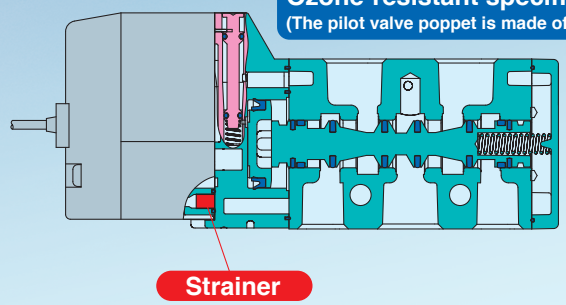

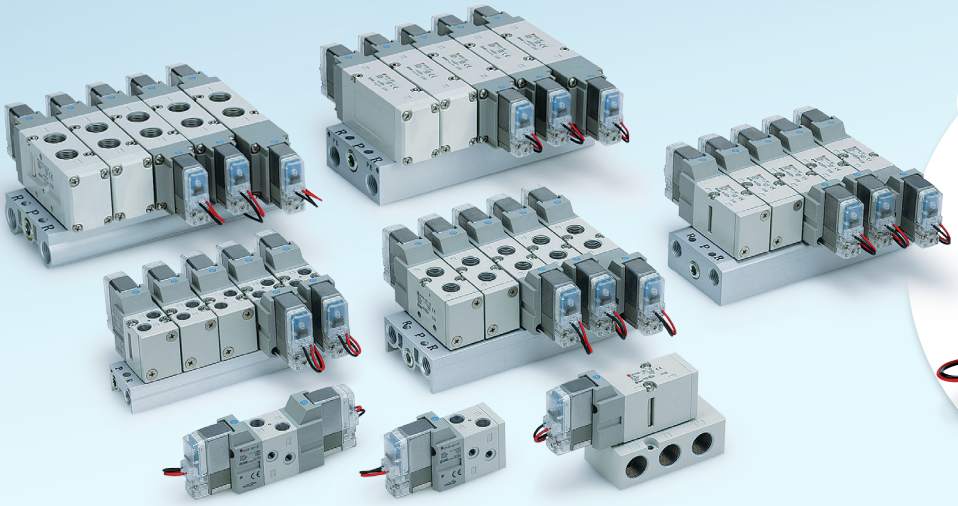

New Low wattage specification added

* VF1000/3000

Power consumption **0.35 W** (Without light)
0.4 W (With light)

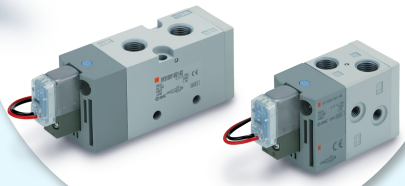

Series VF1000/3000/5000

SMC

CAT.EUS11-99C-UK

Model Selection by Operating Conditions 1

Single Unit

	Series	Sonic conductance C [dm³/(s·bar)]	Type of actuation	Port size	Voltage	Electrical entry	Light/Surge voltage suppressor	Manual override	
Body ported	VF1000 	0.76	2-position single VF1000 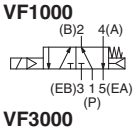 VF3000 VF5000 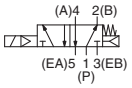 2-position double VF1000 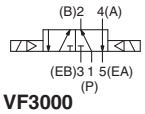 VF3000 VF5000 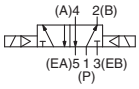 3-position closed centre 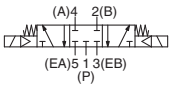 3-position exhaust centre 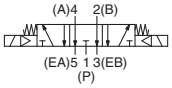 3-position pressure centre 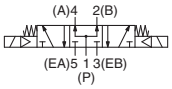	M5 x 0.8 1/8	12 VDC 24 VDC 24 VAC 100 VAC 200 VAC 110 VAC 220 VAC 240 VAC	Grommet 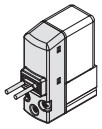 L-type plug connector 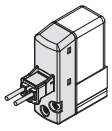 M-type plug connector 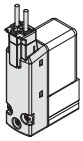 DIN terminal 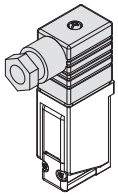 DIN (EN1753 01-803) terminal 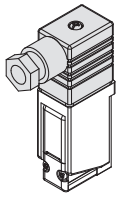 Conduit terminal 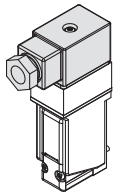	DC ■ With surge voltage suppressor ■ With light/surge voltage suppressor ■ With surge voltage suppressor (Non-polar) ■ With light/surge voltage suppressor (Non-polar) AC ■ With light/surge voltage suppressor	Non-locking push type 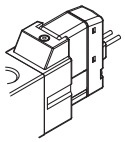 Push-turn locking slotted type 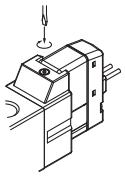	Page 1
Body ported	VF3000 	4.0		1/8 1/4					
Body ported	VF5000 	8.8		1/4 3/8					
Base mounted	VF3000 	3.1	2-position single 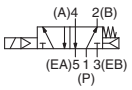 2-position double 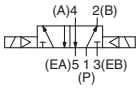 3-position closed centre 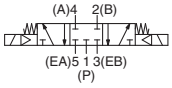 3-position exhaust centre 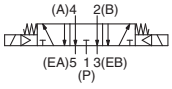 3-position pressure centre 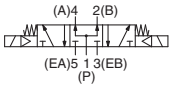	1/4 3/8				Push-turn locking lever type 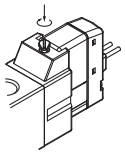	Page 15
Base mounted	VF5000 	9.4		1/4 3/8 1/2					

New Low wattage specification From page 26 **Power consumption: 0.35 W** (Without light) **0.4 W** (With light)

Model Selection by Operating Conditions 2

Manifold

	Series	EXH port type	Manifold base model	Applicable valve	Applicable stations	
Body ported	VF1000 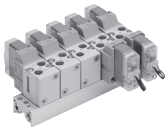	Common EXH	VV5F1-30 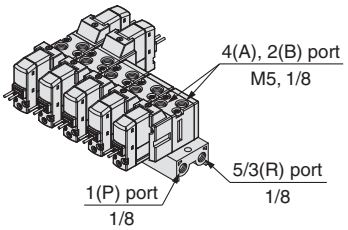	VF1□30 VF1□33	2 to 20 stations	Page 30
		Individual EXH	VV5F1-31 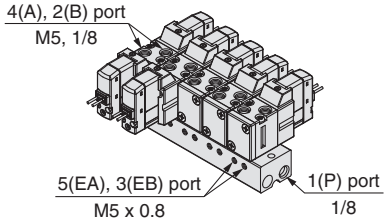			
	VF3000 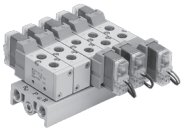	Common EXH	VV5F3-30 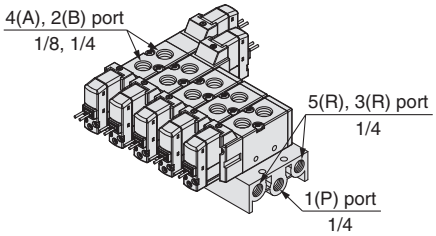	VF3□30 VF3□33	2 to 20 stations	
	VF5000 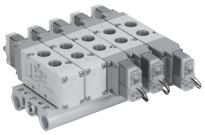	Common EXH	VV5F5-20 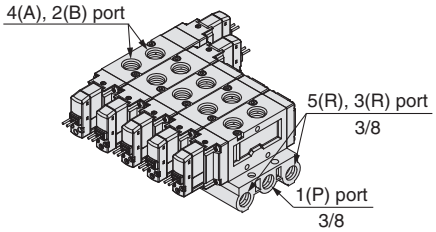	VF5□20 VF5□23	2 to 10 stations	
		Common EXH	VV5F5-21 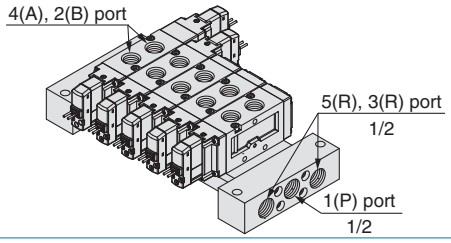		2 to 15 stations	
Base mounted	VF3000 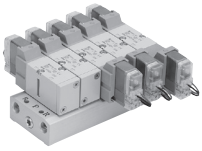	Common EXH	VV5F3-40 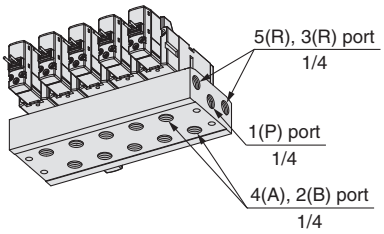	VF3□40 VF3□43	2 to 20 stations	Page 41
	VF5000 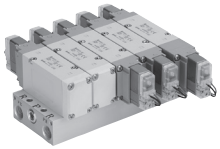	Common EXH	VV5F5-40 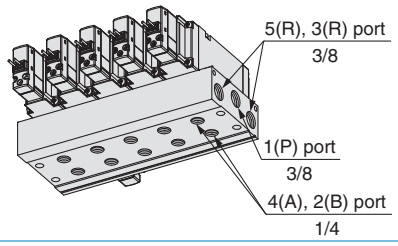	VF5□44	2 to 10 stations	

Cylinder Speed Chart 1

Use as a guide for selection.
Please check the actual conditions with SMC Model Selection Program.

Body Ported

Series	Average speed [mm/s]	Bore size														
		Series CJ2 Pressure 0.5 MPa Load factor 50 % Stroke 60 mm			Series CM2 Pressure 0.5 MPa Load factor 50 % Stroke 300 mm				Series MB, CA2 Pressure 0.5 MPa Load factor 50 % Stroke 500 mm					Series CS1 Pressure 0.5 MPa Load factor 50 % Stroke 1000 mm		
		Ø 6	Ø 10	Ø 16	Ø 20	Ø 25	Ø 32	Ø 40	Ø 40	Ø 50	Ø 63	Ø 80	Ø 100	Ø 125	Ø 140	Ø 160
VF1120-01	1000 800 600 400 200 0															
VF3130-02	1000 800 600 400 200 0															
VF5120-03	1000 800 600 400 200 0														★	★

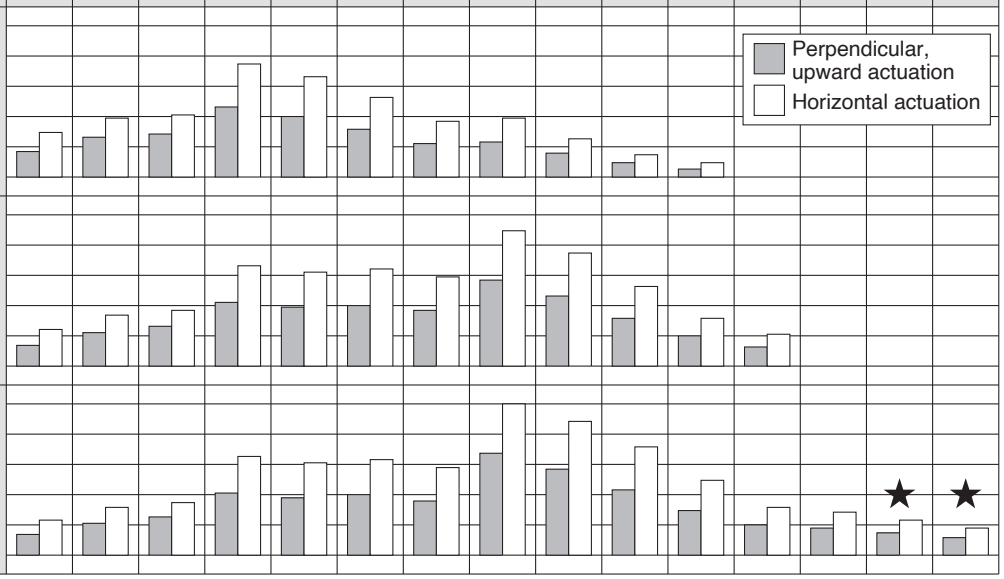

∗ With ★: when using steel piping

Base Mounted

Series	Average speed [mm/s]	Bore size																
		Series CJ2 Pressure 0.5 MPa Load factor 50 % Stroke 60 mm			Series CM2 Pressure 0.5 MPa Load factor 50 % Stroke 300 mm				Series MB, CA2 Pressure 0.5 MPa Load factor 50 % Stroke 500 mm					Series CS1 Pressure 0.5 MPa Load factor 50 % Stroke 1000 mm				
		Ø 6	Ø 10	Ø 16	Ø 20	Ø 25	Ø 32	Ø 40	Ø 40	Ø 50	Ø 63	Ø 80	Ø 100	Ø 125	Ø 140	Ø 160	Ø 180	Ø 200
VF3140-03	1000 800 600 400 200 0													★	★			
VF5144-04	1000 800 600 400 200 0														★	★	★	★

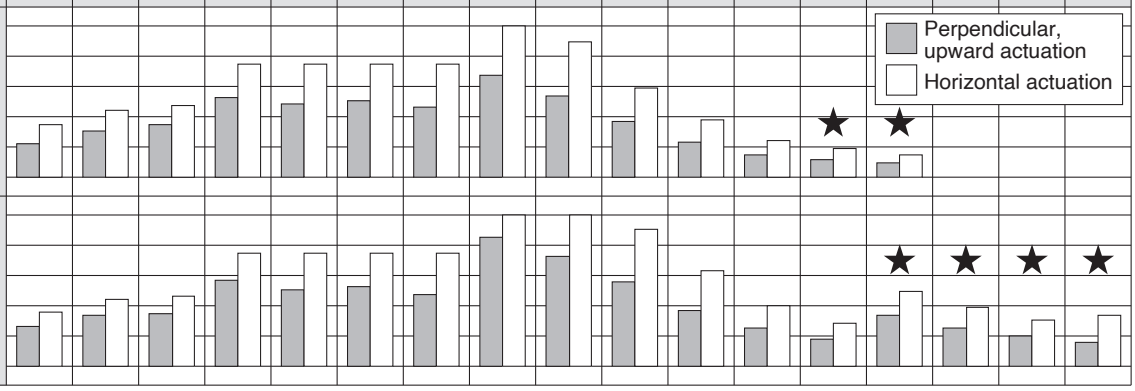

∗ With ★: when using steel piping

Cylinder Speed Chart 2

Use as a guide for selection.
Please check the actual conditions with SMC Model Selection Program.

Conditions

Body Ported

Body ported		Series CJ2	Series CM2	Series MB, CA2	Series CS1
VF1120-01	Tubing x Length	T0604 x 1 m	T0806 x 1 m		—
	Speed controller	AS3002F-06	AS3002F-08		—
	Silencer	AN101-01			—
VF3130-02	Tubing x Length	T0604 x 1 m	T1075 x 1 m		—
	Speed controller	AS3002F-06	AS4002F-10		—
	Silencer	AN110-01			—
VF5120-03	Tubing x Length	T0604 x 1 m	T1075 x 1 m	T1209 x 1 m	
	Speed controller	AS3002F-06	AS4002F-10	AS4002F-12	
	Silencer	AN30-03			AN302-03

Body Ported [when using SGP (Steel Piping)]

Body ported		Series CS1
VF5120-03	Tubing x Length	SGP10A x 1 m
	Speed controller	AS420-03
	Silencer	AN30-03

Base Mounted

Base mounted		Series CJ2	Series CM2	Series MB, CA2	Series CS1
VF3140-03	Tubing x Length	T0604 x 1 m	T1075 x 1 m	T1209 x 1 m	—
	Speed controller	AS3002F-06	AS4002F-10	AS4002F-12	—
	Silencer	AN30-03			—
VF5144-04	Tubing x Length	T0604 x 1 m	T1075 x 1 m	T1209 x 1 m	
	Speed controller	AS3002F-06	AS4002F-10	AS4002F-12	
	Silencer	AN40-04			

Base Mounted [when using SGP (Steel Piping)]

Base mounted		Series CS1
VF3140-03	Tubing x Length	SGP10A x 1 m
	Speed controller	AS420-03
	Silencer	AN30-03
VF5144-04	Tubing x Length	SGP15A x 1 m
	Speed controller	AS420-04
	Silencer	AN40-04

Pilot Operated 5 Port Solenoid Valve

VF1000/3000/5000 Series

Body Ported Single Unit

Note) Only DIN and conduit terminal types are available with AC mode.
Refer to the electrical entry for details.

∗ See the table below.

Note) Pressure specifications:
0.7 MPa, DC or 24 VAC only
Only applies to X500 for made-to-order specifications

RoHS

How to Order Valve

Body ported VF 3 1 3 0 ☐ ☐ – 5 G ☐ ☐ 1 – 01 ☐ – ☐ – ☐

Series

1	VF1000
3	VF3000
5	VF5000

Type of actuation

1	2-position single
2	2-position double
3	3-position closed center
4	3-position exhaust center
5	3-position pressure center

∗ Only 1 and 2 are available with the VF1000.

Body model

Symbol	VF1000	VF3000	VF5000
2	○	—	○
3	—	○	—

Pressure specifications

		UL-compliant
—	Standard (0.7 MPa)	●
K	High-pressure type (1 MPa)	—

Body option

0: Pilot valve individual exhaust

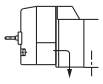

PE port∗ EA/EB port

VF1000	VF3000	VF5000
○	○	○

3: Main/Pilot valve common exhaust

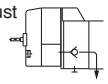

PE port EA/EB port

VF1000	VF3000	VF5000
—	○	○

∗ Refer to "Made to Order" (Page 14) when piping to PE port is required.

Coil specifications

—	Standard
T	With power saving circuit (DC only)

Note) Be sure to select the power saving circuit type when it is continuously energized for long periods of time. (Refer to page 51 for details.)

∗ T type is available with DC mode only. When T is selected, only Z type of light/surge voltage suppressor is available. (Note that when the electrical entry of DIN terminal type without connector is selected, only DOS and YOS are available.)

Rated voltage

DC		UL-compliant
5	24 VDC	●
6	12 VDC	●

AC (50/60 Hz) Note)		UL-compliant
1	100 VAC	—
2	200 VAC	—
3	110 VAC [115 VAC]	—
4	220 VAC [230 VAC]	—
7	240 VAC	—
B	24 VAC	●

Note) For triac output, refer to the made-to-order specifications (X600).

Electrical entry

Grommet	L-type plug connector	M-type plug connector	DIN terminal	DIN (EN175301-803) terminal	Conduit terminal
			[IP65 compatible]	[IP65 compatible]	[IP65 compatible]
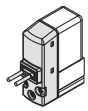 **G**: Lead wire length 300 mm **H**: Lead wire length 600 mm	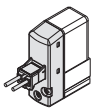 **L**: With lead wire (length 300 mm)	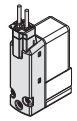 **M**: With lead wire (length 300 mm)	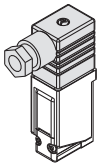 **D**: With connector	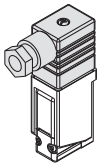 **Y**: With connector	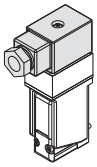 **T**: Conduit terminal
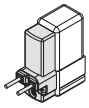 **G**: Lead wire length 300 mm **H**: Lead wire length 600 mm DC Without light/surge voltage suppressor	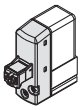 **LN**: Without lead wire	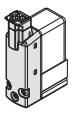 **MN**: Without lead wire			
	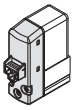 **LO**: Without connector	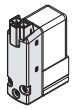 **MO**: Without connector	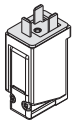 **DO**: Without connector	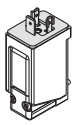 **YO**: Without connector	
CE/UKCA compliant DC	CE UKCA	CE UKCA	CE UKCA	CE UKCA	CE UKCA
CE/UKCA compliant AC Note 2)	—	—	—	CE UKCA	CE UKCA

∗ LN and MN types are with 2 sockets.
∗ Refer to page 49 when different length of lead wire for L/M-type plug connector is required.
∗ Refer to page 50 for details on the DIN (EN175301-803) terminal.
Note 1) When using IP65, select the main/pilot valve common exhaust type. (Except VF1000)
Note 2) With the same specifications as the DC type, all electrical entries for the 24 VAC type are CE/UKCA marking compliant.

Thread type

—	Rc
F	G
N	NPT
T	NPTF

∗ M5 is available with Nil only.

Bracket

—	Without bracket
F	With bracket

VF1000/3000 Single type
(The bracket cannot be connected after delivered.)

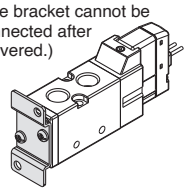

VF1000 Double type only

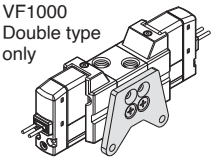

∗ Not available with the VF5000.

Made to Order

		UL-compliant
—	—	●
X500	Pilot exhaust port with piping thread (M3) specification (Refer to page 14.)	●
X600	TRIAC output specification (Refer to page 14.)	—

A, B port size

Symbol	Port size	VF1000	VF3000	VF5000
M5	M5 x 0.8	○	—	—
01	1/8	○	○	—
02	1/4	—	○	○
03	3/8	—	—	○

Manual override

—: Non-locking push type	D: Push-turn locking slotted type	E: Push-turn locking lever type
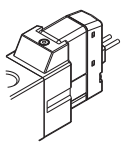	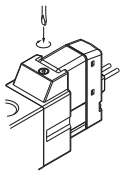	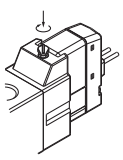

Light/Surge voltage suppressor

Symbol	Light/Surge voltage suppressor	DC	AC
—	Without light/surge voltage suppressor	○	○
S	With surge voltage suppressor	○	—Note)
Z	With light/surge voltage suppressor	○	○
R	With surge voltage suppressor (Non-polar)	○	—
U	With light/surge voltage suppressor (Non-polar)	○	—

Note) S type is not available with AC mode, since a rectifier prevents surge voltage generation.
∗ In the DIN terminal type, since a light is installed in the connector, DOZ, DOU, YOZ, YOU are not available.

⚠ Caution

When using the surge voltage suppressor type, residual voltage will remain. Refer to page 51 for details.

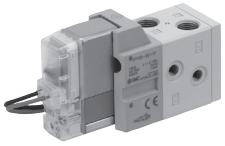

Series VF1000

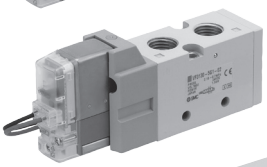

Series VF3000

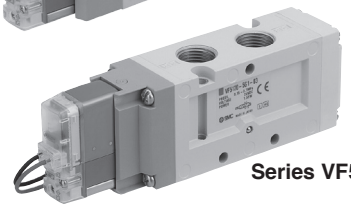

Series VF5000

Specifications

Model			VF1000	VF3000	VF5000
Fluid			Air		
Operating pressure range [MPa]	**Standard**	**2-position single/3-position**	0.15 to 0.7		
		2-position double	0.1 to 0.7		
	High-pressure type	**2-position single/3-position**	0.15 to 1.0		
		2-position double	0.1 to 1.0		
Ambient and fluid temperature [°C]			–10 to 50 (No freezing)		
Max. operating frequency [Hz]		**2-position single/double**	10	10	5
		3-position	—	3	3
Manual override			Non-locking push type Push-turn locking slotted type Push-turn locking lever type		
Pilot exhaust type			Individual exhaust, Main/Pilot valve common exhaust (Except VF1000)		
Lubrication			Not required		
Mounting orientation			Unrestricted		
Impact/Vibration resistance [m/s²] Note 1)			300/50		
Enclosure			Dustproof (IP65 Note 2) for D, Y, T)		

Note 1) Impact resistance: No malfunction occurred when it is tested in the axial direction and at the right angles to the main valve and armature in both energized and de-energized states every once for each condition. (Values at the initial period)
Vibration resistance: No malfunction occurred in a one-sweep test between 45 and 2000 Hz. Test was performed at both energized and de-energized states in the axial direction and at the right angles to the main valve and armature. (Values at the initial period)
Note 2) Based on IEC 60529. When using IP65, select the main/pilot valve common exhaust type.

Made to Order

Made to Order
(Refer to page 14 for details.)

Symbol	Specification
X500	Pilot exhaust port with piping thread (M3) specification
X600	TRIAC output specification

Solenoid Specifications

Electrical entry			Grommet (G), (H) L-type plug connector (L) M-type plug connector (M)	DIN terminal (D) DIN (EN175301-803) terminal (Y) Conduit terminal (T)
			G, H, L, M	D, Y, T
Coil rated voltage [V]	**DC**		24, 12	
	AC (50/60 Hz)		—	24, 100, 110, 200, 220, 240
Allowable voltage fluctuation			±10 % of rated voltage Note 1,2,3)	
Power consumption [W]	**DC**	**Standard**	1.5 (With light: 1.55)	1.5 (With light: 1.75)
		With power saving circuit	0.55 (With light only)	0.75 (With light only)
Apparent power [VA] Note 1,2,3)	**AC**	**24 V**	1.5 (With light: 1.55)	1.5 (With light: 1.75)
		100 V	1.55 (With light: 1.65)	1.55 (With light: 1.7)
		110 V [115 V]		
		200 V		
		220 V [230 V]		
		240 V		
Surge voltage suppressor			Diode (Non-polar type: Varistor)	
Indicator light			LED (Neon light is used for AC mode of D, Y, T.)	

Note 1) It is in common between 110 VAC and 115 VAC, and between 220 VAC and 230 VAC.
Note 2) Allowable voltage fluctuation is –15 % to +5 % of the rated voltage for 115 VAC or 230 VAC.
Note 3) Since voltage drops due to the internal circuit in S, Z, T types (with power saving circuit), the allowable voltage fluctuation should be within the following range.
24 VDC: –7 % to +10 %
12 VDC: –4 % to +10 %

Response Time

Series	Type of actuation		Pressure specifications	Operating pressure range [MPa]	Response time [ms] (at 0.5 MPa)			
					Without light/surge voltage suppressor	With light/surge voltage suppressor		AC
						S, Z type	R, U type	
VF1000	2-position	Single	Standard	0.15 to 0.7	20	45	23	45
		Double		0.1 to 0.7	12	12	12	12
		Single	High-pressure type	0.15 to 1.0	23	48	26	48
		Double		0.1 to 1.0	15	15	15	15
VF3000	2-position	Single	Standard	0.15 to 0.7	20	45	23	45
		Double		0.1 to 0.7	12	12	12	12
	3-position			0.15 to 0.7	30	55	33	55
	2-position	Single	High-pressure type	0.15 to 1.0	23	48	26	48
		Double		0.1 to 1.0	15	15	15	15
	3-position			0.15 to 1.0	33	58	36	58
VF5000	2-position	Single	Standard	0.15 to 0.7	30	55	33	55
		Double		0.1 to 0.7	15	15	15	15
	3-position			0.15 to 0.7	50	75	53	75
	2-position	Single	High-pressure type	0.15 to 1.0	33	58	36	58
		Double		0.1 to 1.0	18	18	18	18
	3-position			0.15 to 1.0	53	78	56	78

Note) Based on dynamic performance test, JIS B 8375-1981. (Coil temperature: 20 °C, at rated voltage)

Flow-rate Characteristics/Weight

Valve model	Type of actuation		Port size		Flow-rate characteristics Note 1)								Weight [g] Note 2)	
					1 → 4/2 (P → A/B)				4/2 → 5/3 (A/B → EA/EB)					
			1, 4, 2 (P, A, B)	5, 3 (EA, EB)	C [dm³/(s/bar)]	b	Cv	Q [ℓ/min] (ANR) Note 3)	C [dm³/(s/bar)]	b	Cv	Q [ℓ/min] (ANR) Note 3)	Grommet	DIN terminal
VF1□20-M5	2-position	Single	M5 x 0.8		0.49	0.40	0.13	133	0.52	0.35	0.13	137	140	176
		Double			0.49	0.40	0.13	133	0.52	0.35	0.13	137	200	272
VF1□20-01	2-position	Single	1/8	M5 x 0.8	0.76	0.22	0.17	184	0.53	0.28	0.13	133	136	172
		Double			0.76	0.22	0.17	185	0.53	0.28	0.13	133	196	268
VF3□30-01	2-position	Single	1/8		3.0	0.38	0.78	805	2.8	0.30	0.67	712	182	218
		Double			3.0	0.38	0.78	805	2.8	0.30	0.67	712	243	315
	3-position	Closed centre			2.4	0.31	0.64	614	1.8	0.37	0.46	479	260	332
		Exhaust centre			2.6	0.37	0.70	692	3.0 [2.5]	0.32 [0.28]	0.76 [0.62]	773 [628]	260	332
		Pressure centre			3.0 [1.4]	0.42 [0.44]	0.83 [0.39]	828 [392]	2.4	0.27	0.59	599	260	332
VF3□30-02	2-position	Single	1/4	1/8	4.0	0.36	1.0	1058	3.1	0.32	0.75	798	178	214
		Double			4.0	0.36	1.0	1058	3.1	0.32	0.75	798	239	311
	3-position	Closed centre			2.4	0.45	0.68	678	1.9	0.37	0.47	506	256	328
		Exhaust centre			3.0	0.42	0.82	828	3.1 [2.7]	0.36 [0.29]	0.79 [0.66]	820 [682]	256	328
		Pressure centre			5.5 [1.4]	0.37 [0.50]	1.4 [0.40]	1465 [412]	2.6	0.32	0.64	670	256	328
VF5□20-02	2-position	Single	1/4		7.1	0.46	1.9	2021	7.7	0.51	2.2	2282	313	349
		Double			7.1	0.46	1.9	2021	7.7	0.51	2.2	2282	368	440
	3-position	Closed centre			6.7	0.46	1.8	1907	6.6	0.41	1.8	1880	406	478
		Exhaust centre			7.1	0.42	1.9	1960	8.0 [7.4]	0.45 [0.47]	2.2 [2.1]	2259 [2123]	406	478
		Pressure centre			6.8 [2.7]	0.51 [0.50]	2.0 [0.78]	2016 [794]	5.7	0.37	1.4	1518	406	478
VF5□20-03	2-position	Single	3/8		8.8	0.44	2.4	2466	10.0	0.49	2.9	2915	299	335
		Double			8.8	0.44	2.4	2466	10.0	0.49	2.9	2915	354	426
	3-position	Closed centre			7.5	0.43	2.0	2086	7.5	0.38	1.9	2011	391	463
		Exhaust centre			8.3	0.40	2.2	2258	10.0 [8.7]	0.48 [0.46]	3.0 [2.4]	2892 [2476]	391	463
		Pressure centre			9.2 [3.0]	0.50 [0.49]	2.6 [0.85]	2704 [875]	6.1	0.35	1.6	1603	391	463

Note 1) [ ]: Normal position
Note 2) Values without bracket
Note 3) These valves have been calculated according to ISO6358 and indicate the flow rate under standard conditions with an inlet pressure of 0.6 MPa (relative pressure) and a pressure drop of 0.1 MPa.

Construction: Body Ported

2-position single

Symbol
2-position single

VF1000

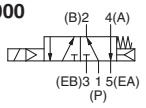

VF3000
VF5000

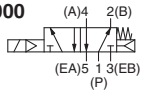

VF1000

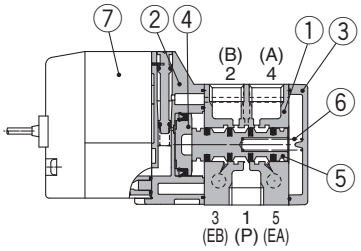

VF3000/5000

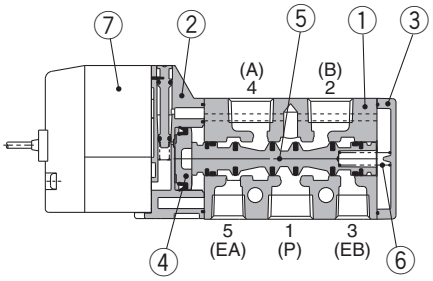

2-position double

Symbol
2-position single

VF1000

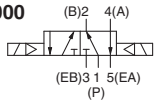

VF3000
VF5000

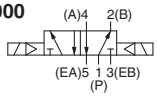

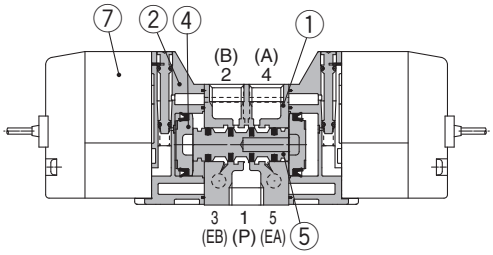

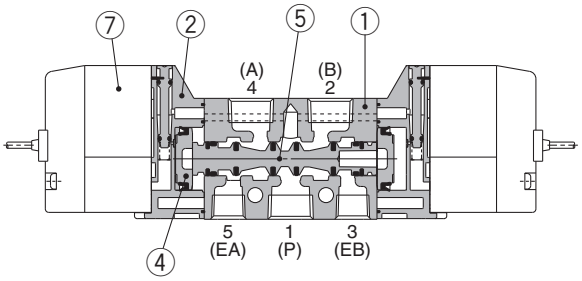

3-position closed centre/exhaust centre/pressure centre

Symbol
3-position closed centre

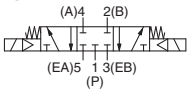

3-position exhaust centre

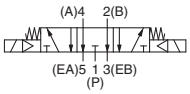

3-position pressure centre

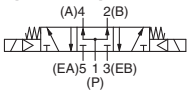

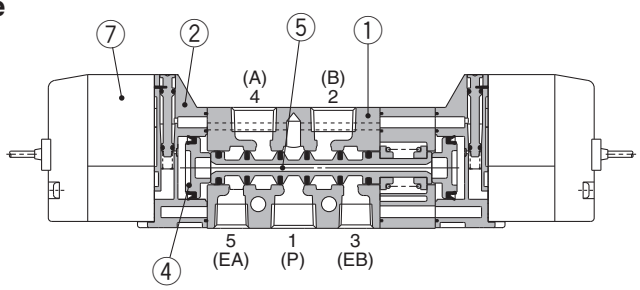

(Drawing shows a closed centre type.)

Component Parts

No.	Description	Material	Note
1	**Body**	Aluminum die-casted	White
2	**Adapter plate**	Resin	Gray
3	**End plate**	Resin (VF313□-F / VF1120-F: Aluminum die-casted)	White
4	**Piston**	Resin	
5	**Spool valve**	Aluminum, HNBR	
6	**Spring**	Stainless steel	

Replacement Parts

No.	Description	Part no.	Note
7	**Pilot valve assembly**	Refer to “How to Order Pilot Valve Assembly” on page 5.	Built-in strainer

Bracket Assembly Part No.

Description	Part no.
Bracket (for VF1000 double)	DXT144-8-1A (With 2 mounting screws)

How to Order Pilot Valve Assembly (With a gasket and two mounting screws)

⚠ Caution

When only the pilot valve assembly is replaced, it is not possible to change from V211 (Grommet or L/M-type) to V212 (DIN or Conduit type), or vice versa.

Valve model: VF□□□□□□–5GZ□1–□□□

Note) Select from below in accordance with the valve used.

■ Grommet or L/M-type

V211□□–5GZ

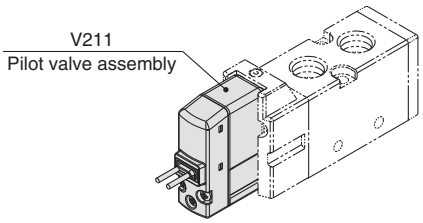

Light/Surge voltage suppressor

		DC	AC
—	Without light/surge voltage suppressor	○	○
S	With surge voltage suppressor	○	—Note)
Z	With light/surge voltage suppressor	○	○
R	With surge voltage suppressor (Non-polar)	○	—
U	With light/surge voltage suppressor (Non-polar)	○	—

Note) S type is not available with AC mode, since a rectifier prevents surge voltage generation. When T is selected, only Z type of light/surge voltage suppressor is available.

⚠ Caution

When using the surge voltage suppressor type, residual voltage will remain. Refer to page 51 for details.

Electrical entry

G	Grommet (Lead wire length 300 mm)	
H	Grommet (Lead wire length 600 mm)	
L	L-type plug connector	With lead wire
LN		Without lead wire
LO		Without connector
M	M-type plug connector	With lead wire
MN		Without lead wire
MO		Without connector

Note 1) LN and MN types are with 2 sockets.
Note 2) Refer to page 49 when different length of lead wire for L/M-type plug connector is required.

■ DIN or Conduit type

V212□□–5

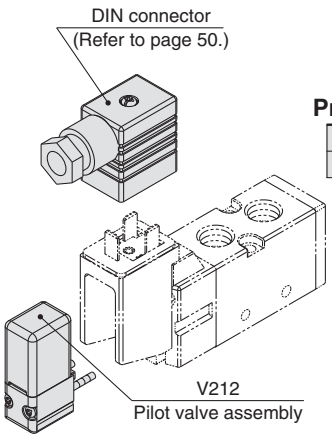

Pressure specifications

—	Standard (0.7 MPa)
K	High-pressure type (1 MPa)

Coil specifications

—	Standard
T	With power saving circuit (DC only)

Note) T type is available with DC mode only.

Rated voltage

DC

5	24 VDC
6	12 VDC

AC (50/60 Hz)

1	100 VAC
2	200 VAC
3	110 VAC [115 VAC]
4	220 VAC [230 VAC]
7	240 VAC
B	24 VAC

⚠ Caution

For V212 (DIN or Conduit type), the coil specifications and voltage (including light/surge voltage suppressor) cannot be changed by replacing the pilot valve assembly.

⚠ Caution

Tightening torque of the pilot valve assembly mounting screw
M2.5: 0.32 N·m

Dimensions: Series VF1000/Body Ported

2-position single

Grommet (G) (H): VF1120-□$^{G}_{H}$□□1-M5□(-F)

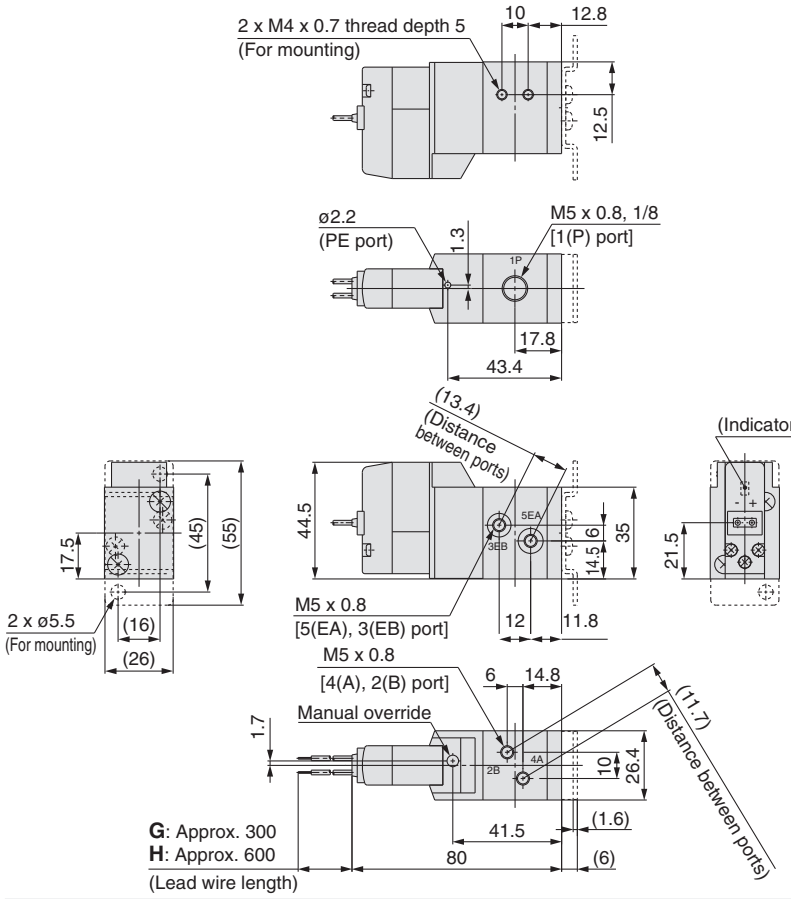

Grommet (G) (H)
DC without light/surge voltage suppressor

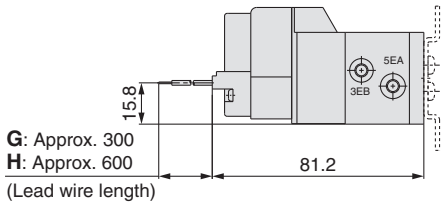

Grommet (G) (H): VF1120-□$^{G}_{H}$□□1-01□(-F)

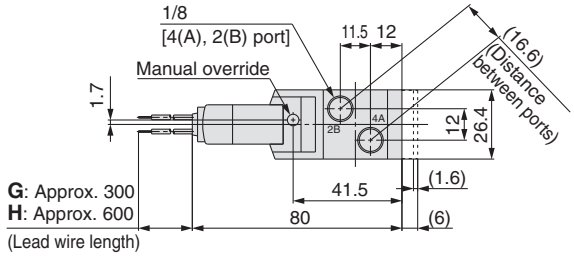

L-type plug connector (L): VF1120-□L□□1-$^{M5}_{01}$□(-F)

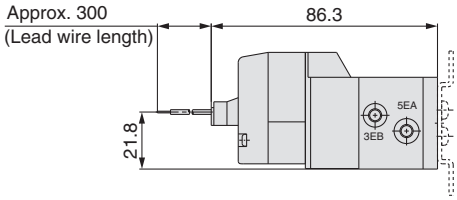

Unless otherwise indicated, dimensions are the same as Grommet (G).

DIN terminal (D) (Y): VF1120-□$^{D}_{Y}$□□1-$^{M5}_{01}$□(-F)

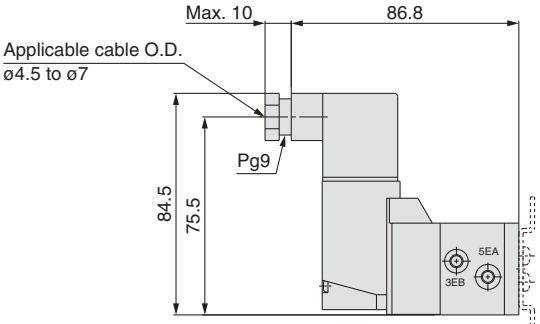

Unless otherwise indicated, dimensions are the same as Grommet (G).

M-type plug connector (M): VF1120-□M□□1-$^{M5}_{01}$□(-F)

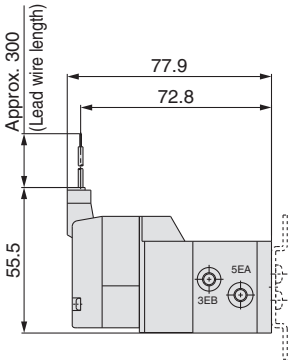

Unless otherwise indicated, dimensions are the same as Grommet (G).

Conduit terminal (T): VF1120-□T□□1-$^{M5}_{01}$□(-F)

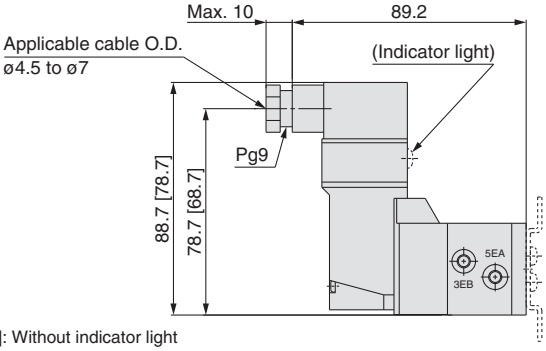

[ ]: Without indicator light
Unless otherwise indicated, dimensions are the same as Grommet (G).

Dimensions: Series VF1000/Body Ported

2-position double

Grommet (G) (H): VF1220-□$^{G}_{H}$□□1-M5□

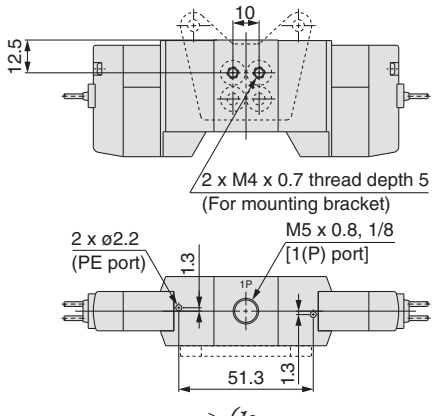

Grommet (G) (H)

DC without light/surge voltage suppressor

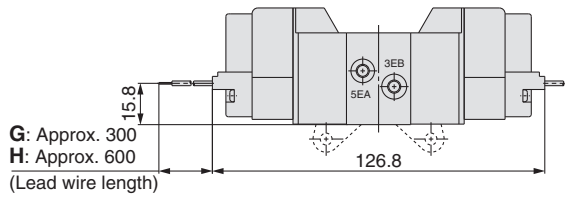

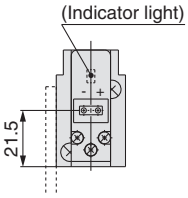

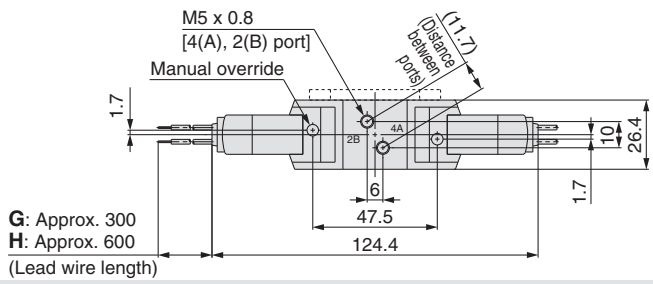

Grommet (G) (H): VF1220-□$^{G}_{H}$□□1-01□

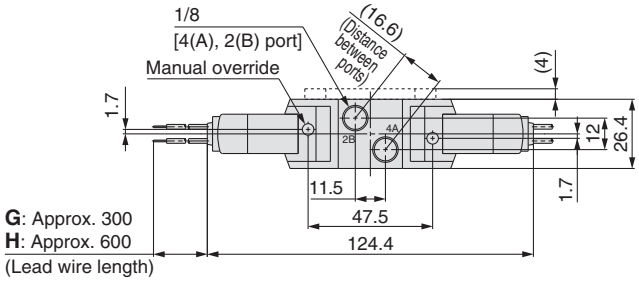

L-type plug connector (L): VF1220-□L□□1-$^{M5}_{01}$□

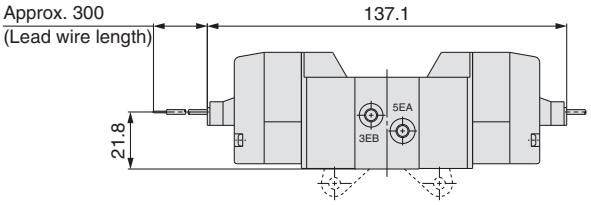

Unless otherwise indicated, dimensions are the same as Grommet (G).

DIN terminal (D) (Y): VF1220-□$^{D}_{Y}$□□1-$^{M5}_{01}$□

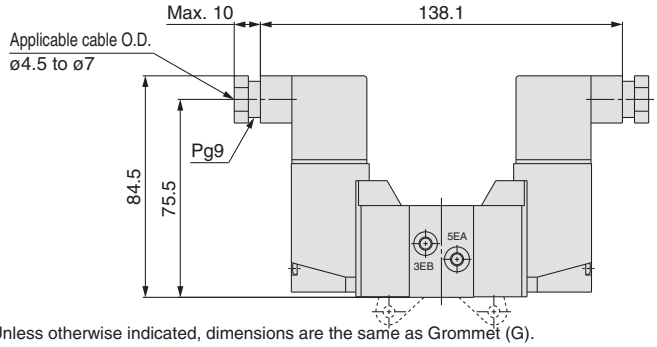

Unless otherwise indicated, dimensions are the same as Grommet (G).

M-type plug connector (M): VF1220-□M□□1-$^{M5}_{01}$□

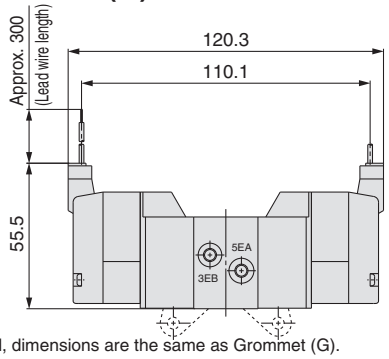

Unless otherwise indicated, dimensions are the same as Grommet (G).

Conduit terminal (T): VF1220-□T□□1-$^{M5}_{01}$□

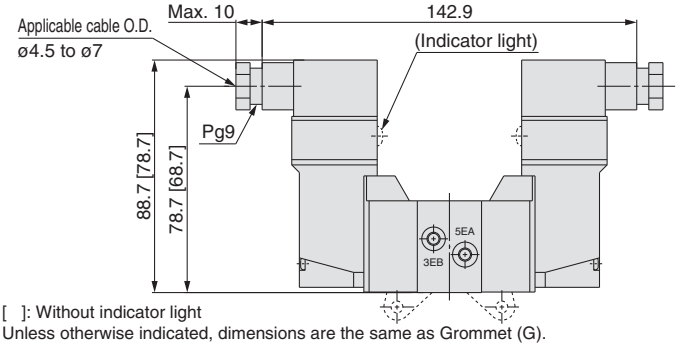

[ ]: Without indicator light

Unless otherwise indicated, dimensions are the same as Grommet (G).

Dimensions: Series VF3000/Body Ported

2-position single
Grommet (G) (H): VF3130-□$^{G}_{H}$□□1-$^{01}_{02}$□ (-F)

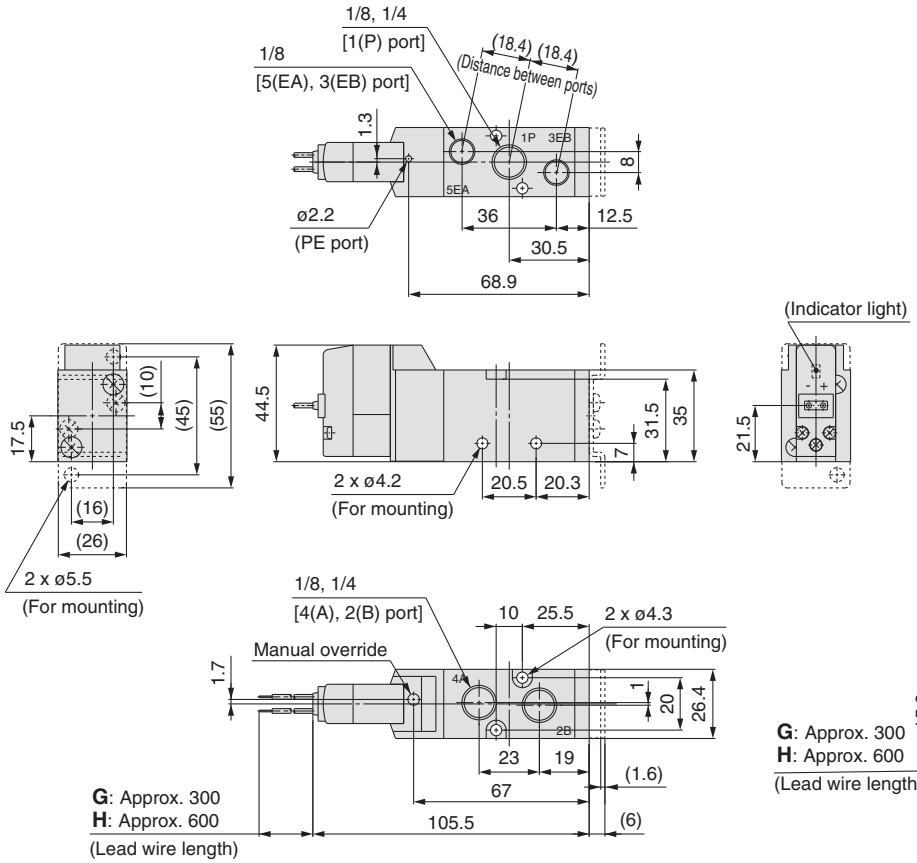

Grommet (G) (H)
DC without light/surge voltage suppressor

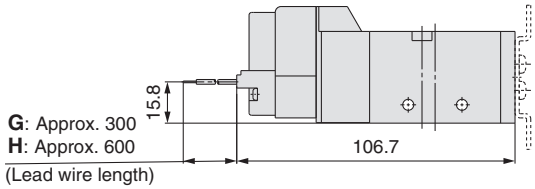

L-type plug connector (L): VF3130-□L□□1-$^{01}_{02}$□ (-F)

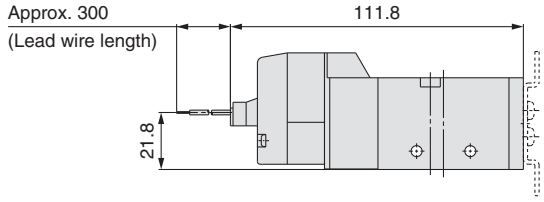

Unless otherwise indicated, dimensions are the same as Grommet (G).

DIN terminal (D) (Y): VF3130-□$^{D}_{Y}$□□1-$^{01}_{02}$□ (-F)

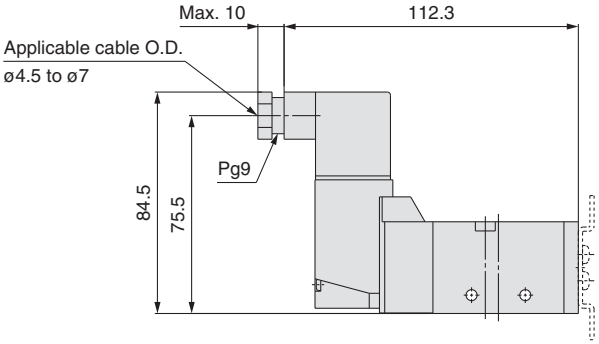

Unless otherwise indicated, dimensions are the same as Grommet (G).

M-type plug connector (M): VF3130-□M□□1-$^{01}_{02}$□ (-F)

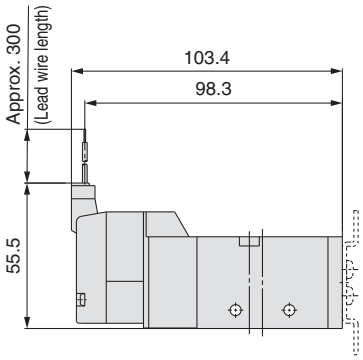

Unless otherwise indicated, dimensions are the same as Grommet (G).

Conduit terminal (T): VF3130-□T□□1-$^{01}_{02}$□ (-F)

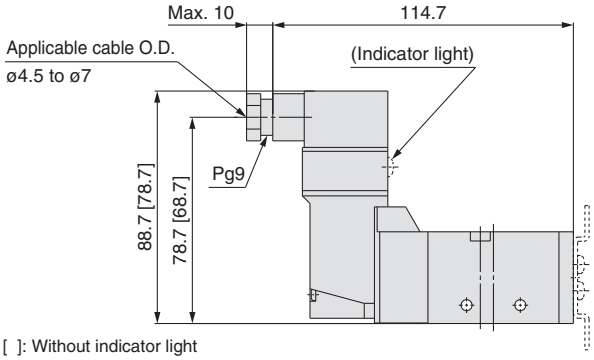

[ ]: Without indicator light
Unless otherwise indicated, dimensions are the same as Grommet (G).

Dimensions: Series VF3000/Body Ported

2-position double

Grommet (G) (H): VF3230-□$^{G}_{H}$□□1-$^{01}_{02}$□

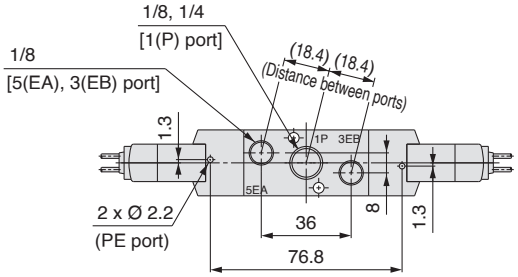

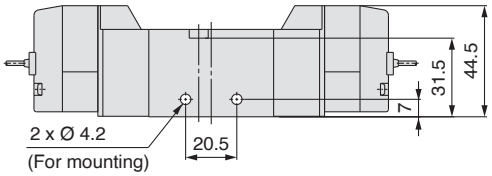

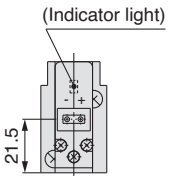

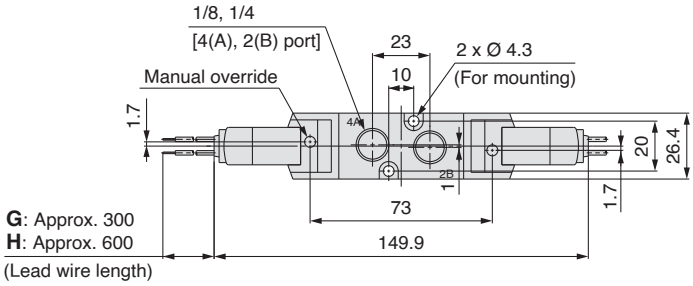

Grommet (G) (H)

DC without light/surge voltage suppressor

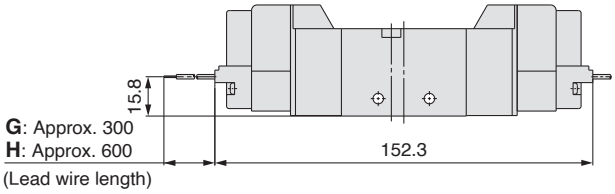

L-type plug connector (L): VF3230-□L□□1-$^{01}_{02}$□

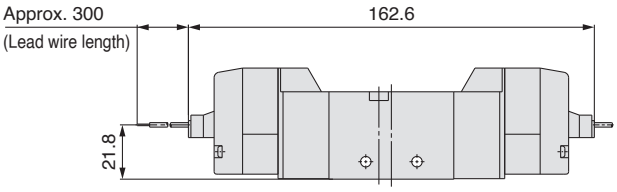

Unless otherwise indicated, dimensions are the same as Grommet (G).

DIN terminal (D) (Y): VF3230-□$^{D}_{Y}$□□1-$^{01}_{02}$□

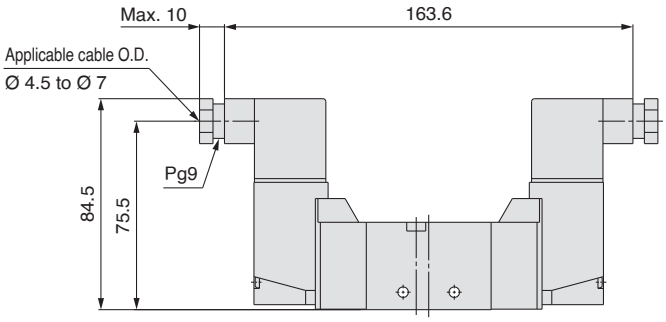

Unless otherwise indicated, dimensions are the same as Grommet (G).

M-type plug connector (M): VF3230-□M□□1-$^{01}_{02}$□

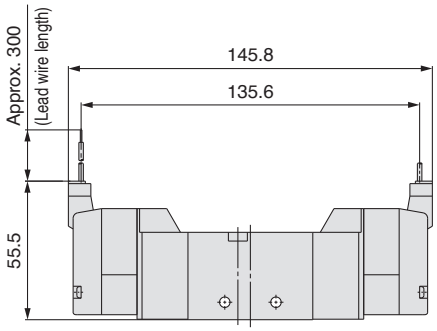

Unless otherwise indicated, dimensions are the same as Grommet (G).

Conduit terminal (T): VF3230-□T□□1-$^{01}_{02}$□

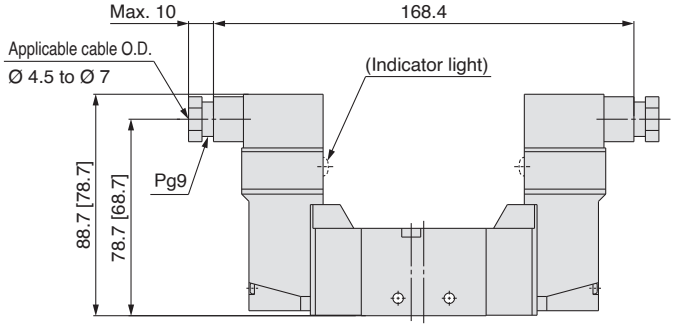

[ ]: Without indicator light
Unless otherwise indicated, dimensions are the same as Grommet (G).

Dimensions: Series VF3000/Body Ported

3-position closed centre/exhaust centre/pressure centre

Grommet (G) (H): VF3$^{3}_{4}_{5}$30-□$^{G}_{H}$□□1-$^{01}_{02}$□

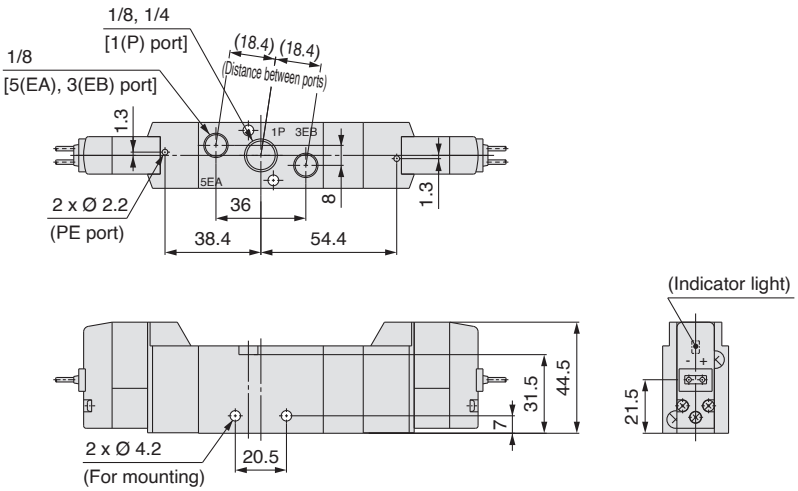

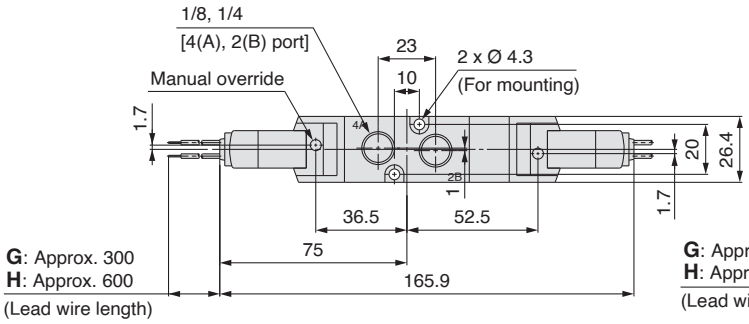

Grommet (G) (H)

DC without light/surge voltage suppressor

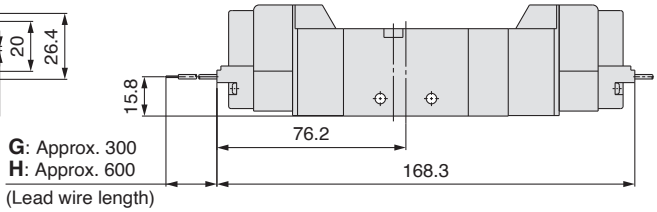

L-type plug connector (L): VF3$^{3}_{4}_{5}$30-□L□□1-$^{01}_{02}$□

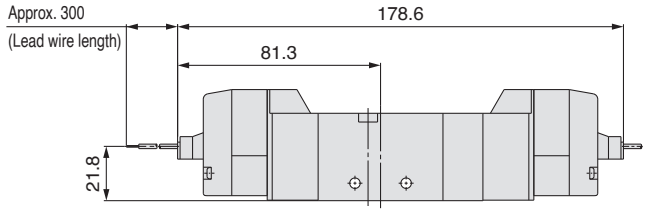

Unless otherwise indicated, dimensions are the same as Grommet (G).

DIN terminal (D) (Y): VF3$^{3}_{4}_{5}$30-□$^{D}_{Y}$□□1-$^{01}_{02}$□

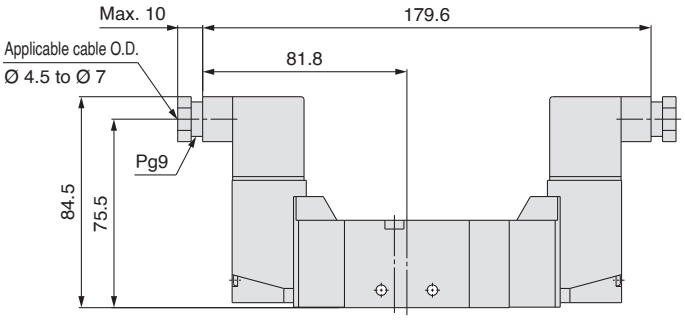

Unless otherwise indicated, dimensions are the same as Grommet (G).

M-type plug connector (M): VF3$^{3}_{4}_{5}$30-□M□□1-$^{01}_{02}$□

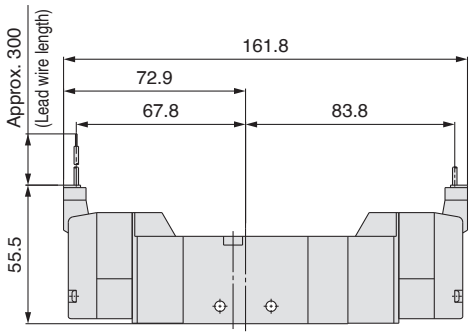

Unless otherwise indicated, dimensions are the same as Grommet (G).

Conduit terminal (T): VF3$^{3}_{4}_{5}$30-□T□□1-$^{01}_{02}$□

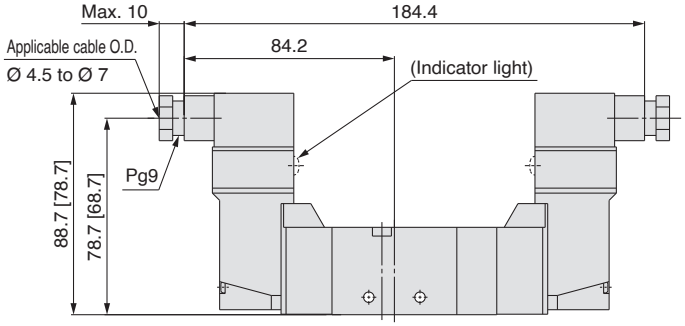

[ ]: Without indicator light
Unless otherwise indicated, dimensions are the same as Grommet (G).

Dimensions: Series VF5000/Body Ported

2-position single

Grommet (G) (H): VF5120-□$^{G}_{H}$□□1-$^{02}_{03}$□

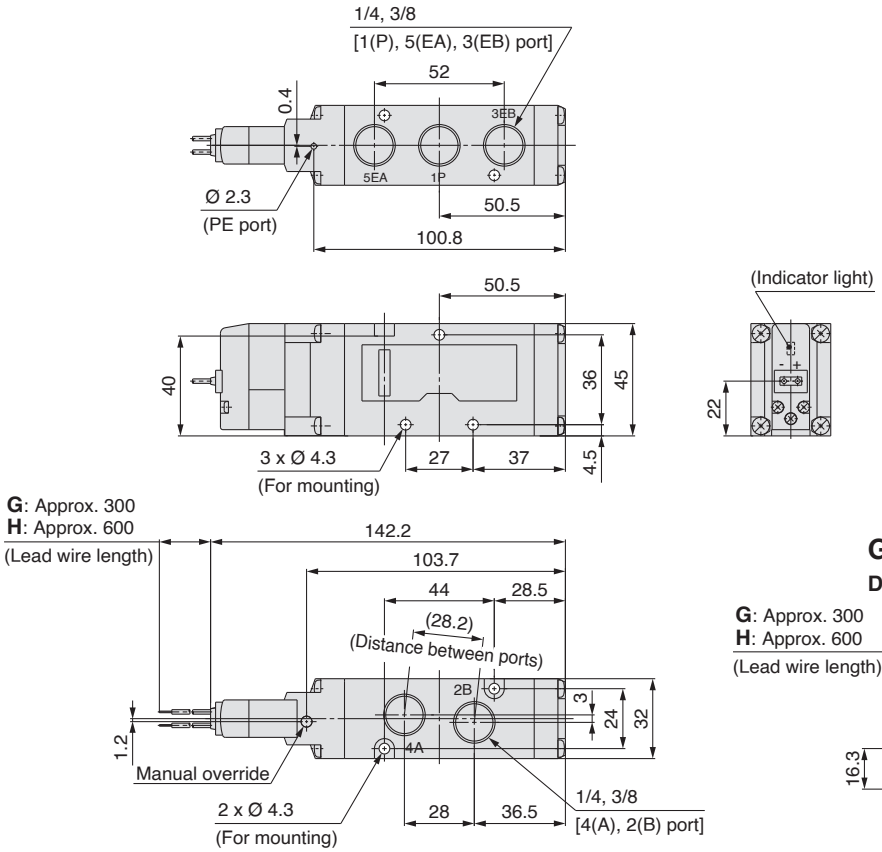

Grommet (G) (H)

DC without light/surge voltage suppressor

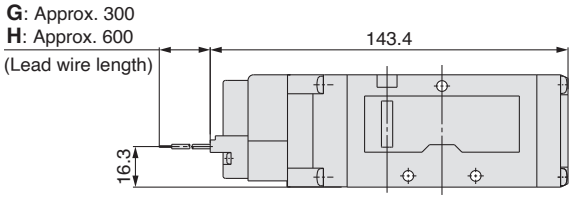

L-type plug connector (L): VF5120-□L□□1-$^{02}_{03}$□

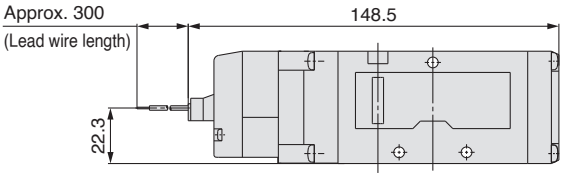

Unless otherwise indicated, dimensions are the same as Grommet (G).

DIN terminal (D) (Y): VF5120-□$^{D}_{Y}$□□1-$^{02}_{03}$□

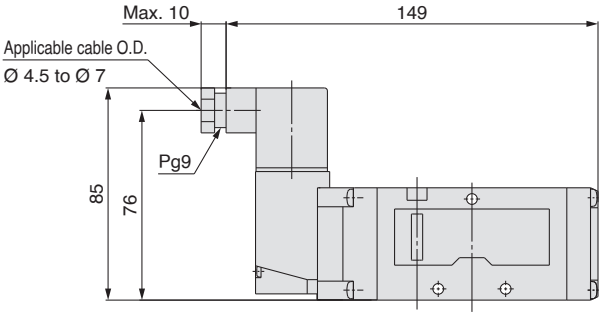

Unless otherwise indicated, dimensions are the same as Grommet (G).

M-type plug connector (M): VF5120-□M□□1-$^{02}_{03}$□

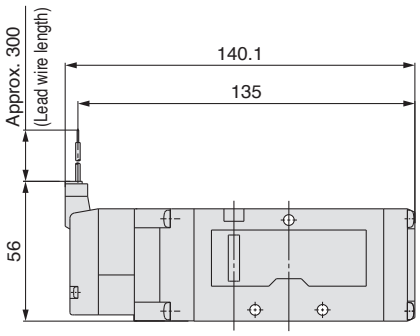

Unless otherwise indicated, dimensions are the same as Grommet (G).

Conduit terminal (T): VF5120-□T□□1-$^{02}_{03}$□

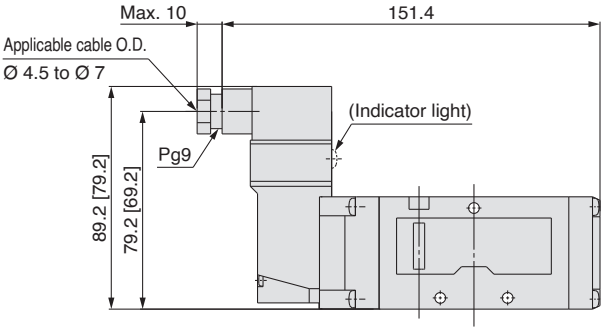

[ ]: Without indicator light
Unless otherwise indicated, dimensions are the same as Grommet (G).

Dimensions: Series VF5000/Body Ported

2-position double

Grommet (G) (H): VF5220-□$^{G}_{H}$□□1-$^{02}_{03}$□

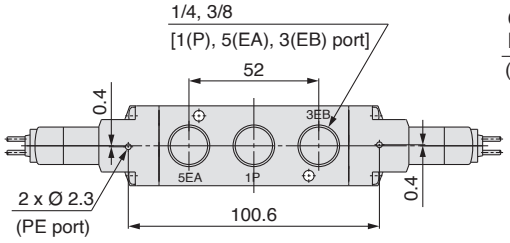

Grommet (G) (H)

DC without light/surge voltage suppressor

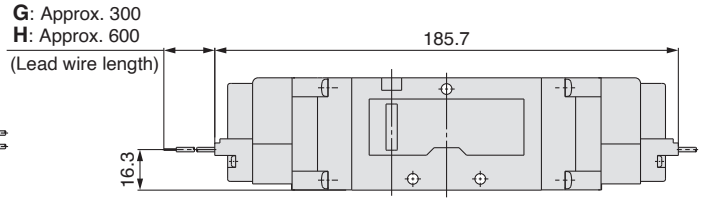

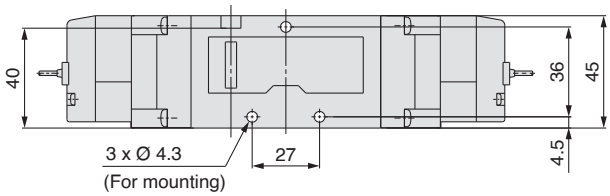

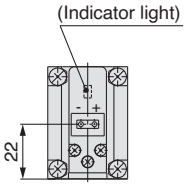

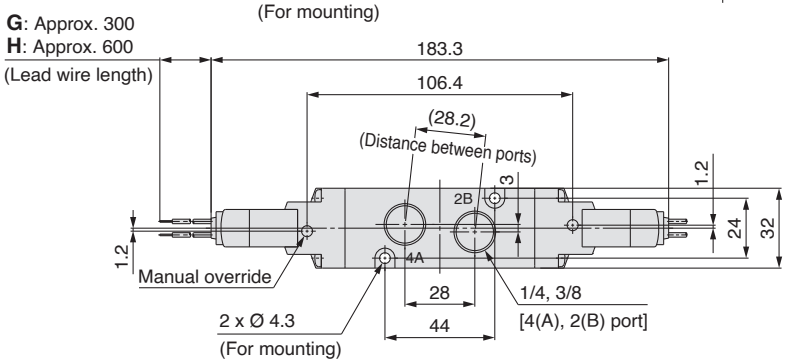

L-type plug connector (L): VF5220-□L□□1-$^{02}_{03}$□

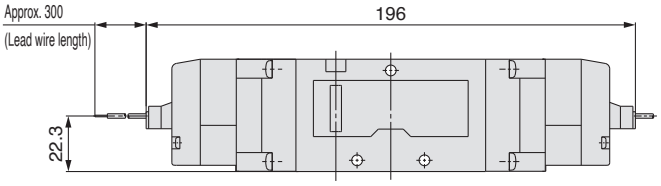

Unless otherwise indicated, dimensions are the same as Grommet (G).

DIN terminal (D) (Y): VF5220-□$^{D}_{Y}$□□1-$^{02}_{03}$□

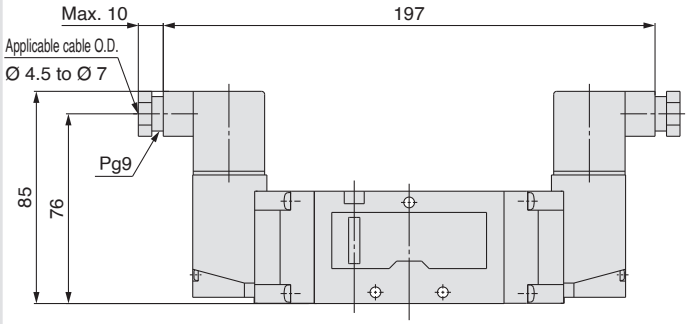

Unless otherwise indicated, dimensions are the same as Grommet (G).

M-type plug connector (M): VF5220-□M□□1-$^{02}_{03}$□

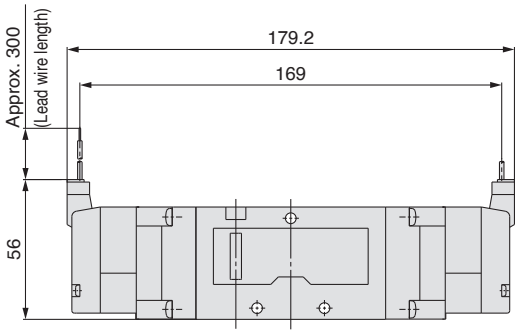

Unless otherwise indicated, dimensions are the same as Grommet (G).

Conduit terminal (T): VF5220-□T□□1-$^{02}_{03}$□

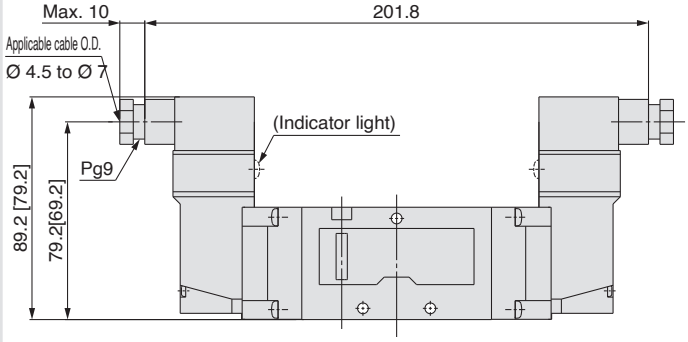

[ ]: Without indicator light
Unless otherwise indicated, dimensions are the same as Grommet (G).

Dimensions: Series VF5000/Body Ported

3-position closed centre/exhaust centre/pressure centre

Grommet (G) (H): VF5$^{3}_{4}_{5}$20-□$^{G}_{H}$□□1-$^{02}_{03}$□

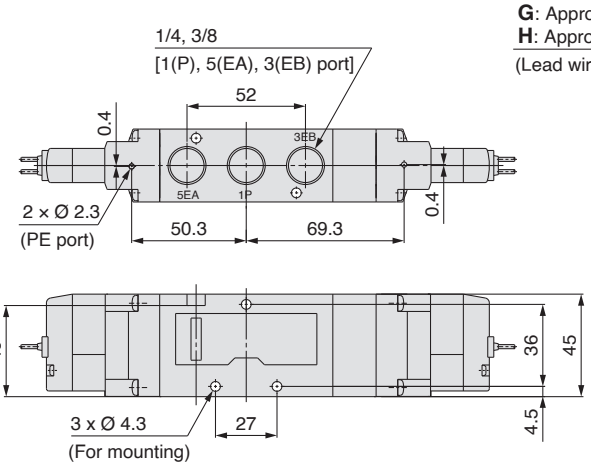

Grommet (G) (H)

DC without light/surge voltage suppressor

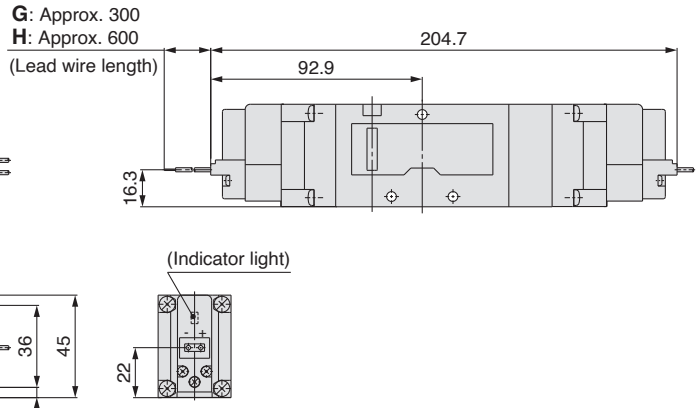

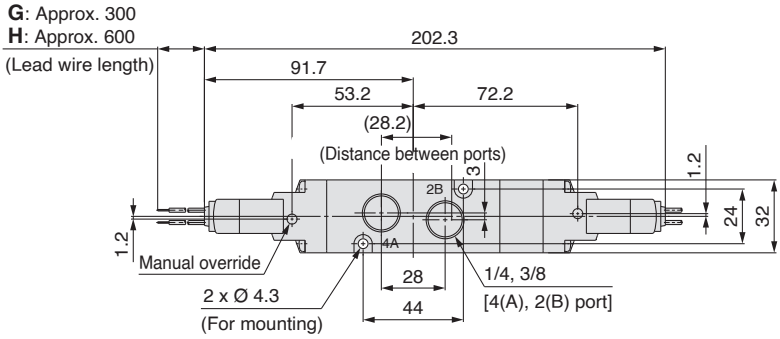

L-type plug connector (L): VF5$^{3}_{4}_{5}$20-□L□□1-$^{02}_{03}$

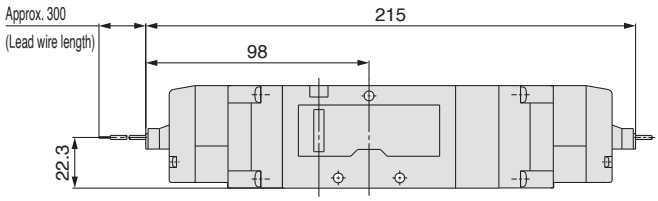

Unless otherwise indicated, dimensions are the same as Grommet (G).

DIN terminal (D) (Y): VF5$^{3}_{4}_{5}$20-□$^{D}_{Y}$□□1-$^{02}_{03}$□

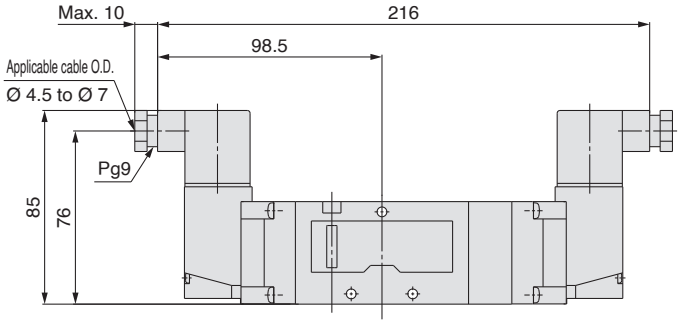

Unless otherwise indicated, dimensions are the same as Grommet (G).

M-type plug connector (M): VF5$^{3}_{4}_{5}$20-□M□□1-$^{02}_{03}$□

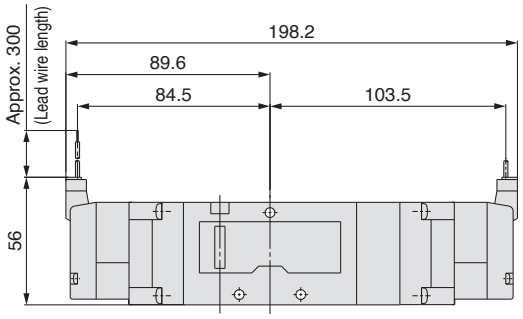

Unless otherwise indicated, dimensions are the same as Grommet (G).

Conduit terminal (T): VF5$^{3}_{4}_{5}$20-□T□□1-$^{02}_{03}$□

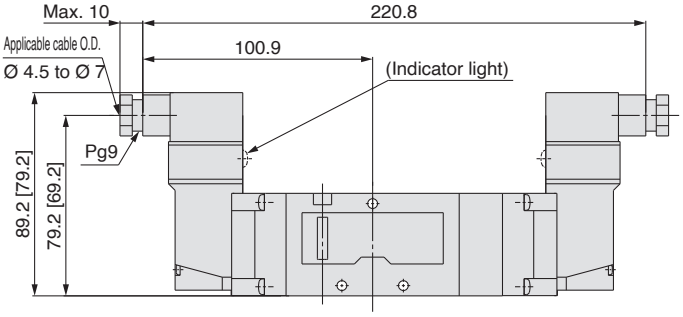

[ ]: Without indicator light
Unless otherwise indicated, dimensions are the same as Grommet (G).

Made to Order

Please contact SMC for detailed dimensions, specifications, and lead times.

1 Body Ported Pilot Exhaust Port with Piping Thread (M3) Specification

In this specification, piping to the pilot exhaust port (PE port) is available when the valve is used in an environment where the exhaust from the pilot valve is not allowable, or intrusion of ambient dust should be prevented.
Combination with low wattage specification is not possible.

Note) For applicable models, refer to page 1.

How to Order Valve

VF 3 □ 3 0 □□ – □□□□ 1 – □□□ – □ – X500

Series

1	VF1000
3	VF3000
5	VF5000

Type of actuation

1	2-position single
2	2-position double
3	3-position closed centre
4	3-position exhaust centre
5	3-position pressure centre

Body model

Symbol	VF1000	VF3000	VF5000
2	□	—	□
3	—	□	—

Note) Not available for the base mounted type.

Entry is the same as standard products. The specifications and performance are the same as those of standard products.

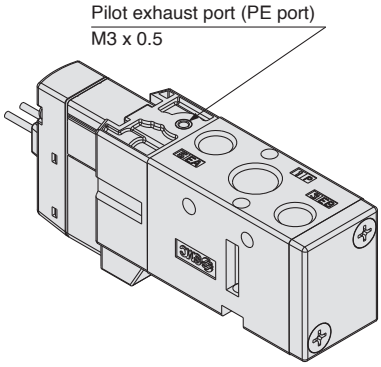

• **2-position single**

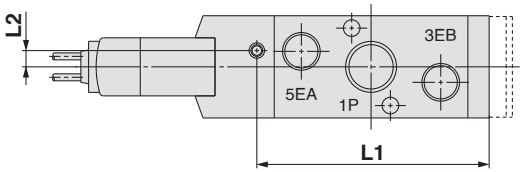

• **2-position double**

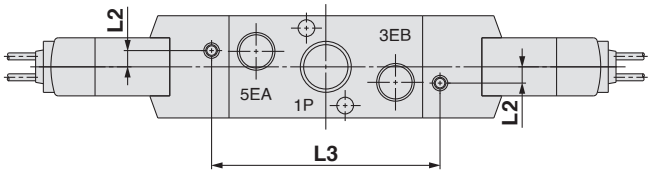

• **3-position closed centre/exhaust centre/pressure centre**

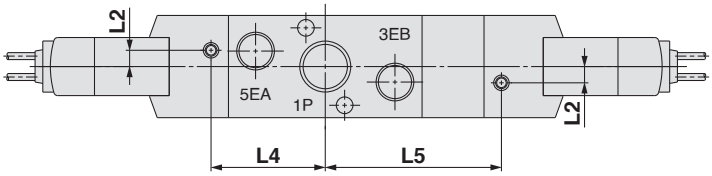

Series	L1	L2	L3	L4	L5
VF1000	34.5	4.2	33.4	—	—
VF3000	60	4.2	59	29.5	45.5
VF5000	95	3.45	89	44.5	63.5

2 TRIAC Output Specification

For AC type valve, use this specification when the pilot valve is not recovered even though valve power supply is turned OFF at the equipment using output unit with large leakage voltage over 8 % of the rated voltage (TRIAC output such as PLC or SSR, etc.).
Combination with low wattage specification is not possible. In addition, the -X600 is not compliant with UL standards.

How to Order Valve

VF 3 □ □□□□ – □□□□ 1 – □□ – □ – □ – X600

Series

1	VF1000
3	VF3000
5	VF5000

Entry is the same as standard products.
Note) Rated voltage: AC type only

Type of actuation

1	2-position single
2	2-position double
3	3-position closed centre
4	3-position exhaust centre
5	3-position pressure centre

Pilot Operated 5 Port Solenoid Valve

VF3000/5000 Series

Base Mounted

Single Unit

Note) Only DIN and conduit terminal types are available with AC mode.
Refer to the electrical entry for details.

∗ See the table below.

Note) Pressure specifications:
0.7 MPa, DC or 24 VAC only
In addition, made-to-order specifications are not compliant with UL standards.

RoHS

How to Order Valve

Base mounted (VF1000: Not available)

VF 3 1 4 0 K T – 5 G Z D 1 – 02 ☐ – ☐

Series

3	VF3000
5	VF5000

∗ Not available with the VF1000.

Type of actuation

1	2-position single
2	2-position double
3	3-position closed center
4	3-position exhaust center
5	3-position pressure center

Body model

Body option

0: Pilot valve individual exhaust

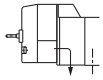

PE port EA/EB port

VF3000	VF5000
○	—

3: Main/Pilot valve common exhaust

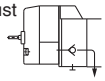

PE port EA/EB port

VF3000	VF5000
○	—

4: Pilot valve base exhaust

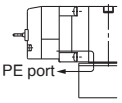

PE port

VF3000	VF5000
—	○

Pressure specifications

		UL-compliant
—	Standard (0.7 MPa)	
K	High-pressure type (1 MPa)	—

Coil specifications

—	Standard
T	With power saving circuit (DC only)

Note) Be sure to select the power saving circuit type when it is continuously energized for long periods of time. (Refer to page 51 for details.)

∗ T type is available with DC mode only. When T is selected, only Z type of light/surge voltage suppressor is available. (Note that when the electrical entry of DIN terminal type without connector is selected, only DOS and YOS are available.)

Rated voltage

DC		UL-compliant
5	24 VDC	
6	12 VDC	

AC (50/60 Hz) Note)		UL-compliant
1	100 VAC	—
2	200 VAC	—
3	110 VAC [115 VAC]	—
4	220 VAC [230 VAC]	—
7	240 VAC	—
B	24 VAC	

Note) For triac output, refer to the made-to-order specifications (X600).

Made to Order

		UL-compliant
—	—	
X600	TRIAC output specification (Refer to page 14.)	—

Thread type

—	Rc
F	G
N	NPT
T	NPTF

Port size (Sub-plate)

Symbol	Port size	VF3000	VF5000
—	Without sub-plate		
02	1/4	○	○
03	3/8	○	○
04	1/2	—	○

∗ Without the sub-plate, two mounting screws and a gasket are included.

Manual override

—: Non-locking push type	D: Push-turn locking slotted type	E: Push-turn locking lever type
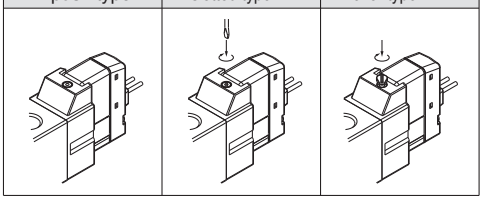		

Light/Surge voltage suppressor

Symbol	Light/Surge voltage suppressor	DC	AC
—	Without light/surge voltage suppressor	○	○
S	With surge voltage suppressor	○	— Note)
Z	With light/surge voltage suppressor	○	○
R	With surge voltage suppressor (Non-polar)	○	—
U	With light/surge voltage suppressor (Non-polar)	○	—

Note) S type is not available with AC mode, since a rectifier prevents surge voltage generation.

∗ In the DIN terminal type, since a light is installed in the connector, DOZ, DOU, YOZ, YOU are not available.

Electrical entry

Grommet	L-type plug connector	M-type plug connector	DIN terminal	DIN (EN175301-803) terminal	Conduit terminal
			[IP65 compatible]	[IP65 compatible]	[IP65 compatible]
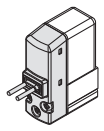 **G**: Lead wire length 300 mm **H**: Lead wire length 600 mm	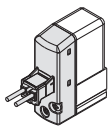 **L**: With lead wire (length 300 mm)	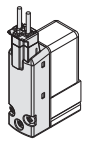 **M**: With lead wire (length 300 mm)	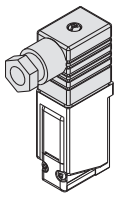 **D**: With connector	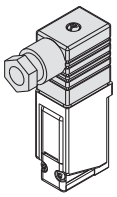 **Y**: With connector	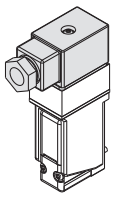 **T**: Conduit terminal
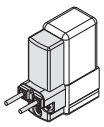 **G**: Lead wire length 300 mm **H**: Lead wire length 600 mm DC Without light/surge voltage suppressor	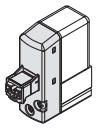 **LN**: Without lead wire	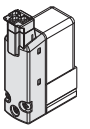 **MN**: Without lead wire			
	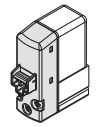 **LO**: Without connector	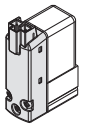 **MO**: Without connector	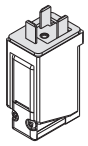 **DO**: Without connector	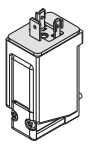 **YO**: Without connector	
CE/UKCA compliant DC	CE UKCA	CE UKCA	CE UKCA	CE UKCA	CE UKCA
CE/UKCA compliant AC Note 2)	—	—	—	CE UKCA	CE UKCA

∗ LN and MN types are with 2 sockets.
∗ Refer to page 49 when different length of lead wire for L/M-type plug connector is required.
∗ Refer to page 50 for details on the DIN (EN175301-803) terminal.
Note 1) When using IP65, select the main/pilot valve common exhaust type or pilot valve base exhaust type.
Note 2) With the same specifications as the DC type, all electrical entries for the 24 VAC type are CE/UKCA marking compliant.

⚠ Caution

When using the surge voltage suppressor type, residual voltage will remain. Refer to page 51 for details.

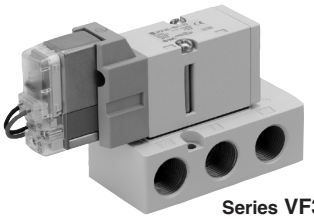

Series VF3000

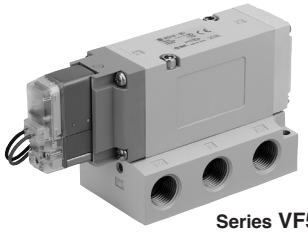

Series VF5000

Specifications

Model			VF3000	VF5000
Fluid			Air	
Operating pressure range [MPa]	**Standard**	**2-position single/3-position**	0.15 to 0.7	
		2-position double	0.1 to 0.7	
	High-pressure type	**2-position single/3-position**	0.15 to 1.0	
		2-position double	0.1 to 1.0	
Ambient and fluid temperature [°C]			–10 to 50 (No freezing)	
Max. operating frequency [Hz]		**2-position single/double**	10	5
		3-position	3	3
Manual override			Non-locking push type Push-turn locking slotted type Push-turn locking lever type	
Pilot exhaust type			Individual exhaust, Main/ Pilot valve common exhaust	Pilot valve base exhaust
Lubrication			Not required	
Mounting orientation			Unrestricted	
Impact/Vibration resistance [m/s²] Note 1)			300/50	
Enclosure			Dustproof (IP65 Note 2) for D, Y, T)	

Note 1) Impact resistance: No malfunction occurred when it is tested in the axial direction and at the right angles to the main valve and armature in both energized and de-energized states every once for each condition. (Values at the initial period)
Vibration resistance: No malfunction occurred in a one-sweep test between 45 and 2000 Hz. Test was performed at both energized and de-energized states in the axial direction and at the right angles to the main valve and armature. (Values at the initial period)
Note 2) Based on IEC 60529. When using IP65, select the main/pilot valve common exhaust type.

Made to Order

Made to Order
(Refer to page 14 for details.)

Symbol	Specification
X600	TRIAC output specification

Solenoid Specifications

Electrical entry			Grommet (G), (H) L-type plug connector (L) M-type plug connector (M)	DIN terminal (D) DIN (EN175301-803) terminal (Y) Conduit terminal (T)
			G, H, L, M	D, Y, T
Coil rated voltage [V]	**DC**		24, 12	
	AC (50/60 Hz)		—	24, 100, 110, 200, 220, 240
Allowable voltage fluctuation			±10 % of rated voltage*	
Power consumption [W]	**DC**	**Standard**	1.5 (With light: 1.55)	1.5 (With light: 1.75)
		With power saving circuit	0.55 (With light only)	0.75 (With light only)
Apparent power [VA]*	**AC**	**24 V**	1.5 (With light: 1.55)	1.5 (With light: 1.75)
		100 V	1.55 (With light: 1.65)	1.55 (With light: 1.7)
		110 V [115 V]		
		200 V		
		220 V [230 V]		
		240 V		
Surge voltage suppressor			Diode (Non-polar type: Varistor)	
Indicator light			LED (Neon light is used for AC mode of D, Y, T.)	

Note 1) It is in common between 110 VAC and 115 VAC, and between 220 VAC and 230 VAC.
Note 2) Allowable voltage fluctuation is –15 % to +5 % of the rated voltage for 115 VAC or 230 VAC.
Note 3) Since voltage drops due to the internal circuit in S, Z, T types (with power saving circuit), the allowable voltage fluctuation should be within the following range.
24 VDC: –7 % to +10 %
12 VDC: –4 % to +10 %

Response Time

Series	Type of actuation		Pressure specifications	Operating pressure range [MPa]	Response time [ms] (at 0.5 MPa)			
					Without light/surge voltage suppressor	With light/surge voltage suppressor		AC
						S, Z type	R, U type	
VF1000	2-position	Single	Standard	0.15 to 0.7	20	45	23	45
		Double		0.1 to 0.7	12	12	12	12
		Single	High-pressure type	0.15 to 1.0	23	48	26	48
		Double		0.1 to 1.0	15	15	15	15
VF3000	2-position	Single	Standard	0.15 to 0.7	20	45	23	45
		Double		0.1 to 0.7	12	12	12	12
	3-position			0.15 to 0.7	30	55	33	55
	2-position	Single	High-pressure type	0.15 to 1.0	23	48	26	48
		Double		0.1 to 1.0	15	15	15	15
	3-position			0.15 to 1.0	33	58	36	58
VF5000	2-position	Single	Standard	0.15 to 0.7	30	55	33	55
		Double		0.1 to 0.7	15	15	15	15
	3-position			0.15 to 0.7	50	75	53	75
	2-position	Single	High-pressure type	0.15 to 1.0	33	58	36	58
		Double		0.1 to 1.0	18	18	18	18
	3-position			0.15 to 1.0	53	78	56	78

Note) Based on dynamic performance test, JIS B 8375-1981. (Coil temperature: 20 °C, at rated voltage)

Flow-rate Characteristics/Weight

Valve model	Type of actuation		Port size	Flow-rate characteristics Note 1)								Weight [g] Note 2)	
				1 → 4/2 (P → A/B)				4/2 → 5/3 (A/B → EA/EB)					
				C [dm³/(s/bar)]	b	Cv	Q [ℓ/min] (ANR) Note 3)	C [dm³/(s/bar)]	b	Cv	Q [ℓ/min] (ANR) Note 3)	Grommet	DIN terminal
VF3□40-02	2-position	Single	1/4	2.8	0.14	0.64	649	2.5	0.18	0.57	592	344 (192)	380 (228)
		Double		2.8	0.14	0.64	649	2.5	0.18	0.57	592	405 (252)	477 (324)
	3-position	Closed centre		2.1	0.22	0.49	509	1.6	0.26	0.41	397	422 (270)	494 (342)
		Exhaust centre		2.3	0.21	0.53	554	2.8 [2.1]	0.23 [0.26]	0.66 [0.50]	682 [521]	422 (270)	494 (342)
		Pressure centre		2.9 [1.1]	0.16 [0.45]	0.67 [0.32]	679 [311]	2.1	0.23	0.49	512	422 (270)	494 (342)
VF3□40-03	2-position	Single	3/8	3.1	0.24	0.76	760	2.6	0.23	0.62	634	327 (192)	363 (228)
		Double		3.1	0.24	0.76	760	2.6	0.23	0.62	634	388 (252)	460 (324)
	3-position	Closed centre		2.2	0.33	0.57	570	1.6	0.34	0.40	418	405 (270)	477 (342)
		Exhaust centre		2.6	0.27	0.61	649	2.8 [2.3]	0.30 [0.28]	0.68 [0.55]	712 [578]	405 (270)	477 (342)
		Pressure centre		3.4 [1.3]	0.29 [0.48]	0.80 [0.38]	859 [376]	2.2	0.31	0.52	563	405 (270)	477 (342)
VF5□44-02	2-position	Single	1/4	7.3	0.49	2.1	2128	7.3	0.50	2.0	2146	486 (297)	522 (333)
		Double		7.3	0.49	2.1	2128	7.3	0.50	2.0	2146	541 (352)	613 (424)
	3-position	Closed centre		6.6	0.35	1.7	1734	6.3	0.31	1.6	1612	578 (390)	650 (462)
		Exhaust centre		7.4	0.33	1.9	1918	8.1 [7.4]	0.35 [0.34]	2.1 [1.9]	2128 [1931]	578 (390)	650 (462)
		Pressure centre		8.0 [2.9]	0.35 [0.48]	2.1 [0.85]	2102 [839]	5.6	0.31	1.5	1433	578 (390)	650 (462)
VF5□44-03	2-position	Single	3/8	8.4	0.34	2.2	2192	8.9	0.29	2.3	2249	473 (297)	509 (333)
		Double		8.4	0.34	2.2	2192	8.9	0.29	2.3	2249	529 (352)	601 (424)
	3-position	Closed centre		7.3	0.34	2.0	1905	7.1	0.28	1.8	1783	566 (390)	638 (462)
		Exhaust centre		8.1	0.27	2.0	2022	14.0 [8.3]	0.26 [0.31]	3.4 [2.2]	3473 [2124]	566 (390)	638 (462)
		Pressure centre		8.1 [2.5]	0.33 [0.48]	2.0 [0.74]	2100 [723]	5.7	0.31	1.4	1459	566 (390)	638 (462)
VF5□44-04	2-position	Single	1/2	9.4	0.43	2.7	2614	12.0	0.32	3.0	3091	545 (297)	581 (333)
		Double		9.4	0.43	2.7	2614	12.0	0.32	3.0	3091	600 (352)	672 (424)
	3-position	Closed centre		7.1	0.41	2.1	1945	7.4	0.32	2.0	1906	638 (390)	710 (462)
		Exhaust centre		8.6	0.39	2.4	2323	13.0 [8.9]	0.21 [0.40]	3.1 [2.5]	3132 [2421]	638 (390)	710 (462)
		Pressure centre		11.0 [2.6]	0.18 [0.47]	2.6 [0.78]	2606 [746]	6.1	0.35	1.6	1603	638 (390)	710 (462)

Note 1) [ ]: Normal position
Note 2) Values without bracket
Note 3) These valves have been calculated according to ISO6358 and indicate the flow rate under standard conditions with an inlet pressure of 0.6 MPa (relative pressure) and a pressure drop of 0.1 MPa.

Construction: Base Mounted

VF3000/5000

Symbol
2-position single

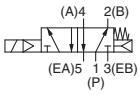

2-position single

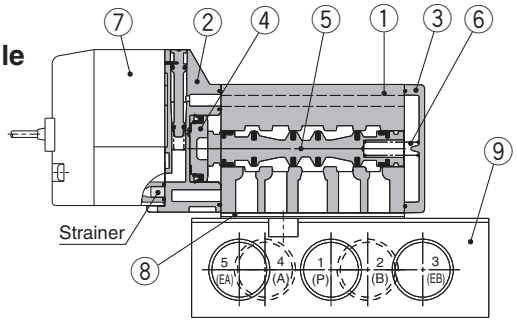

Symbol
2-position double

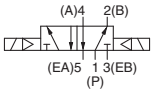

2-position double

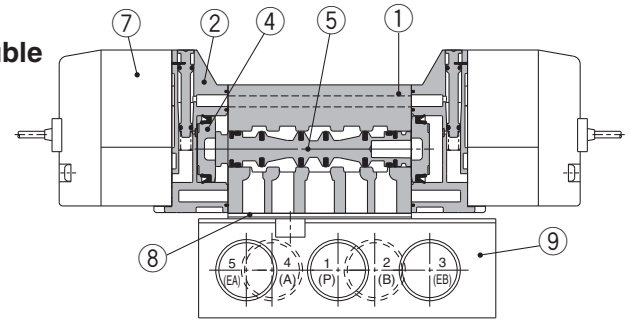

Symbol
3-position closed centre

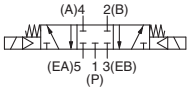

3-position exhaust centre

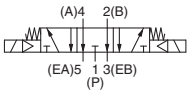

3-position pressure centre

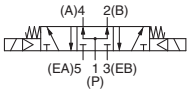

3-position closed centre/exhaust centre/pressure centre

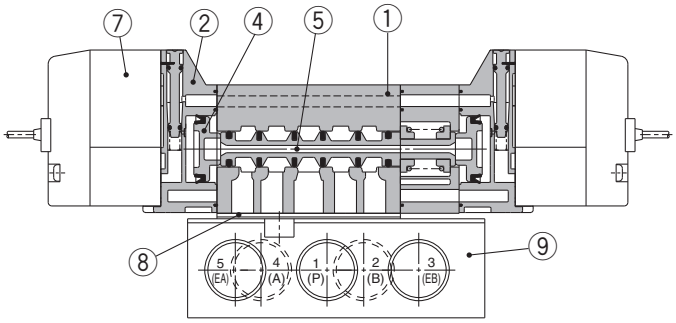

(Drawing shows a closed centre type.)

Sub-plate part no.

VF 3 000−71− 1 ☐

Series

3	VF3000
5	VF5000

Port size

Symbol	Port size	VF3000	VF5000
1	1/4	○	○
2	3/8	○	○
3	1/2	—	○

Thread type

—	Rc
F	G
N	NPT
T	NPTF

Component Parts

No.	Description	Material	Note
1	**Body**	Aluminium die-casted	White
2	**Adapter plate**	Resin	Grey
3	**End plate**	Resin	White
4	**Piston**	Resin	
5	**Spool valve**	Aluminium, HNBR	
6	**Spring**	Stainless steel	

Replacement Parts

No.	Description	Part no.		Note
		VF3000	**VF5000**	
7	**Pilot valve assembly**	Refer to “How to Order Pilot Valve Assembly” on page 19.		Built-in strainer
8	**Gasket**	DXT031-30-11	DXT156-9-8	HNBR
9	**Sub-plate**	1/4: VF3000-71-1☐ 3/8: VF3000-71-2☐	1/4: VF5000-71-1☐ 3/8: VF5000-71-2☐ 1/2: VF5000-71-3☐	Aluminium die-casted
—	**Round head combination screw (1 pc.)**	DXT031-44-1 (M4 x 39.5, With spring washer)	—	For mounting valve
—	**Hexagon socket head cap screw (1 pc.)**	—	AXT620-32-1 (M4 x 48, With spring washer)	For mounting valve

⚠ Caution

Tightening Torque for Mounting Valve

M4: 1.4 N·m

How to Order Pilot Valve Assembly (With a gasket and two mounting screws)

⚠ Caution

When only the pilot valve assembly is replaced, it is not possible to change from V211 (Grommet or L/M-type) to V212 (DIN or Conduit type), or vice versa.

Valve model: VF□□□□□□□-5GZ□1-□□□

∗ Select from the below in accordance with the valve used.

■ Grommet or L/M-type

V211□□-5GZ

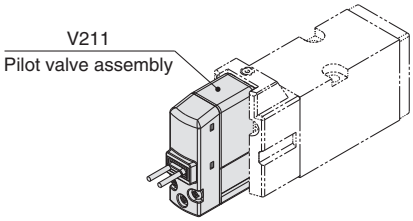

Light/Surge voltage suppressor

		DC	AC
—	Without light/surge voltage suppressor	○	○
S	With surge voltage suppressor	○	—Note)
Z	With light/surge voltage suppressor	○	○
R	With surge voltage suppressor (Non-polar)	○	—
U	With light/surge voltage suppressor (Non-polar)	○	—

Note) S type is not available with AC mode, since a rectifier prevents surge voltage generation. When T is selected, only Z type of light/surge voltage suppressor is available.

⚠ Caution

When using the surge voltage suppressor type, residual voltage will remain. Refer to page 51 for details.

Electrical entry

G	Grommet (Lead wire length 300 mm)	
H	Grommet (Lead wire length 600 mm)	
L	L-type plug connector	With lead wire
LN		Without lead wire
LO		Without connector
M	M-type plug connector	With lead wire
MN		Without lead wire
MO		Without connector

Note 1) LN and MN types are with 2 sockets.
Note 2) Refer to page 49 when different length of lead wire for L/M-type plug connector is required.

■ DIN or Conduit type

V212□□-5

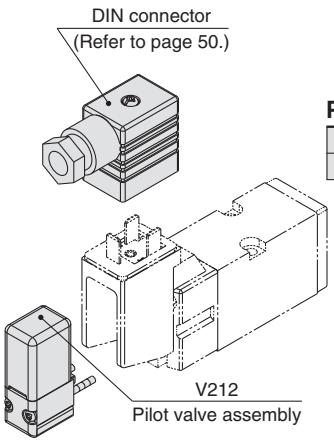

Pressure specifications

—	Standard (0.7 MPa)
K	High-pressure type (1 MPa)

Coil specifications

—	Standard
T	With power saving circuit (DC only)

Note) T type is available with DC mode only.

Rated voltage

DC

5	24 VDC
6	12 VDC

AC (50/60 Hz)

1	100 VAC
2	200 VAC
3	110 VAC [115 VAC]
4	220 VAC [230 VAC]
7	240 VAC
B	24 VAC

⚠ Caution

For V212 (DIN or Conduit type), the coil specifications and voltage (including light/surge voltage suppressor) cannot be changed by replacing the pilot valve assembly.

⚠ Caution

Tightening torque of the pilot valve assembly mounting screw
M2.5: 0.32 N·m

Dimensions: Series VF3000/Base Mounted

2-position single

Grommet (G) (H): VF3140-□$^{G}_{H}$□□1-$^{02}_{03}$□

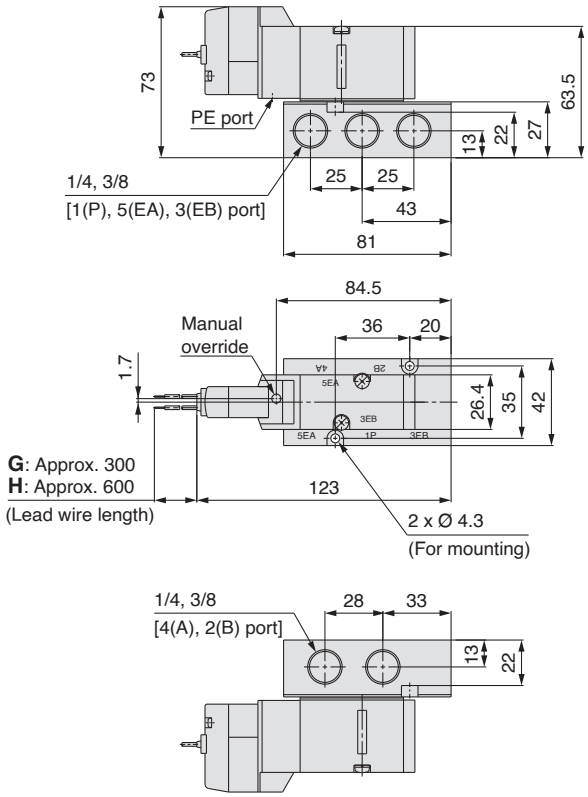

Grommet (G) (H)
DC without light/surge voltage suppressor

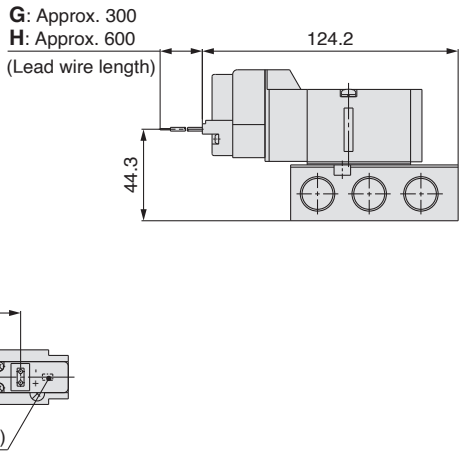

L-type plug connector (L): VF3140-□L□□1-$^{02}_{03}$□

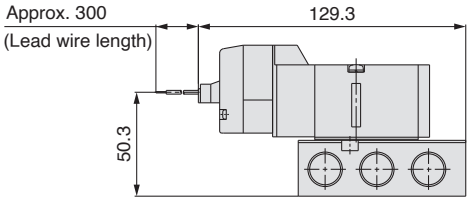

Unless otherwise indicated, dimensions are the same as Grommet (G).

DIN terminal (D) (Y): VF3140-□$^{D}_{Y}$□□1-$^{02}_{03}$□

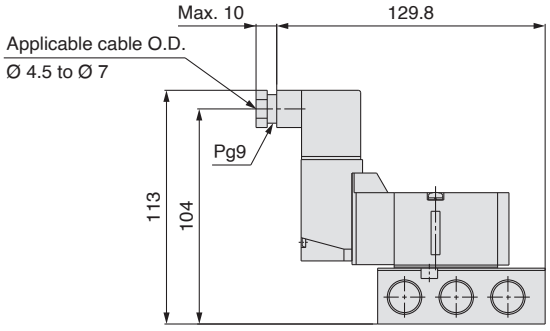

Unless otherwise indicated, dimensions are the same as Grommet (G).

M-type plug connector (M): VF3140-□M□□1-$^{02}_{03}$□

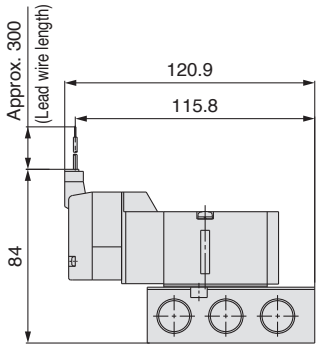

Unless otherwise indicated, dimensions are the same as Grommet (G).

Conduit terminal (T): VF3140-□T□□1-$^{02}_{03}$□

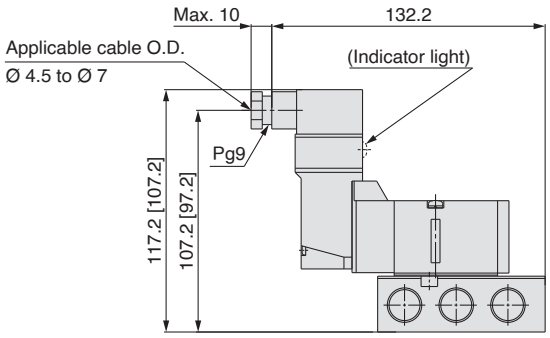

[ ]: Without indicator light
Unless otherwise indicated, dimensions are the same as Grommet (G).

Dimensions: Series VF3000/Base Mounted

2-position double

Grommet (G) (H): VF3240-□$^{G}_{H}$□□1-$^{02}_{03}$□

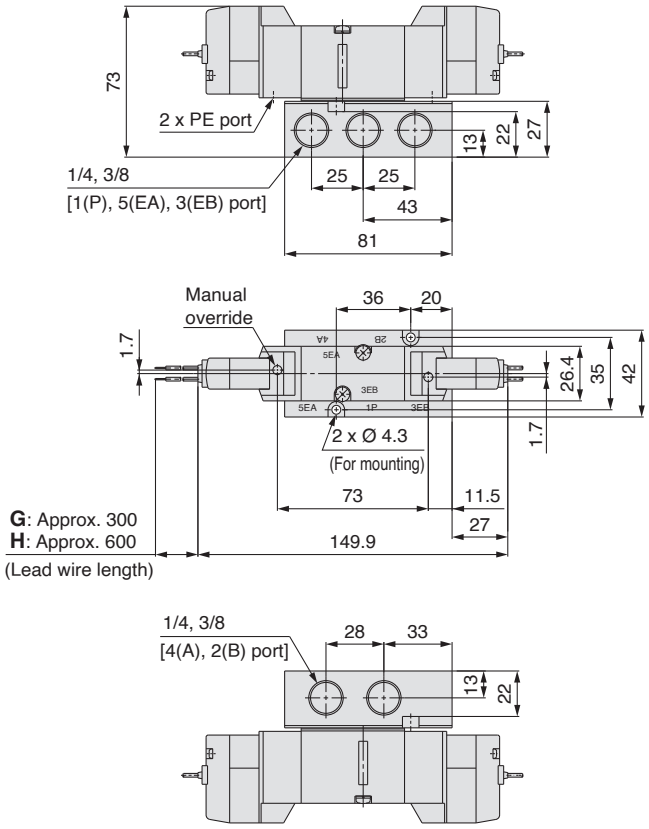

Grommet (G) (H)

DC without light/surge voltage suppressor

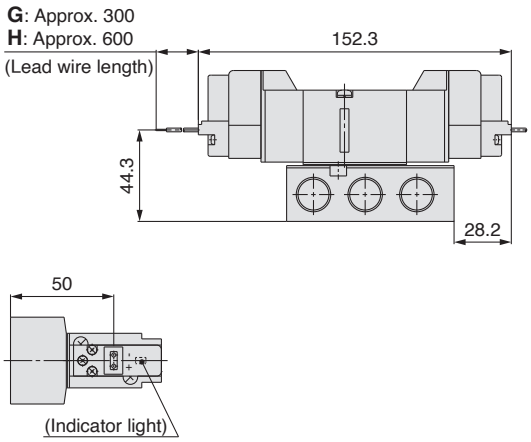

L-type plug connector (L): VF3240-□L□□1-$^{02}_{03}$□

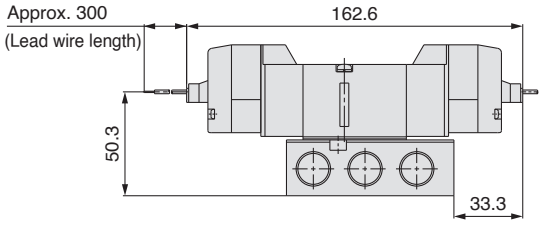

Unless otherwise indicated, dimensions are the same as Grommet (G).

DIN terminal (D) (Y): VF3240-□$^{D}_{Y}$□□1-$^{02}_{03}$□

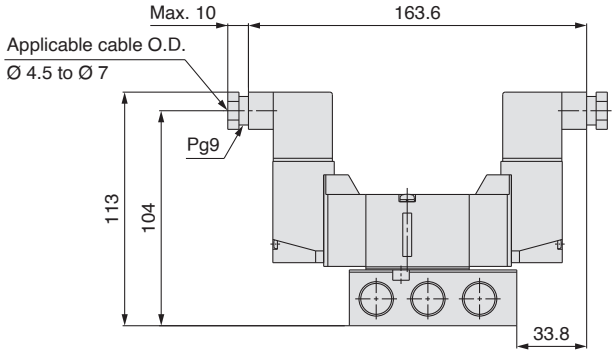

Unless otherwise indicated, dimensions are the same as Grommet (G).

M-type plug connector (M): VF3240-□M□□1-$^{02}_{03}$□

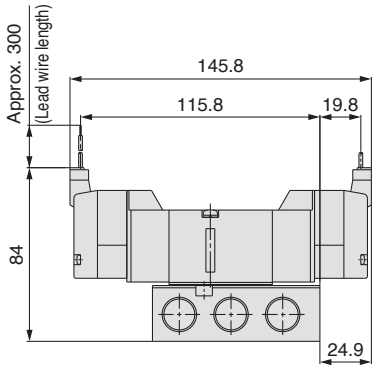

Unless otherwise indicated, dimensions are the same as Grommet (G).

Conduit terminal (T): VF3240-□T□□1-$^{02}_{03}$□

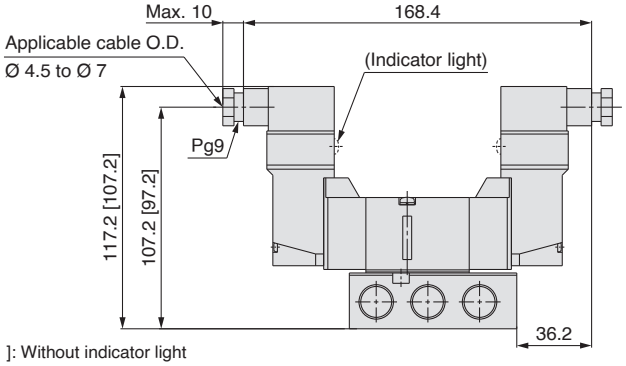

[ ]: Without indicator light

Unless otherwise indicated, dimensions are the same as Grommet (G).

Dimensions: Series VF3000/Base Mounted

3-position closed centre/exhaust centre/pressure centre

Grommet (G) (H): VF3$^{3}_{4}_{5}$40-□$^{G}_{H}$□□1-$^{02}_{03}$□

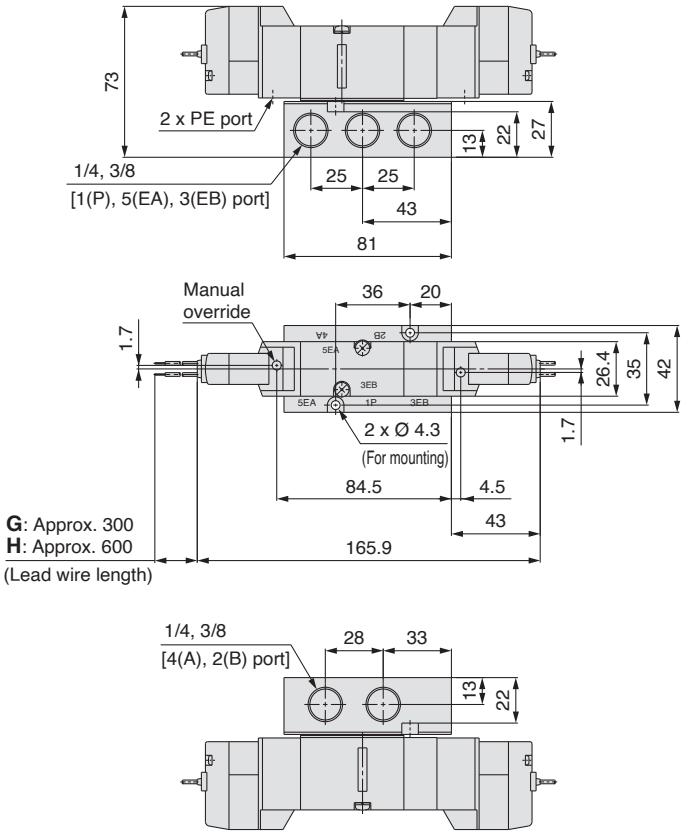

Grommet (G) (H)
DC without light/surge voltage suppressor

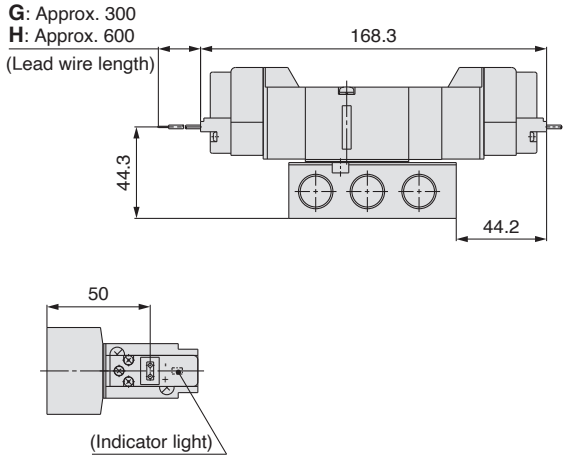

L-type plug connector (L): VF3$^{3}_{4}_{5}$40-□L□□1-$^{02}_{03}$□

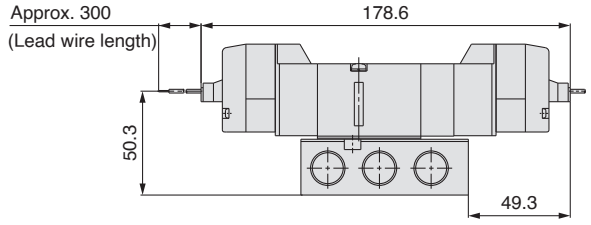

Unless otherwise indicated, dimensions are the same as Grommet (G).

DIN terminal (D) (Y): VF3$^{3}_{4}_{5}$40-□$^{D}_{Y}$□□1-$^{02}_{03}$□

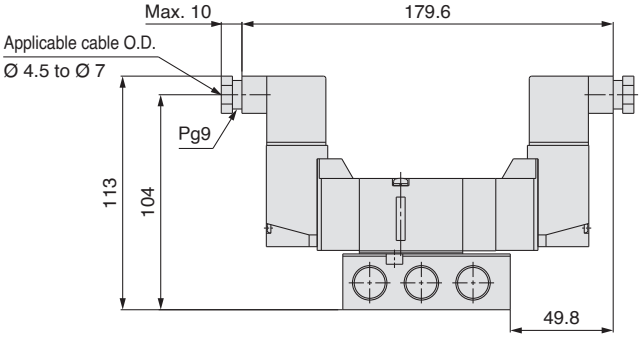

Unless otherwise indicated, dimensions are the same as Grommet (G).

M-type plug connector (M): VF3$^{3}_{4}_{5}$40-□M□□1-$^{02}_{03}$□

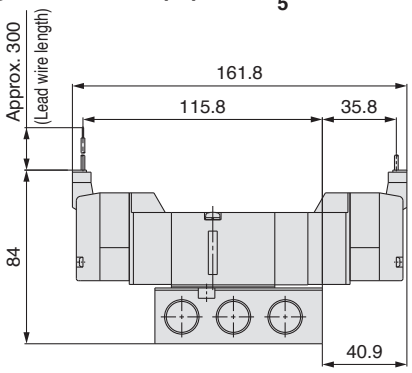

Unless otherwise indicated, dimensions are the same as Grommet (G).

Conduit terminal (T): VF3$^{3}_{4}_{5}$40-□T□□1-$^{02}_{03}$□

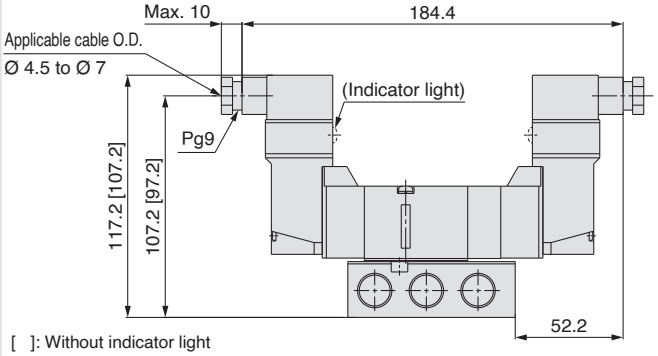

[ ]: Without indicator light
Unless otherwise indicated, dimensions are the same as Grommet (G).

Dimensions: Series VF5000/Base Mounted

2-position single

Grommet (G) (H): VF5144-□$^{G}_{H}$□□1-$^{02}_{03}_{04}$□

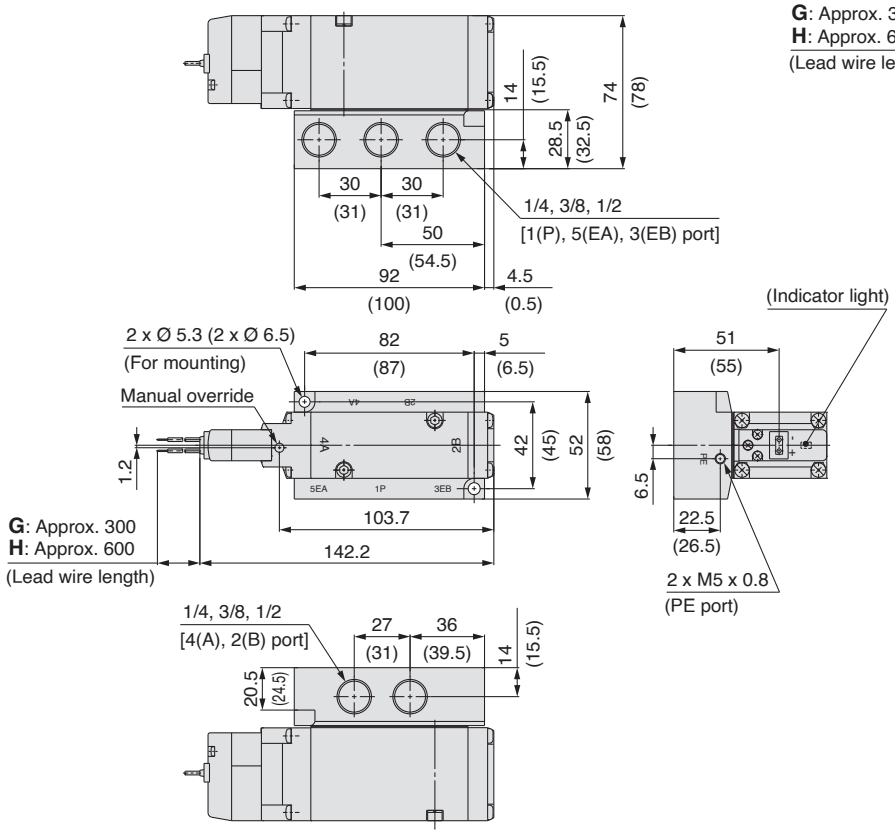

Grommet (G) (H)
DC without light/surge voltage suppressor

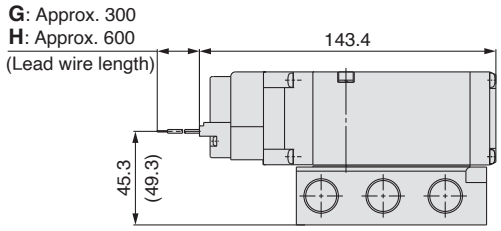

The dimensions in ( ) are for 1/2 piping port size.

L-type plug connector (L): VF5144-□L□□1-$^{02}_{03}_{04}$□

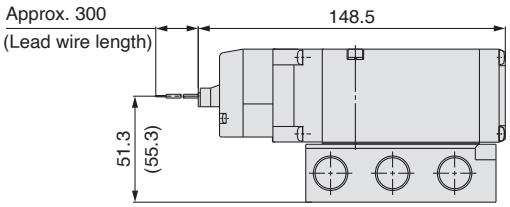

Unless otherwise indicated, dimensions are the same as Grommet (G).
The dimensions in ( ) are for 1/2 piping port size.

DIN terminal (D) (Y): VF5144-□$^{D}_{Y}$□□1-$^{02}_{03}_{04}$□

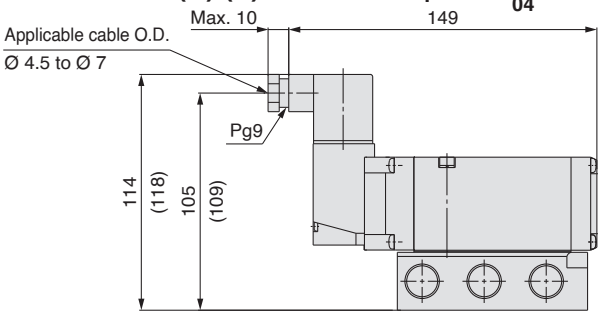

Unless otherwise indicated, dimensions are the same as Grommet (G).
The dimensions in ( ) are for 1/2 piping port size.

M-type plug connector (M): VF5144-□M□□1-$^{02}_{03}_{04}$□

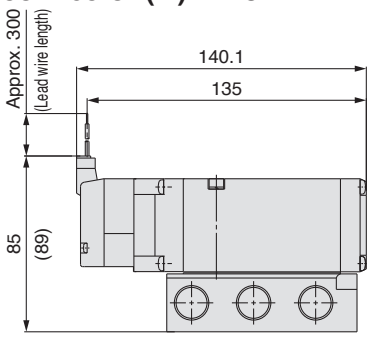

Unless otherwise indicated, dimensions are the same as Grommet (G).
The dimensions in ( ) are for 1/2 piping port size.

Conduit terminal (T): VF5144-□T□□1-$^{02}_{03}_{04}$□

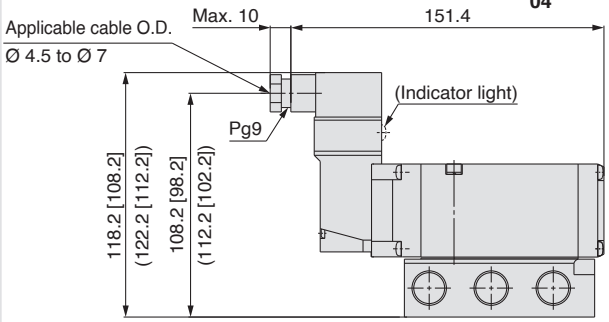

Unless otherwise indicated, dimensions are the same as Grommet (G).
[ ]: Without indicator light
The dimensions in ( ) are for 1/2 piping port size.

Dimensions: Series VF5000/Base Mounted

2-position double

Grommet (G) (H): VF5244-□$^{G}_{H}$□□1-$^{02}_{03}_{04}$□

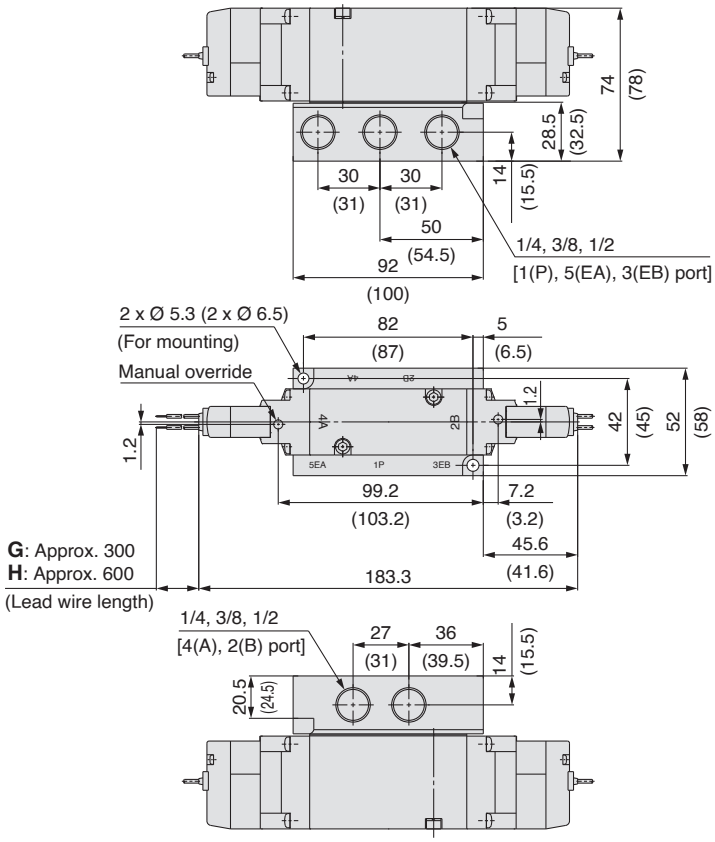

Grommet (G) (H)

DC without light/surge voltage suppressor

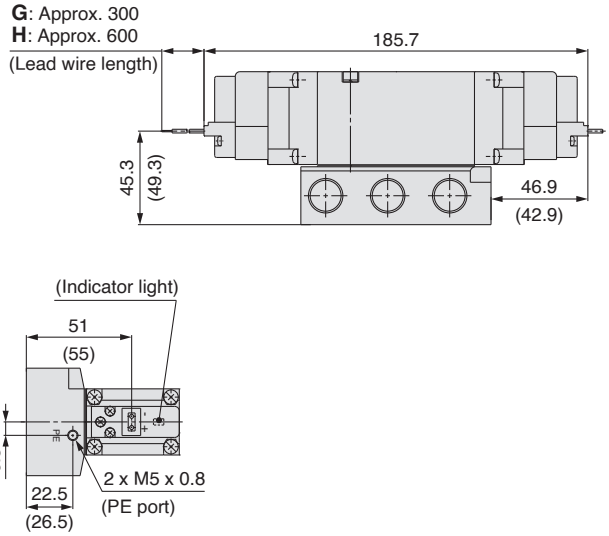

The dimensions in ( ) are for 1/2 piping port size.

L-type plug connector (L): VF5244-□L□□1-$^{02}_{03}_{04}$□

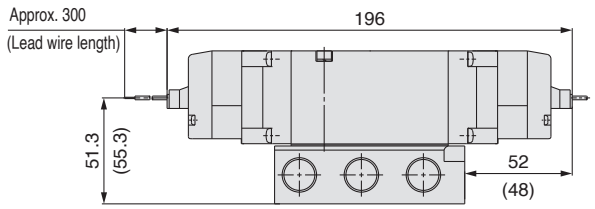

Unless otherwise indicated, dimensions are the same as Grommet (G).
The dimensions in ( ) are for 1/2 piping port size.

DIN terminal (D) (Y): VF5244-□$^{D}_{Y}$□□1-$^{02}_{03}_{04}$□

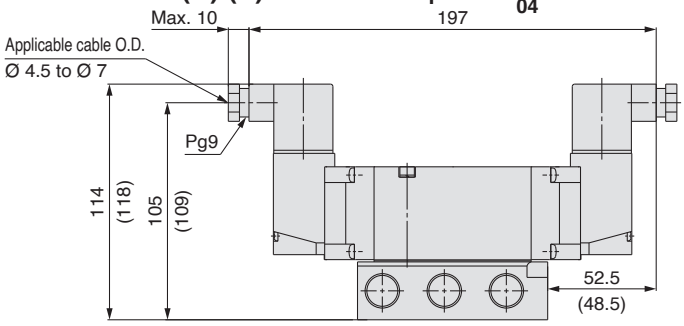

Unless otherwise indicated, dimensions are the same as Grommet (G).
The dimensions in ( ) are for 1/2 piping port size.

M-type plug connector (M): VF5244-□M□□1-$^{02}_{03}_{04}$□

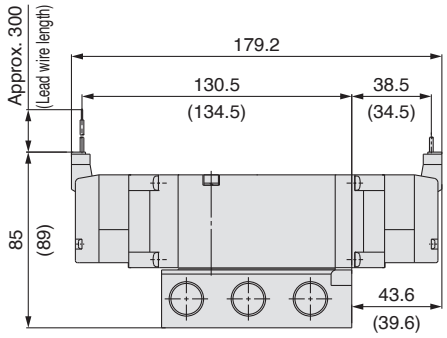

Unless otherwise indicated, dimensions are the same as Grommet (G).
The dimensions in ( ) are for 1/2 piping port size.

Conduit terminal (T): VF5244-□T□□1-$^{02}_{03}_{04}$□

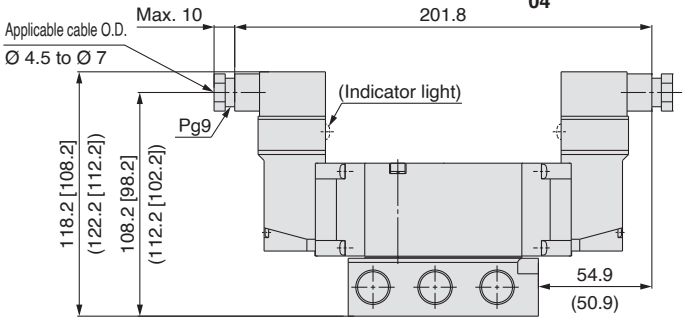

Unless otherwise indicated, dimensions are the same as Grommet (G).
[ ]: Without indicator light
The dimensions in ( ) are for 1/2 piping port size.

Dimensions: Series VF5000/Base Mounted

3-position closed centre/exhaust centre/pressure centre

Grommet (G) (H): VF5$^{3}_{4}_{5}$44-□$^{G}_{H}$□□1-$^{02}_{03}_{04}$□

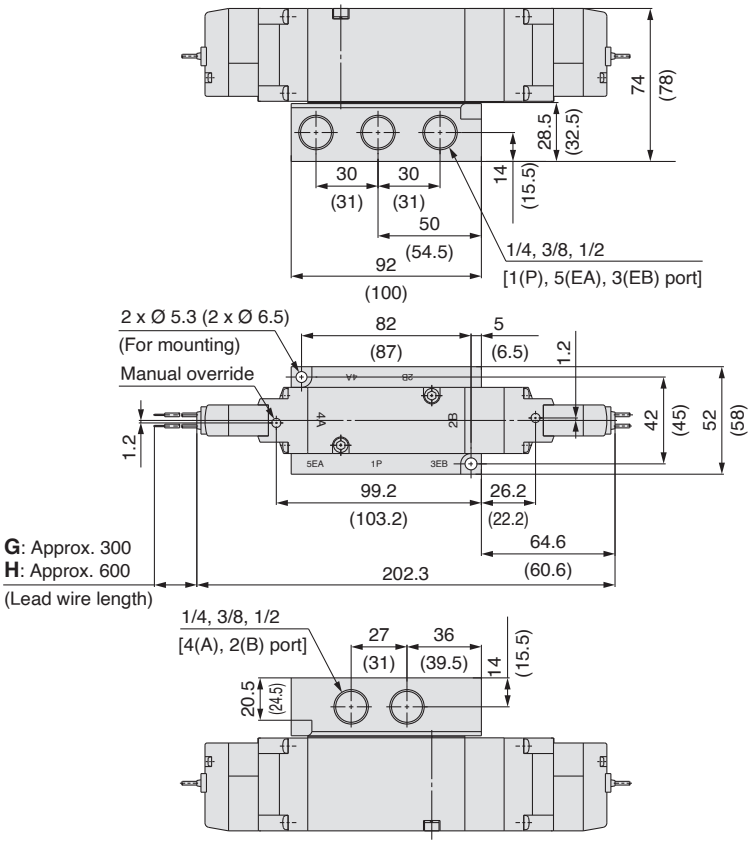

Grommet (G) (H)

DC without light/surge voltage suppressor

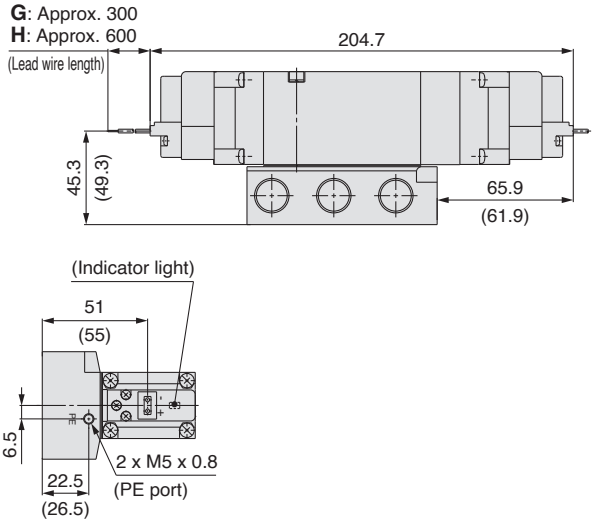

The dimensions in ( ) are for 1/2 piping port size.

L-type plug connector (L): VF5$^{3}_{4}_{5}$44-□L□□1-$^{02}_{03}_{04}$□

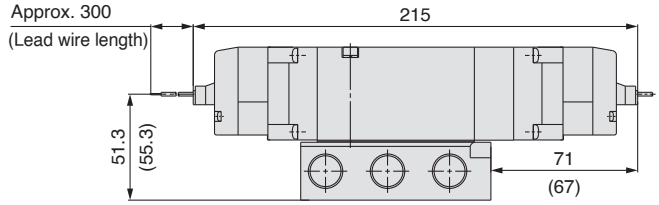

Unless otherwise indicated, dimensions are the same as Grommet (G).
The dimensions in ( ) are for 1/2 piping port size.

DIN terminal (D) (Y): VF5$^{3}_{4}_{5}$44-□$^{D}_{Y}$□□1-$^{02}_{03}_{04}$□

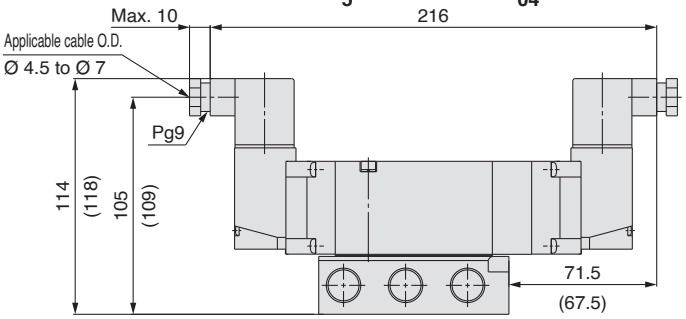

Unless otherwise indicated, dimensions are the same as Grommet (G).
The dimensions in ( ) are for 1/2 piping port size.

M-type plug connector (M): VF5$^{3}_{4}_{5}$44-□M□□1-$^{02}_{03}_{04}$□

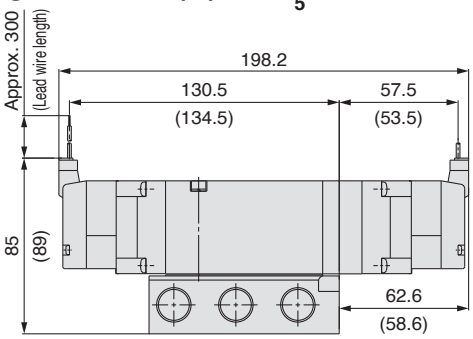

Unless otherwise indicated, dimensions are the same as Grommet (G).
The dimensions in ( ) are for 1/2 piping port size.

Conduit terminal (T): VF5$^{3}_{4}_{5}$44-□T□□1-$^{02}_{03}_{04}$□

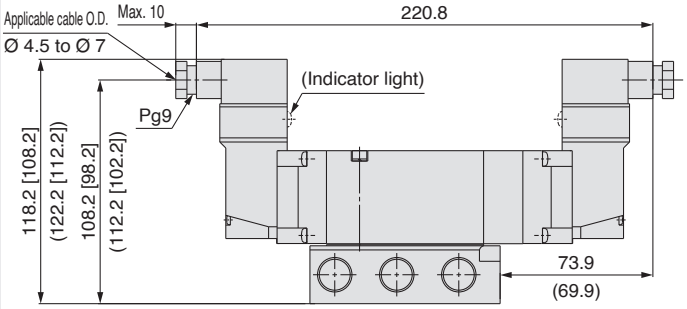

Unless otherwise indicated, dimensions are the same as Grommet (G).
[ ]: Without indicator light
The dimensions in ( ) are for 1/2 piping port size.

Body Ported
Base Mounted

Low Wattage Specification

RoHS

VF1000/3000 Series

Single Unit

Note) AC-type models that are CE/UKCA-compliant have DIN terminals only.
Refer to the electrical entry for details.

How to Order Valve

VF 3 1 3 0 Y – 5 G □ □ 1 – 02 □ – □

Series

1	VF1000
3	VF3000

Type of actuation

1	2-position single
2	2-position double
3	3-position closed center
4	3-position exhaust center
5	3-position pressure center

∗ Only 1 and 2 are available with the VF1000.

Body model

		Mountable manifold		
		30	31	40
2	VF1000 Body ported	—	—	—
3	VF1000 Body ported (For manifold)	● Note 1)	● Note 1)	—
	VF3000 Body ported	● Note 1)	—	—
4	VF3000 Base mounted	—	—	● Note 2)

Note 1) Refer to page 30.
Note 2) Refer to page 41.

Body option

0: Pilot valve individual exhaust

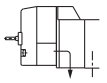

PE port EA/EB port

VF1000	VF3000
○	○

3: Main/Pilot valve common exhaust

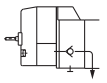

PE port EA/EB port

VF1000	VF3000
●∗	○

∗ Only available for body ported (for manifold) type.

Low wattage type

Rated voltage

1	100 VAC
2	200 VAC
3	110 VAC
4	220 VAC
5	24 VDC
6	12 VDC

Bracket

—	Without bracket
F	With bracket Available with the VF1120, VF1220 and VF3130 only.

Thread type

—	Rc, M5
F	G
N	NPT
T	NPTF

<Body ported> A, B port size

M5	M5 x 0.8 (VF1000)
01	1/8 (VF1000, VF3000)
02	1/4 (VF3000)

<Base mounted> Sub-plate port size

—	Without sub-plate
02	Port size: 1/4
03	Port size: 3/8

Version symbol

Manual override

—	Non-locking push type
D	Push-turn locking slotted type
E	Push-turn locking lever type

Light/Surge voltage suppressor

Electrical entry for G, H, L, M

—	Without light/surge voltage suppressor
S	With surge voltage suppressor
Z	With light/surge voltage suppressor
R	With surge voltage suppressor (Non-polar type)
U	With light/surge voltage suppressor (Non-polar type)

∗ For AC voltage valves there is no "S" option. It is already built-in to the rectifier circuit.
∗ For "R" and "U", DC voltage is only available.

Electrical entry for D, Y

—	Without light/surge voltage suppressor
S	With surge voltage suppressor (Non-polar type)
Z	With light/surge voltage suppressor (Non-polar type)

∗ DOZ and YOZ are not available.
∗ For AC voltage valves there is no "S" option. It is already built-in to the rectifier circuit.

Electrical entry

		24 VDC, 12 VDC/100 VAC, 110 VAC, 200 VAC, 220 VAC				24 VDC, 12 VDC 100 VAC, 110 VAC, 200 VAC, 220 VAC	
		Grommet	L-type plug connector	M-type plug connector		DIN terminal	
		G: Lead wire length 300 mm	**L:** With lead wire (length 300 mm)	**M:** With lead wire (length 300 mm)	**MN:** Without lead wire	[IP65 compatible] **D:** With connector	[IP65 compatible] **Y:** With connector
				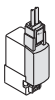		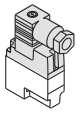	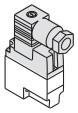
		H: Lead wire length 600 mm	**LN:** Without lead wire	**LO:** Without connector	**MO:** Without connector	**DO:** Without connector	**YO:** Without connector
							
CE/UKCA compliant	DC	●	●		●	●	●
	AC	—	—		—	●	●

∗ LN and MN types are with 2 sockets.
∗ Y type DIN terminal complies with EN-175301-803C (former DIN 43650C). Refer to page 55 for details.

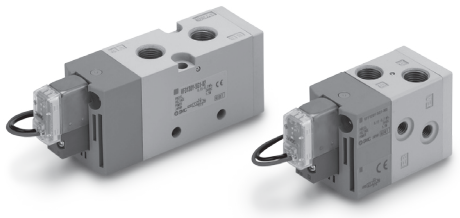

Specifications

Model		VF1000	VF3000
Fluid		Air	
Internal pilot operating pressure range [MPa]	**2-position single/3-position**	0.15 to 0.7	
	2-position double	0.1 to 0.7	
Ambient and fluid temperature [°C]		–10 to 50 (No freezing)	
Max. operating frequency [Hz]	**2-position single/double**	5	5
	3-position	3	3
Manual override		Non-locking push type Push-turn locking slotted type Push-turn locking lever type	
Pilot exhaust type		Individual exhaust, Main/Pilot valve common exhaust (Except VF1000)	
Lubrication		Not required	
Mounting orientation		Unrestricted	
Impact/Vibration resistance [m/s²] Note 2)		150/30	
Enclosure		Dustproof (IP65 Note 1) for DIN terminal)	

Note 1) Based on IEC 60529.
Note 2) Impact resistance: No malfunction occurred when it is tested in the axial direction and at the right angles to the main valve and armature in both energized and de-energized states every once for each condition. (Values at the initial period)
Vibration resistance: No malfunction occurred in a one-sweep test between 45 and 2000 Hz. Test was performed at both energized and de-energized states in the axial direction and at the right angles to the main valve and armature. (Values at the initial period)

Solenoid Specifications

Electrical entry			Grommet (G), (H) L-type plug connector (L) M-type plug connector (M)	DIN terminal (D), (Y)
			G, H, L, M	D, Y
Coil rated voltage [V]		**DC**	24, 12	
		AC (50/60 Hz)	—	100, 110, 200, 220
Allowable voltage fluctuation			±10 % of rated voltage Note 1,2,3)	
Power consumption [W]	**DC**	**Standard**	0.35 {With light: 0.4 (With light of DIN terminal: 0.45)}	
Note 1,2,3) **Apparent power [VA]**	**AC**	**100 V**	—	0.78 (With light: 0.87)
		110 V [115 V]	—	0.86 (With light: 0.97) [0.94 (With light: 1.07)]
		200 V	—	1.15 (With light: 1.30)
		220 V [230 V]	—	1.27 (With light: 1.46) [1.39 (With light: 1.60)]
Surge voltage suppressor			Diode (DIN terminal, Non-polar type: Varistor)	
Indicator light			LED (Neon light is used for AC mode of DIN terminal.)	

∗ It is in common between 110 VAC and 115 VAC, and between 220 VAC and 230 VAC.
∗ Allowable voltage fluctuation is –15 % to +5 % of the rated voltage for 115 VAC or 230 VAC.
∗ For details, refer to page 54.

Response Time

Series	Type of actuation	Response time [ms] (at 0.5 MPa)			
		Without light/surge voltage suppressor	With light/surge voltage suppressor		AC
			S, Z type	R, U type	
VF1000	2-position single	45	55	45	45
	2-position double	12	12	12	12
VF3000	2-position single	55	63	55	50
	2-position double	14	14	14	16
	3-position	100	100	90	90

Note) Based on dynamic performance test, JIS B 8419: 2010.
(Coil temperature: 20 °C, at rated voltage)

Dimensions

VF1000

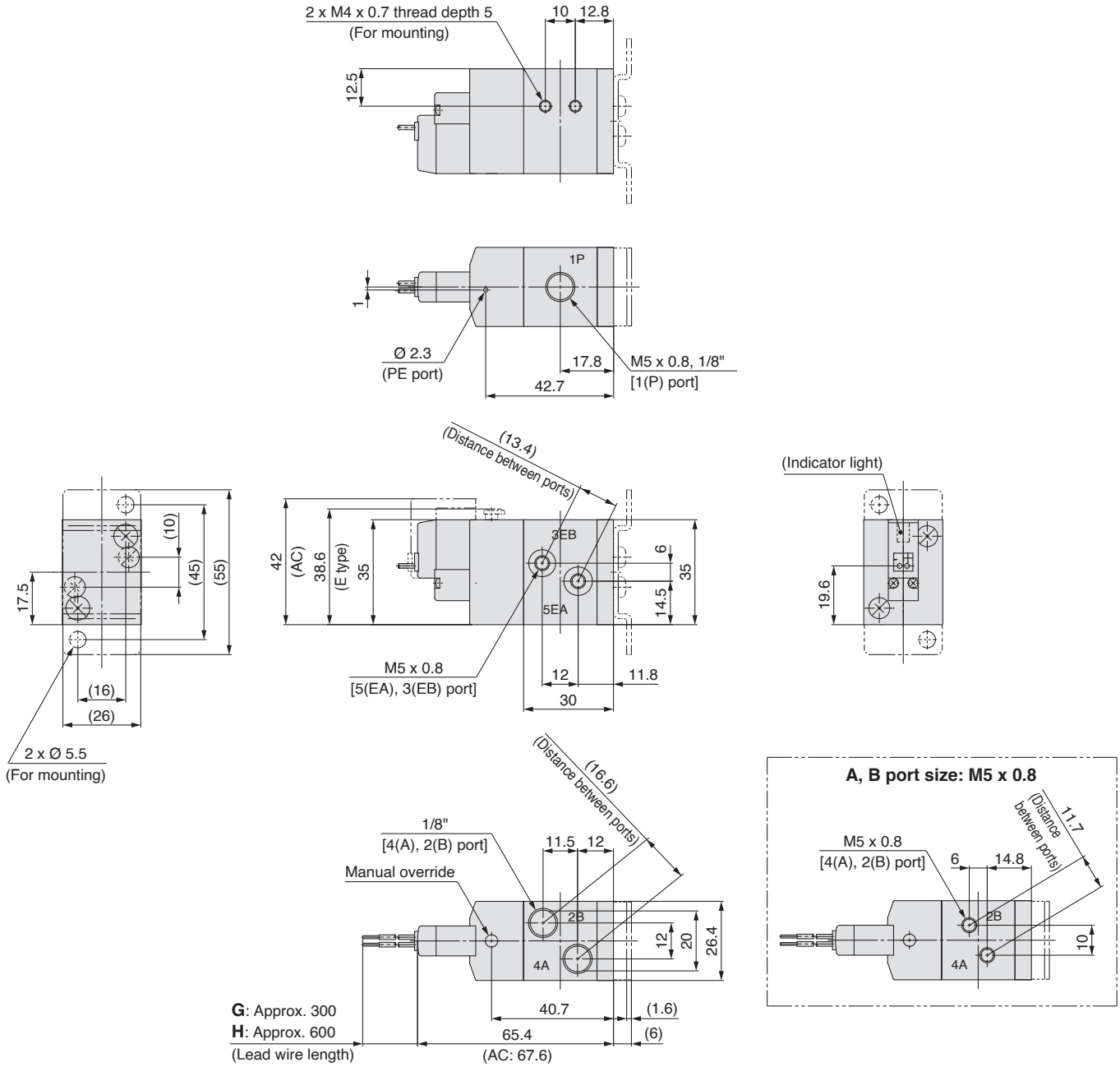

L-type plug connector (L)

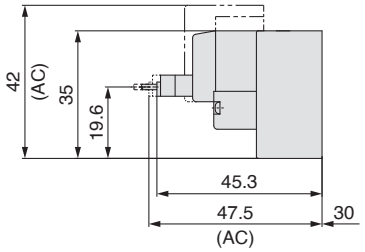

M-type plug connector (M)

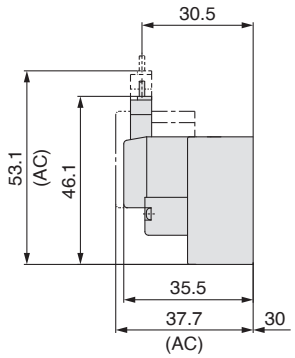

DIN terminal (D) (Y)

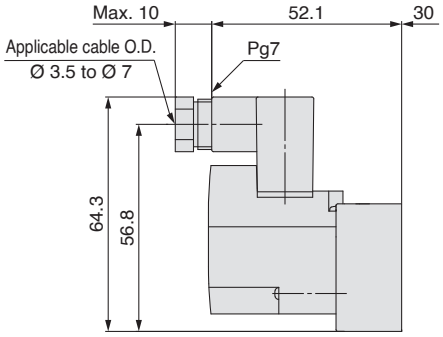

Dimensions

VF3000

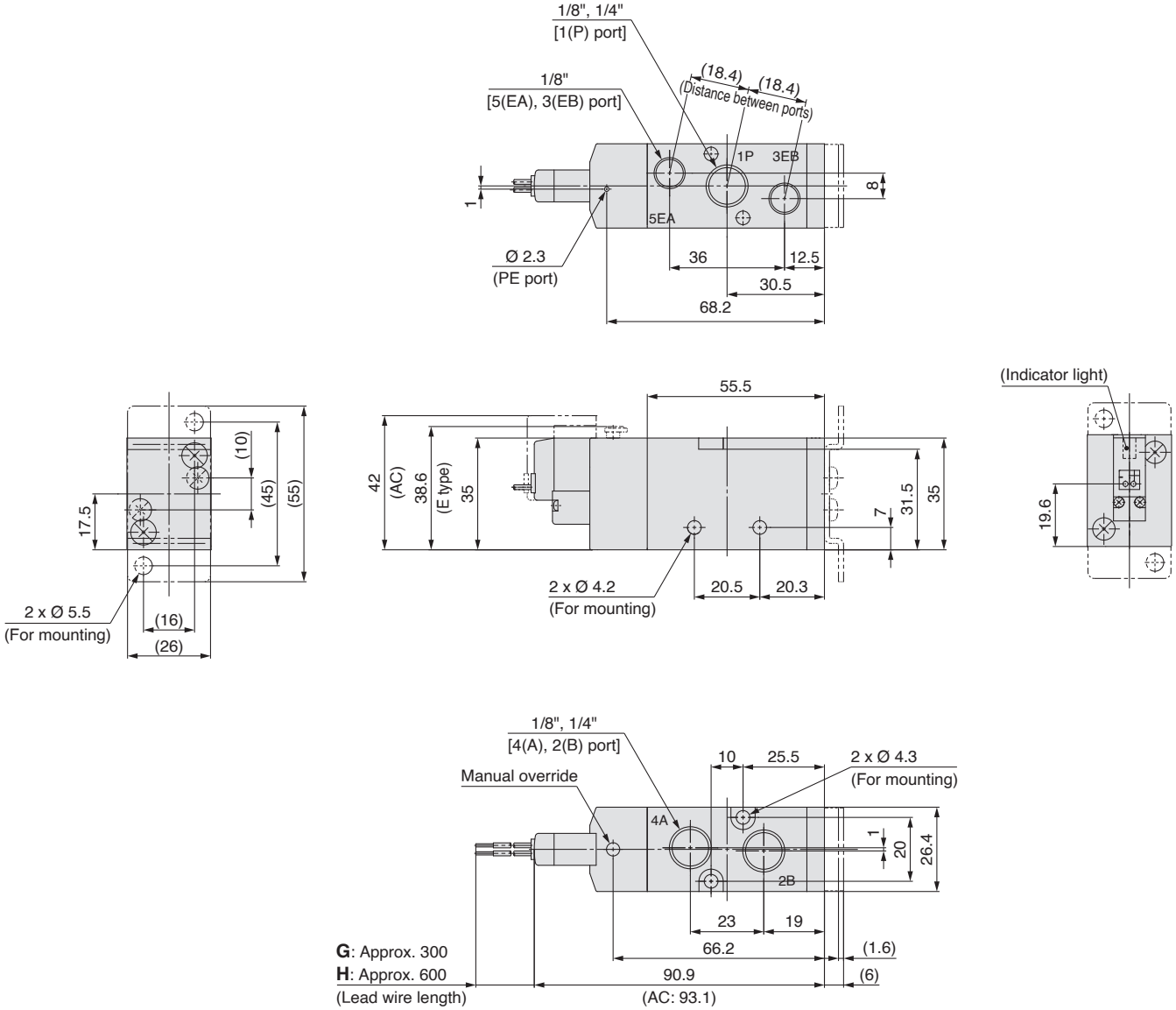

L-type plug connector (L)

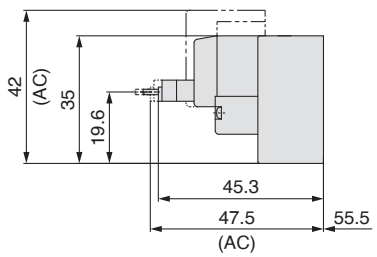

M-type plug connector (M)

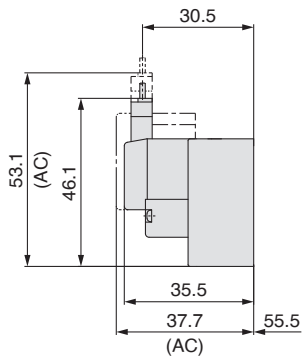

DIN terminal (D) (Y)

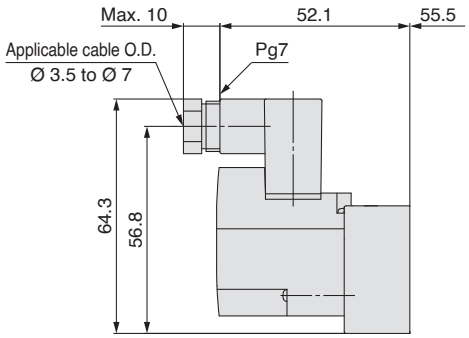

Pilot Operated 5 Port Solenoid Valve

VF1000/3000/5000 Series

Body Ported Manifold

Note) Only DIN and conduit terminal types are available with AC mode.
Refer to the electrical entry for details.

∗ See the table below.

Note) Pressure specifications:
0.7 MPa, DC or 24 VAC only
Only applies to X500 for made-to-order specifications

How to Order Manifold

Common exhaust

VV5F 1 – 30 – 04 1 – ☐

Series

1	VF1000
3	VF3000
5	VF5000

Manifold model

Symbol	P, R port size	VF1000	VF3000	VF5000
30	1/8	○	—	—
	1/4	—	○	—
20	3/8	—	—	○
21	1/2	—	—	○

∗ The A and B ports are made on the top.

Stations

02	2 stations
⋮	⋮
20	20 stations

∗ Up to 10 stations for VV5F5-20, and up to 15 stations for VV5F5-21.

Thread type

—	Rc
00F	G
00N	NPT
00T	NPTF

Individual exhaust (VF1000 only)

VV5F1 – 31 – 04 3 – ☐

Stations

02	2 stations
⋮	⋮
20	20 stations

Thread type

—	Rc
00F	G
00N	NPT
00T	NPTF

Manifold model

Symbol	P, R port size	EA, EB port size
31	1/8	M5

Note) When placing an order for body ported valve as a single unit, mounting screws for manifold and gasket are not attached. Order them separately, if necessary. ∗ Except VF1000 (Refer to page 32 for details.)

How to Order Valve

∗ For low wattage specification, refer to "How to Order Valve" on page 26.

VF 3 1 3 0 ☐ ☐ – 5 G ☐ ☐ 1 – 01 ☐ – ☐

Series

1	VF1000
3	VF3000
5	VF5000

Type of actuation

1	2-position single
2	2-position double
3	3-position closed center
4	3-position exhaust center
5	3-position pressure center

∗ Only 1 and 2 are available with the VF1000.

Body option

0: Pilot valve individual exhaust			3: Main/Pilot valve common exhaust		
PE port EA/EB port			PE port EA/EB port		
VF1000	VF3000	VF5000	VF1000	VF3000	VF5000
○	○	○	○	○	○

Body model

Symbol	VF1000	VF3000	VF5000
2	—	—	○
3	○ Note)	○	—

Note) Manifold only.

Coil specifications

—	Standard
T	With power saving circuit (DC only)

Note) Be sure to select the power saving circuit type when it is continuously energized for long periods of time. (Refer to page 51 for details.)

∗ T type is available with DC mode only. When T is selected, only Z type of light/surge voltage suppressor is available. (Note that when the electrical entry of DIN terminal type without connector is selected, only DOS and YOS are available.)

Pressure specifications

		UL-compliant
—	Standard (0.7 MPa)	•
K	High-pressure type (1 MPa)	—

Rated voltage

DC		UL-compliant
5	24 VDC	•
6	12 VDC	•

AC (50/60 Hz) Note)		UL-compliant			UL-compliant
1	100 VAC	—	4	220 VAC [230 VAC]	—
2	200 VAC	—	7	240 VAC	—
3	110 VAC [115 VAC]	—	B	24 VAC	•

Note) For triac output, refer to the made-to-order specifications (X600).

Made to order

Refer to page 14 for details.
In addition, the -X600 is not compliant with UL standards.

A, B port size

Symbol	Port size	VF1000	VF3000	VF5000
M5	M5 x 0.8	○	—	—
01	1/8	○	○	—
02	1/4	—	○	○
03	3/8	—	—	○

Thread type

—	Rc
F	G
N	NPT
T	NPTF

∗ M5 is available with Nil only.

Light/Surge voltage suppressor

Symbol	Light/Surge voltage suppressor	DC	AC
—	Without light/surge voltage suppressor	○	○
S	With surge voltage suppressor	○	Note)
Z	With light/surge voltage suppressor	○	○
R	With surge voltage suppressor (Non-polar)	○	—
U	With light/surge voltage suppressor (Non-polar)	○	—

Note) S type is not available with AC mode, since a rectifier prevents surge voltage generation.
∗ In the DIN terminal type, since a light is installed in the connector, DOZ, DOU, YOZ, YOU are not available.

Manual override

—: Non-locking push type

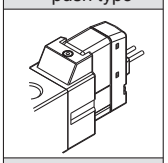

D: Push-turn locking slotted type

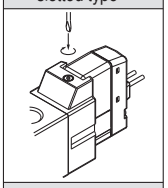

E: Push-turn locking lever type

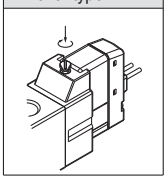

Electrical entry

Grommet		L-type plug connector		M-type plug connector		DIN terminal	DIN (EN175301-803) terminal	Conduit terminal
						[IP65 compatible]	[IP65 compatible]	[IP65 compatible]
G: Lead wire length 300 mm H: Lead wire length 600 mm	G: Lead wire length 300 mm H: Lead wire length 600 mm DC Without light/surge voltage suppressor	L: With lead wire (length 300 mm) LO: Without connector	LN: Without lead wire	M: With lead wire (length 300 mm) MO: Without connector	MN: Without lead wire	D: With connector DO: Without connector	Y: With connector YO: Without connector	T: Conduit terminal
CE compliant DC								
CE compliant AC Note 2)	—	—		—				

∗ LN and MN types are with 2 sockets. ∗ Refer to page 49 when different length of lead wire for L/M-type plug connector is required.
∗ Refer to page 50 for details on the DIN (EN175301-803) terminal.
Note 1) When using IP65, select the main/pilot valve common exhaust type.
Note 2) With the same specifications as the DC type, all electrical entries for the 24 VAC type are CE/UKCA marking compliant.

⚠ Caution

When using the surge voltage suppressor type, residual voltage will remain. Refer to page 51 for details.

Manifold Specifications

Series	VF1000		VF3000	VF5000	
Manifold base model	VV5F1-30 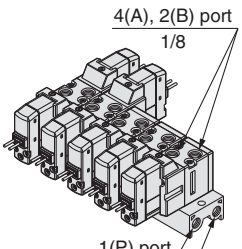 	VV5F1-31 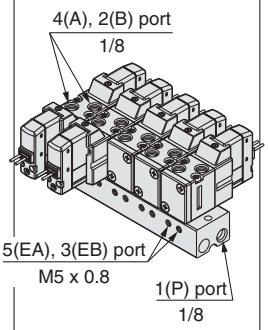 	VV5F3-30 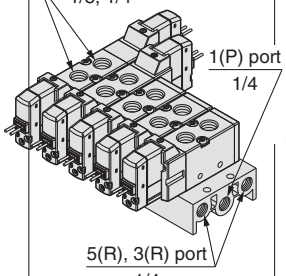 	VV5F5-20 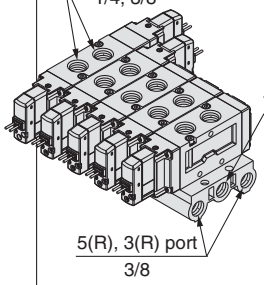 	VV5F5-21 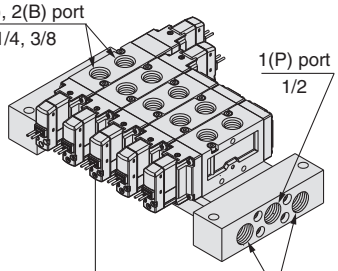
EXH port type	Common EXH	Individual EXH	Common EXH	Common EXH	Common EXH
Applicable valve model	**VF1□30** **VF1□33**		**VF3□30** **VF3□33**	**VF5□20** **VF5□23**	
Applicable stations	2 to 20 stations		2 to 20 stations	2 to 10 stations	2 to 15 stations
Manifold base Weight: W [g] Stations: n	W = 29n + 21	W = 51n + 35	W = 63n + 64	W = 97n + 80	W = 139n + 550

Note) Supply pressure to 1(P) ports and exhaust pressure from R ports on both sides for 10 stations or more (5 stations or more for the VF5000).

How to Order Manifold Assembly

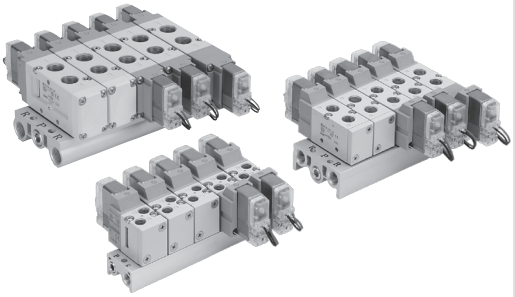

Example (VV5F3-30)

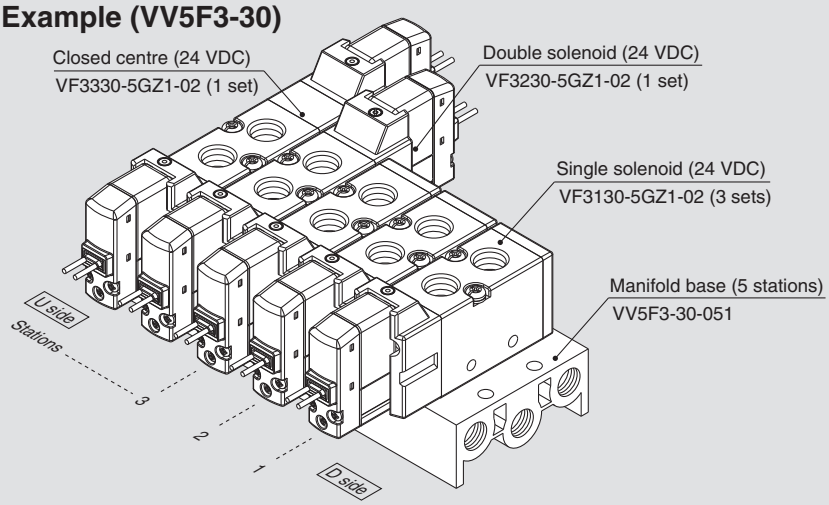

VV5F3-30-051 ····· 1 set (Type 30, 5-station manifold base part no.)
*** VF3130-5GZ1-02 ····· 3 sets (Single solenoid part no.)**
*** VF3230-5GZ1-02 ····· 1 set (Double solenoid part no.)**
*** VF3330-5GZ1-02 ····· 1 set (Closed centre part no.)**
The asterisk denotes the symbol for assembly. Prefix it to the part nos. of the solenoid valve, etc.

- The valve arrangement is numbered as the 1st station from D side.
- Under the manifold base part number, state the valves to be mounted in order from the 1st station as shown in the figure above. If the arrangement becomes complicated, specify on the manifold specification sheet.

Manifold Options

■ For body ported Blanking plate assembly

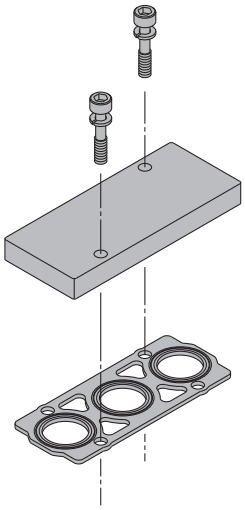

Series	Blanking plate assembly part no.
VF1000	DXT144-13-3A
VF3000	DXT031-38-5A
VF5000	VF5000-70-1A

■ Individual EXH spacer assembly

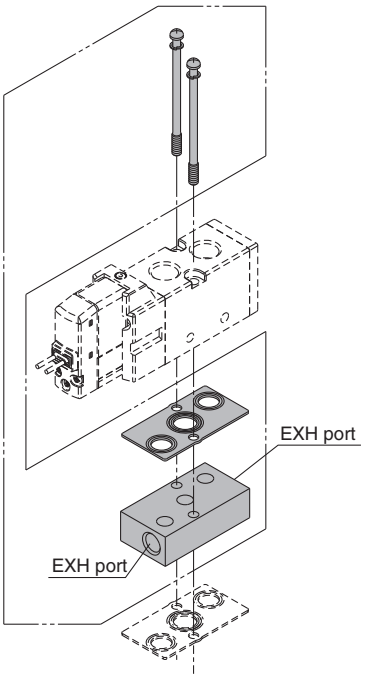

■ Mounting screw, gasket part no.

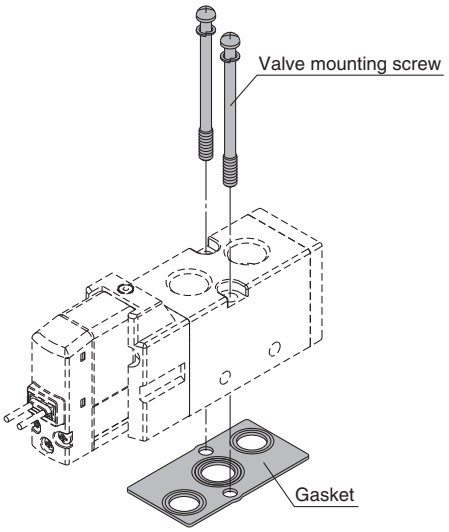

Series	Valve mounting screw (1 pc.)	Gasket
VF1000	Round head combination screw DXT031-44-1 (M4 x 39.5, With spring washer)	DXT144-12-2
VF3000		DXT155-25-7
VF5000	Hexagon socket head cap screw AXT620-32-1 (M4 x 48, With spring washer)	DXT156-9-6

⚠ Caution

Tightening Torque for Mounting Screw

M4: 1.4 N·m

⚠ Warning

When mounting a valve or spacer on the manifold base or sub-plate, etc., the mounting orientation is already decided. If mounted in a wrong direction, the equipment to be connected may result in a malfunction. Refer to the dimensions for mounting.

VF 3 000−75−1 □ A

Series

Symbol	Series	Port size
3	VF3000	1/8
5	VF5000	1/4

Thread type

—	Rc
F	G
N	NPT
T	NPTF

Dimensions: Series VF1000

Type 30/VV5F1-30-□□1-□: Common exhaust
Grommet (G) (H)

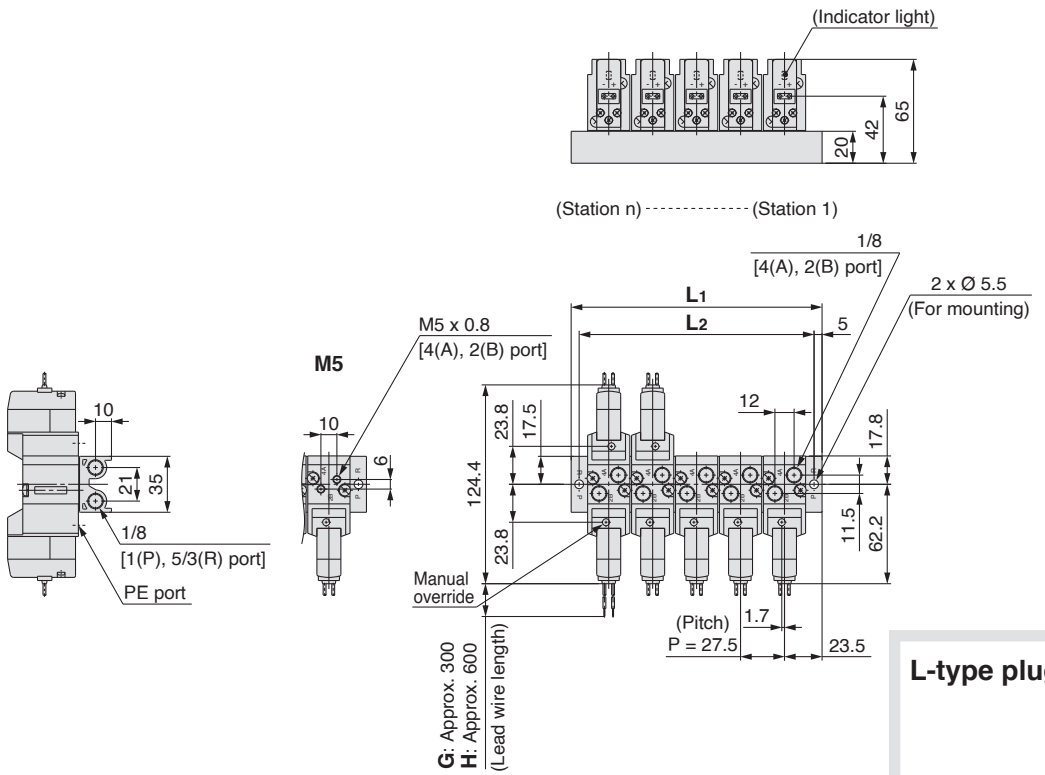

Grommet (G) (H)
DC without light/ surge voltage suppressor

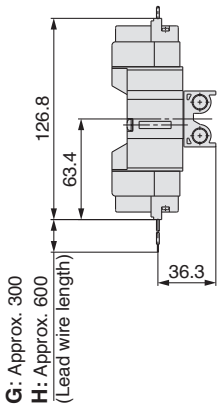

L-type plug connector (L)

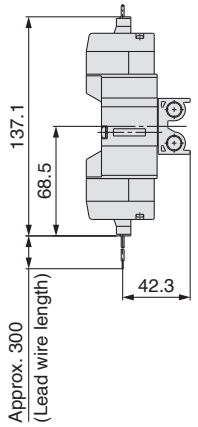

Unless otherwise indicated, dimensions are the same as Grommet (G).

L: Dimensions

n: Stations

L \ n	2	3	4	5	6	7	8	9	10	11	12	13	14
L1	74.5	102	129.5	157	184.5	212	239.5	267	294.5	322	349.5	377	404.5
L2	64.5	92	119.5	147	174.5	202	229.5	257	284.5	312	339.5	367	394.5

L \ n	15	16	17	18	19	20
L1	432	459.5	487	514.5	542	569.5
L2	422	449.5	477	504.5	532	559.5

M-type plug connector (M)

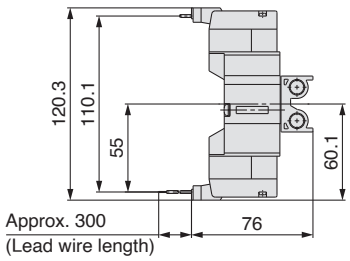

Unless otherwise indicated, dimensions are the same as Grommet (G).

DIN terminal (D) (Y)

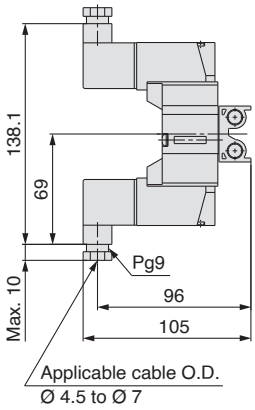

Unless otherwise indicated, dimensions are the same as Grommet (G).

Conduit terminal (T)

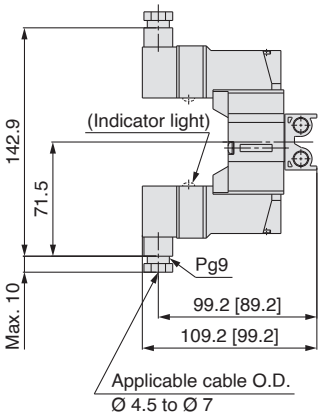

[ ]: Without indicator light
Unless otherwise indicated, dimensions are the same as Grommet (G).

Dimensions: Series VF1000

Type 31/VV5F1-31-□□3-□: Individual exhaust

Grommet (G) (H)

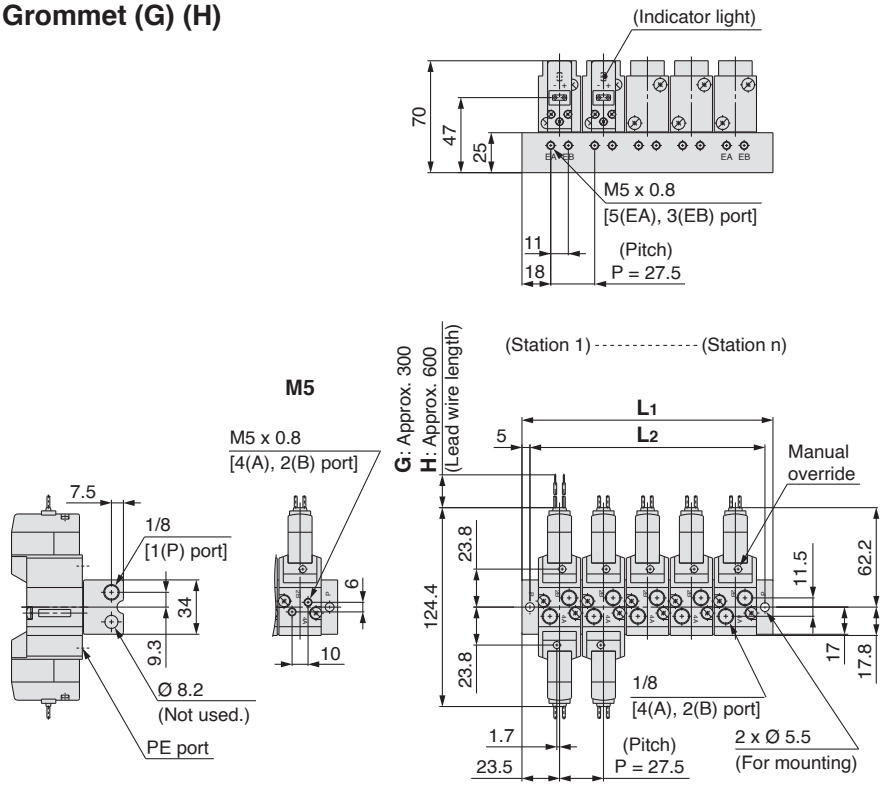

Grommet (G) (H)

DC without light/
surge voltage suppressor

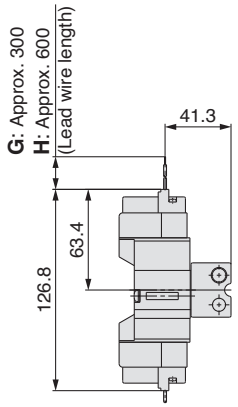

L-type plug connector (L)

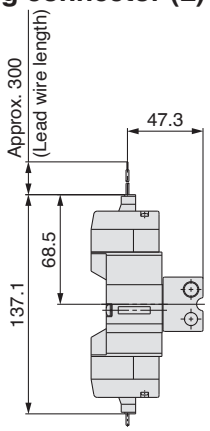

Unless otherwise indicated, dimensions are the same as Grommet (G).

L: Dimensions

n: Stations

L \ n	2	3	4	5	6	7	8	9	10	11	12	13	14
L1	74.5	102	129.5	157	184.5	212	239.5	267	294.5	322	349.5	377	404.5
L2	64.5	92	119.5	147	174.5	202	229.5	257	284.5	312	339.5	367	394.5

L \ n	15	16	17	18	19	20
L1	432	459.5	487	514.5	542	569.5
L2	422	449.5	477	504.5	532	559.5

M-type plug connector (M)

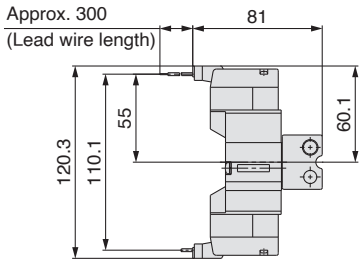

Unless otherwise indicated, dimensions are the same as Grommet (G).

DIN terminal (D) (Y)

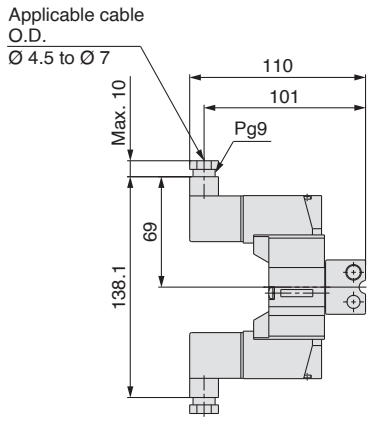

Unless otherwise indicated, dimensions are the same as Grommet (G).

Conduit terminal (T)

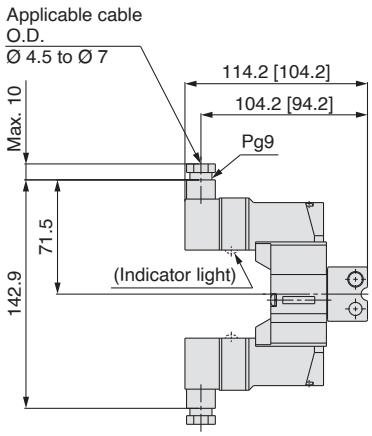

[ ]: Without indicator light
Unless otherwise indicated, dimensions are the same as Grommet (G).

Dimensions: Series VF3000

Type 30/VV5F3-30-□□1-□: Common exhaust
Grommet (G) (H)

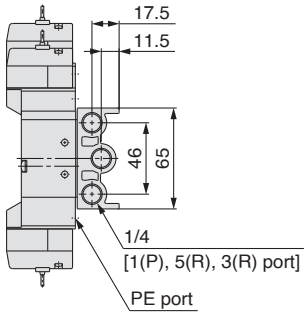

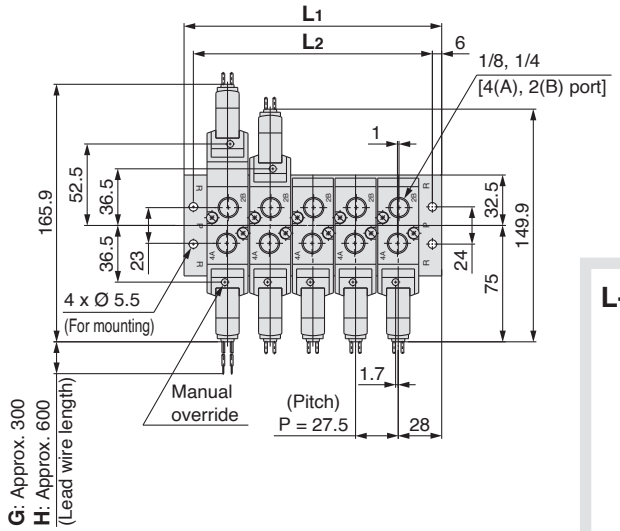

Grommet (G) (H)
DC without light/
surge voltage suppressor

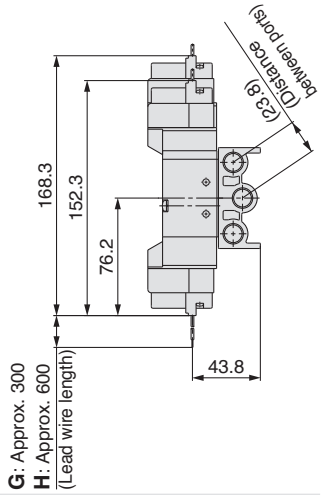

L-type plug connector (L)

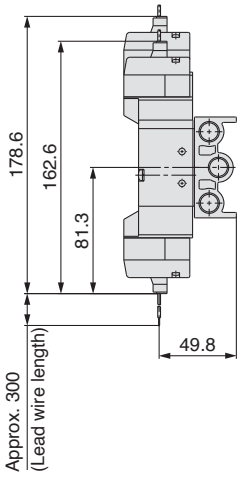

Unless otherwise indicated, dimensions are the same as Grommet (G).

L: Dimensions

n: Stations

L \ n	2	3	4	5	6	7	8	9	10	11	12	13	14
L1	83.5	111	138.5	166	193.5	221	248.5	276	303.5	331	358.5	386	413.5
L2	71.5	99	126.5	154	181.5	209	236.5	264	291.5	319	346.5	374	401.5

L \ n	15	16	17	18	19	20
L1	441	468.5	496	523.5	551	578.5
L2	429	456.5	484	511.5	539	566.5

M-type plug connector (M)

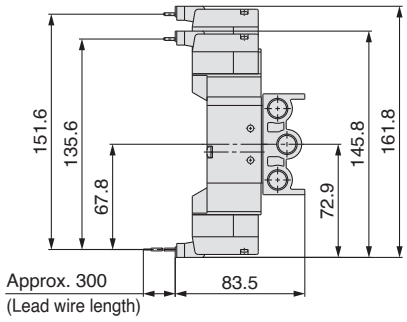

Unless otherwise indicated, dimensions are the same as Grommet (G).

DIN terminal (D) (Y)

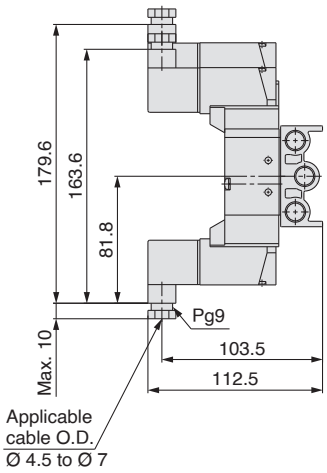

Unless otherwise indicated, dimensions are the same as Grommet (G).

Conduit terminal (T)

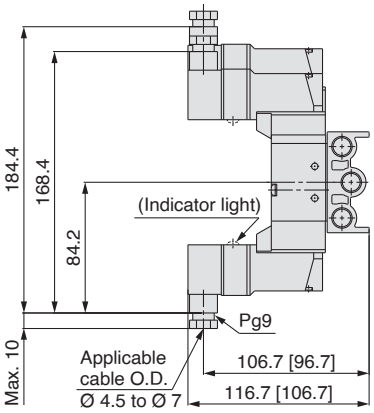

[ ]: Without indicator light
Unless otherwise indicated, dimensions are the same as Grommet (G).

Dimensions: Series VF3000

Type 30/VV5F3-30-□□1-□: When the individual EXH spacer (VF3000-75-1A) is mounted.

Grommet (G) (H)

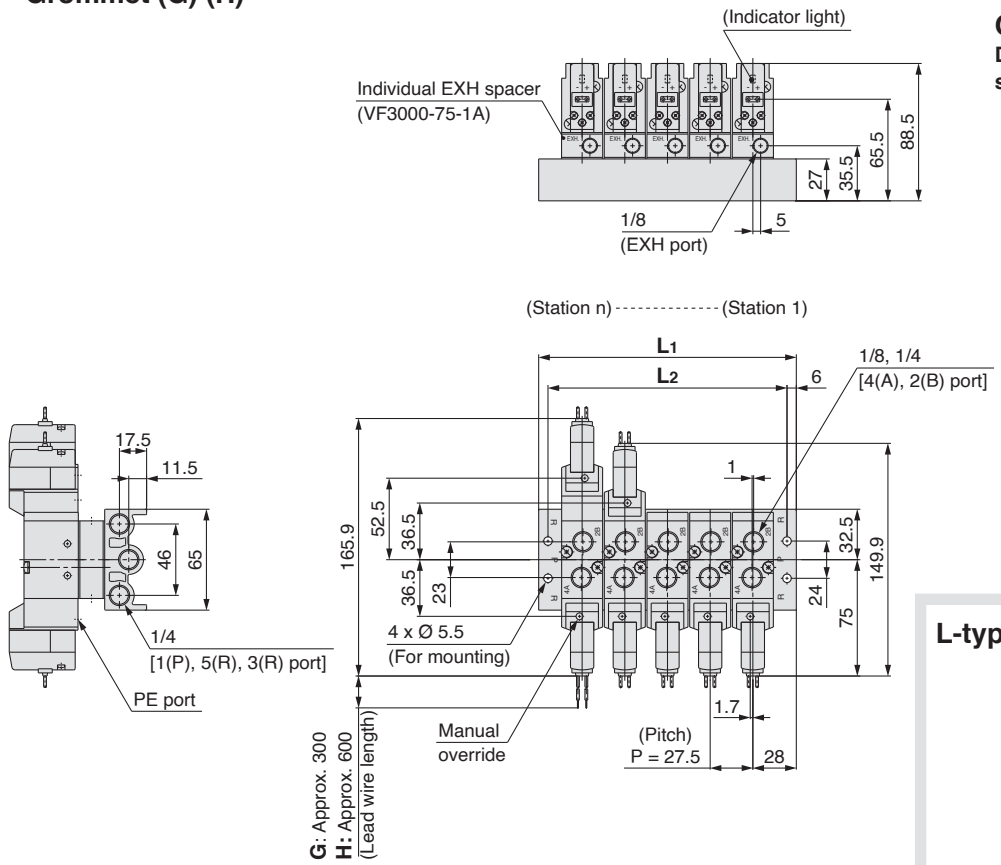

Grommet (G) (H)

**DC without light/
surge voltage suppressor**

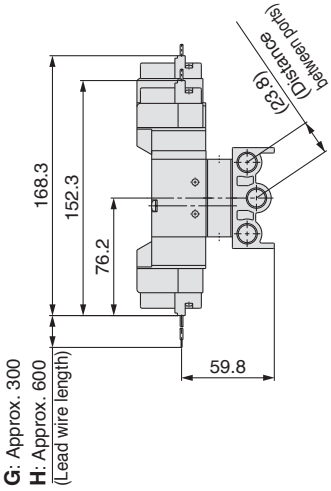

L: Dimensions

n: Stations

L \ n	2	3	4	5	6	7	8	9	10	11	12	13	14
L1	83.5	111	138.5	166	193.5	221	248.5	276	303.5	331	358.5	386	413.5
L2	71.5	99	126.5	154	181.5	209	236.5	264	291.5	319	346.5	374	401.5

L \ n	15	16	17	18	19	20
L1	441	468.5	496	523.5	551	578.5
L2	429	456.5	484	511.5	539	566.5

L-type plug connector (L)

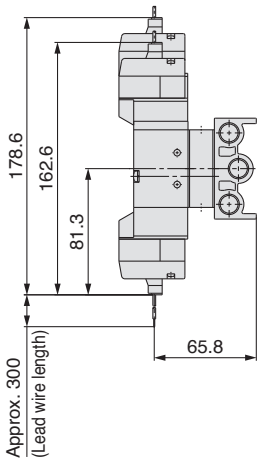

Unless otherwise indicated, dimensions are the same as Grommet (G).

M-type plug connector (M)

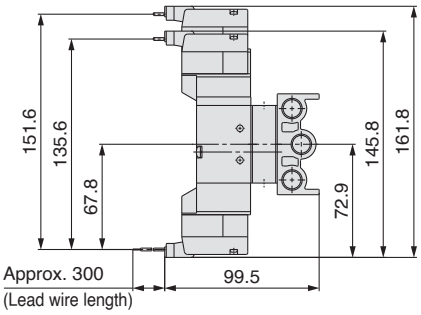

Unless otherwise indicated, dimensions are the same as Grommet (G).

DIN terminal (D) (Y)

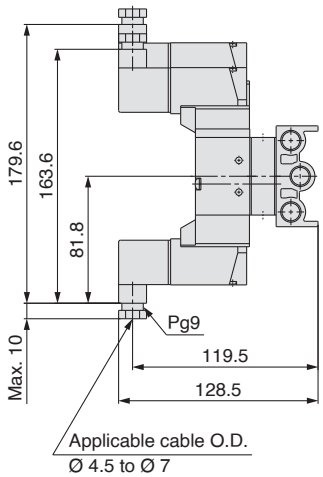

Unless otherwise indicated, dimensions are the same as Grommet (G).

Conduit terminal (T)

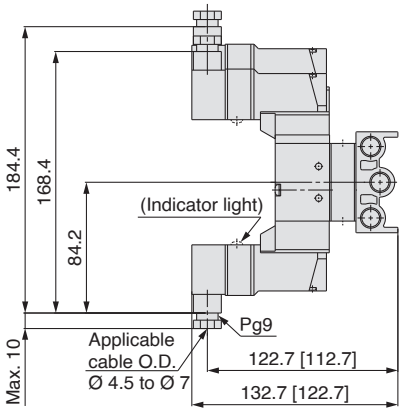

[ ]: Without indicator light
Unless otherwise indicated, dimensions are the same as Grommet (G).

Dimensions: Series VF5000

Type 20/VV5F5-20-□□1-□: Common exhaust
Grommet (G)

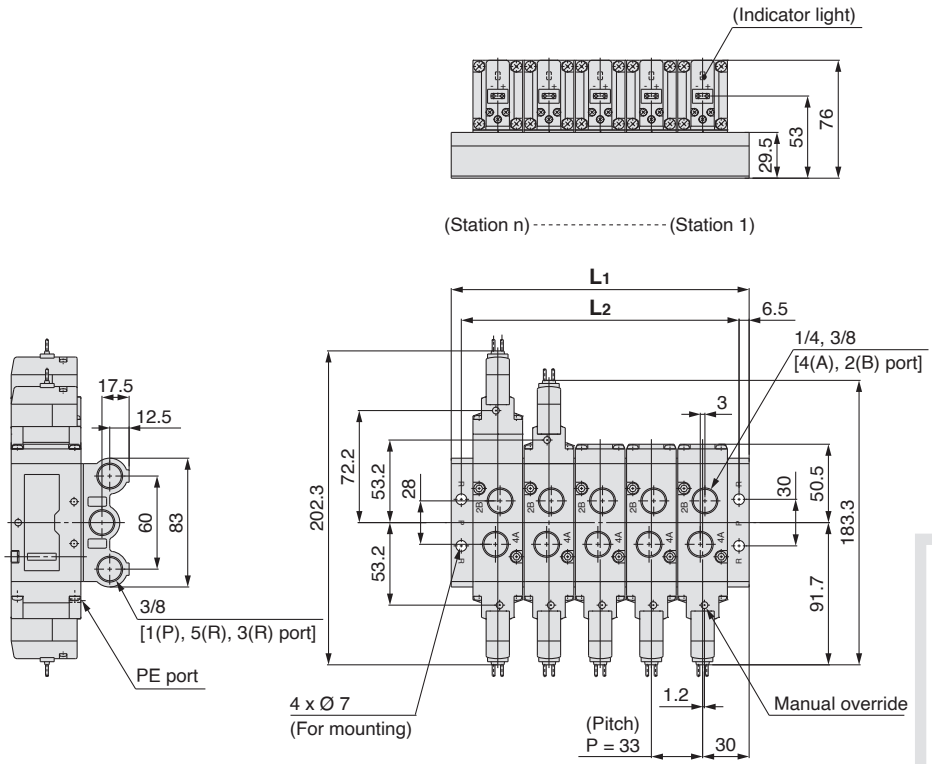

Grommet (G) (H)
DC without light/ surge voltage suppressor

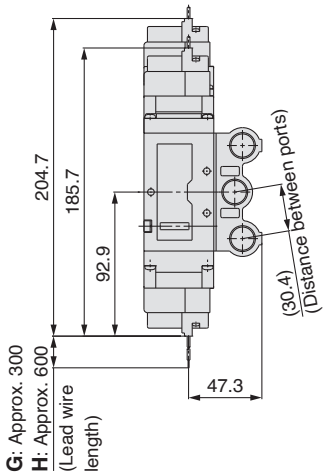

L-type plug connector (L)

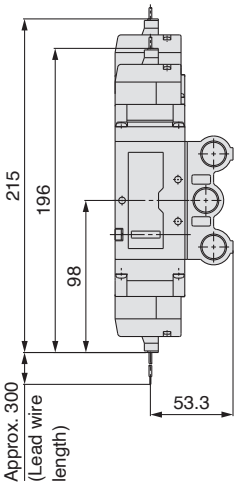

Unless otherwise indicated, dimensions are the same as Grommet (G).

L: Dimensions

n: Stations

L \ n	2	3	4	5	6	7	8	9	10
L1	93	126	159	192	225	258	291	324	357
L2	80	113	146	179	212	245	278	311	344

M-type plug connector (M)

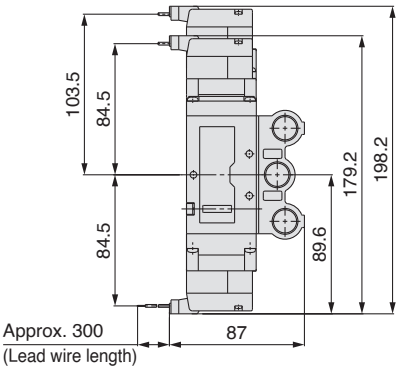

Unless otherwise indicated, dimensions are the same as Grommet (G).

DIN terminal (D) (Y)

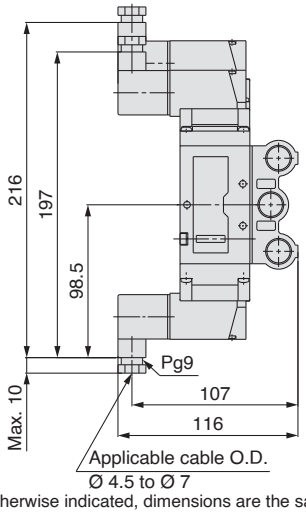

Unless otherwise indicated, dimensions are the same as Grommet (G).

Conduit terminal (T)

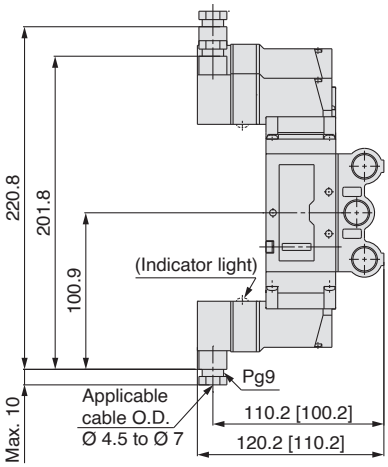

[ ]: Without indicator light
Unless otherwise indicated, dimensions are the same as Grommet (G).

Dimensions: Series VF5000

Type 20/VV5F5-20-□□1-□: When the individual EXH spacer (VF5000-75-1A) is mounted.

Grommet (G)

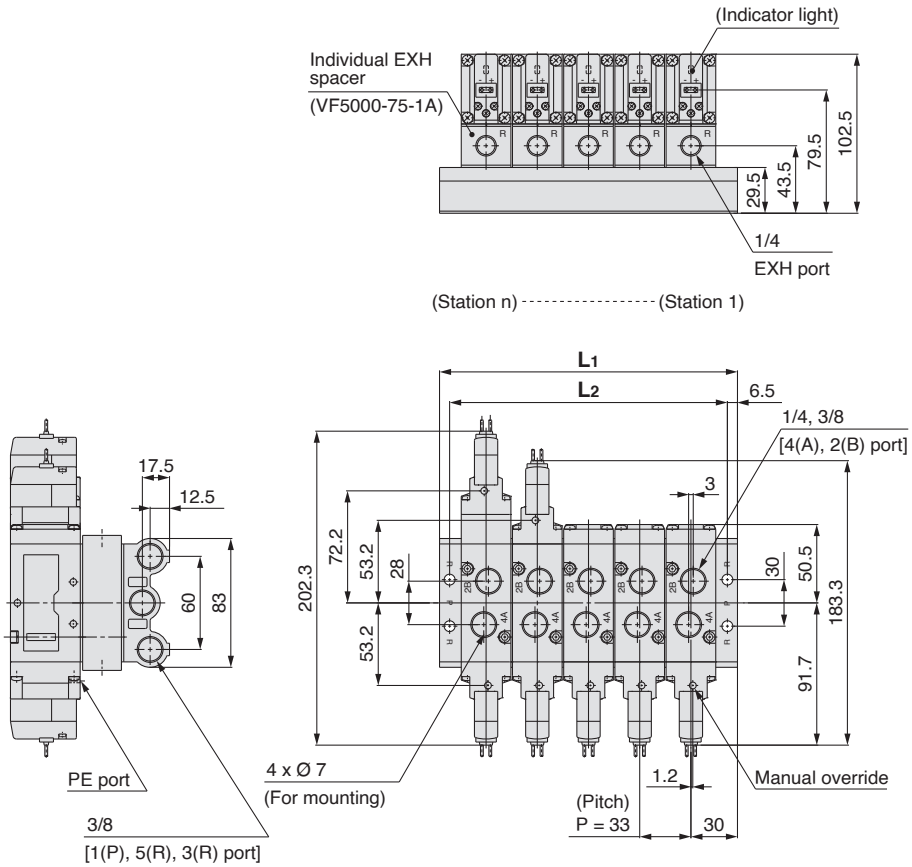

Grommet (G) (H)

DC without light/ surge voltage suppressor

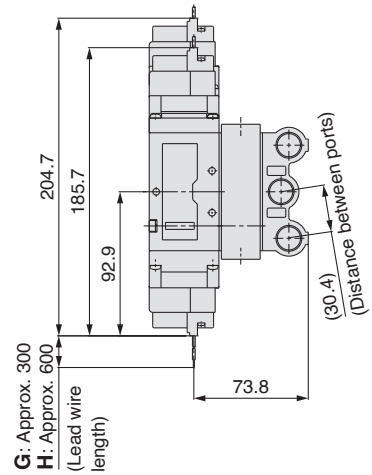

L-type plug connector (L)

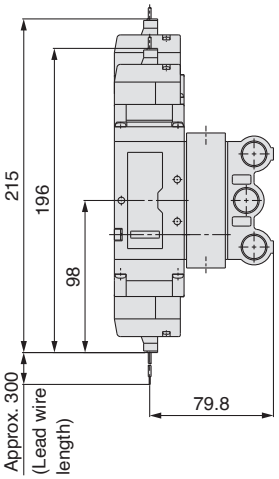

Unless otherwise indicated, dimensions are the same as Grommet (G).

L: Dimensions

n: Stations

L \ n	2	3	4	5	6	7	8	9	10
L_1	93	126	159	192	225	258	291	324	357
L_2	80	113	146	179	212	245	278	311	344

M-type plug connector (M)

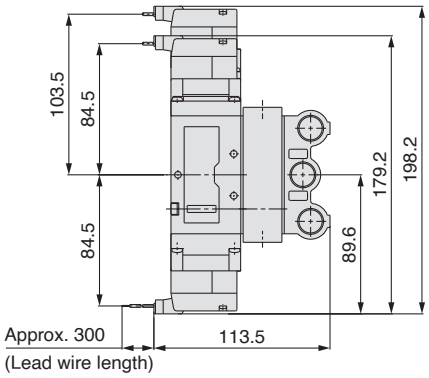

Unless otherwise indicated, dimensions are the same as Grommet (G).

DIN terminal (D) (Y)

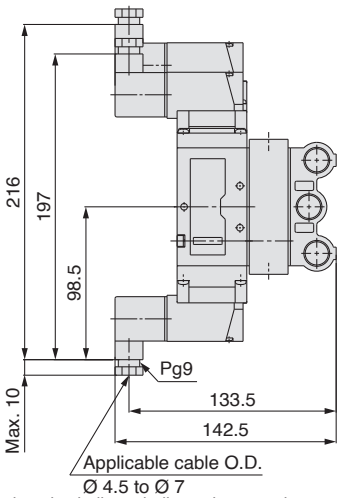

Unless otherwise indicated, dimensions are the same as Grommet (G).

Conduit terminal (T)

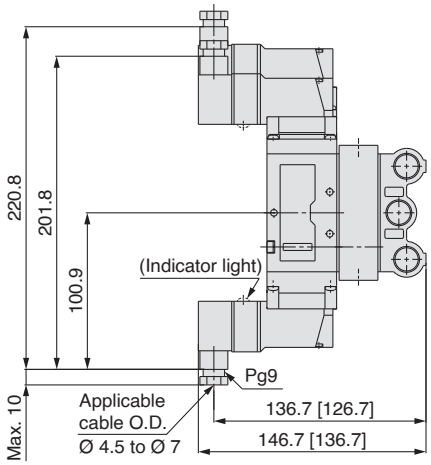

[ ]: Without indicator light
Unless otherwise indicated, dimensions are the same as Grommet (G).

Dimensions: Series VF5000

Type 21/VV5F5-21-□□1-□: Common exhaust
Grommet (G)

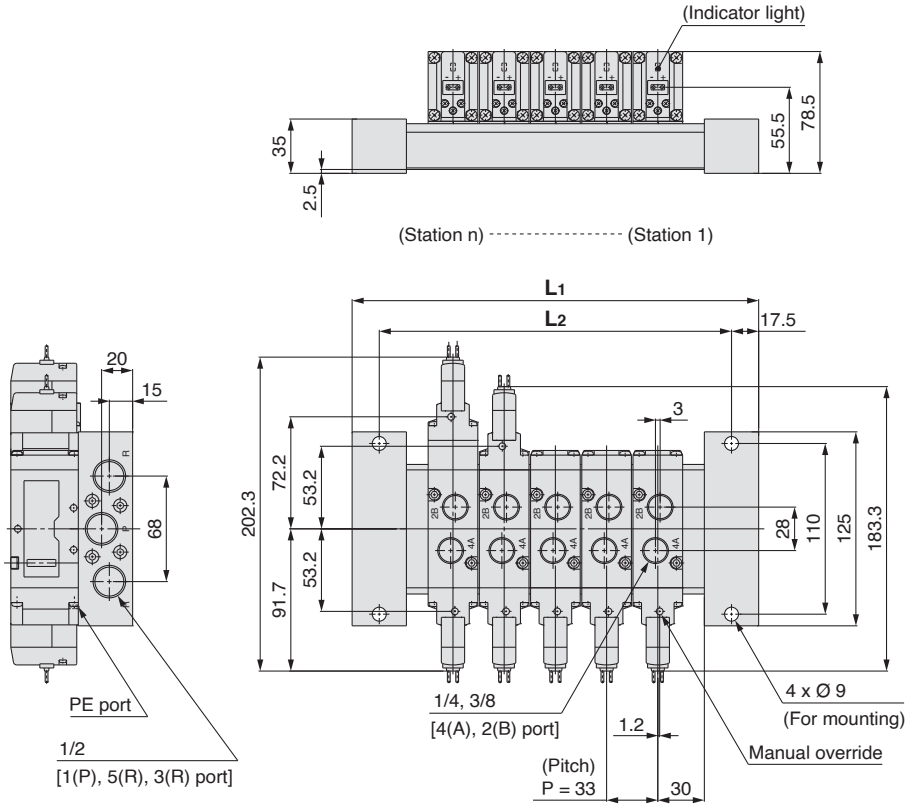

Grommet (G) (H)
DC without light/ surge voltage suppressor

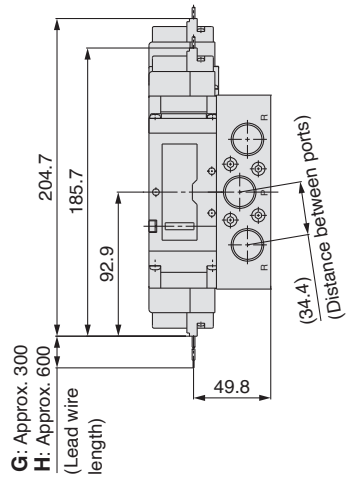

L-type plug connector (L)

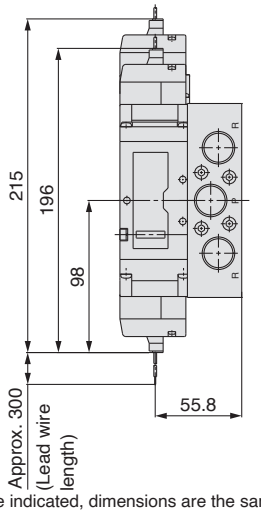

Unless otherwise indicated, dimensions are the same as Grommet (G).

L: Dimensions

n: Stations

L \ n	2	3	4	5	6	7	8	9	10	11	12	13	14	15
L_1	163	196	229	262	295	328	361	394	427	460	493	526	559	592
L_2	128	161	194	227	260	293	326	359	392	425	458	491	524	557

M-type plug connector (M)

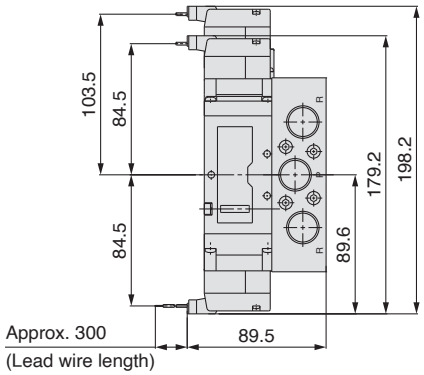

Unless otherwise indicated, dimensions are the same as Grommet (G).

DIN terminal (D) (Y)

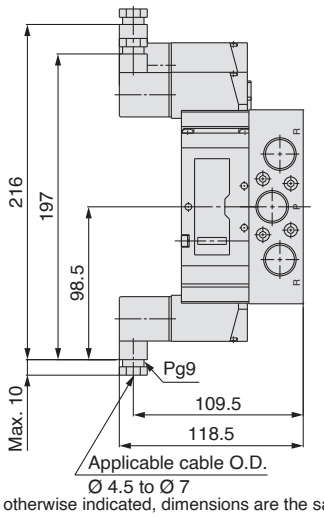

Unless otherwise indicated, dimensions are the same as Grommet (G).

Conduit terminal (T)

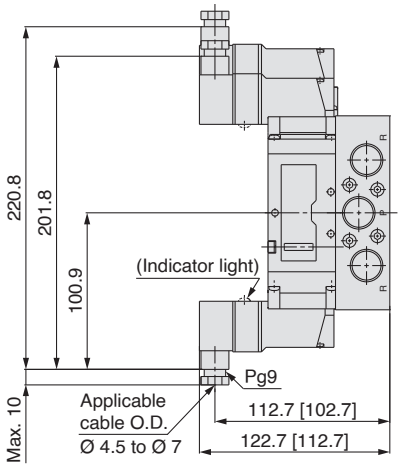

[ ]: Without indicator light
Unless otherwise indicated, dimensions are the same as Grommet (G).

Dimensions: Series VF5000

Type 21/VV5F5-21-□□1-□: When the individual EXH spacer (VF5000-75-1A) is mounted.

Grommet (G)

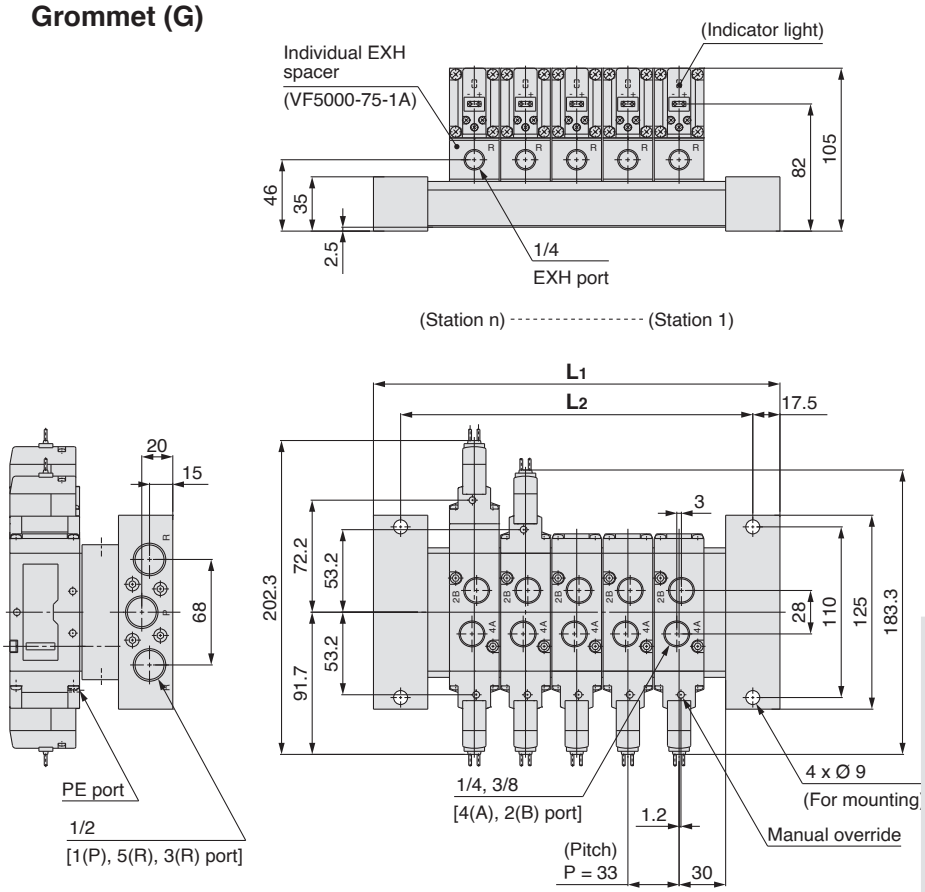

Grommet (G) (H)

DC without light/ surge voltage suppressor

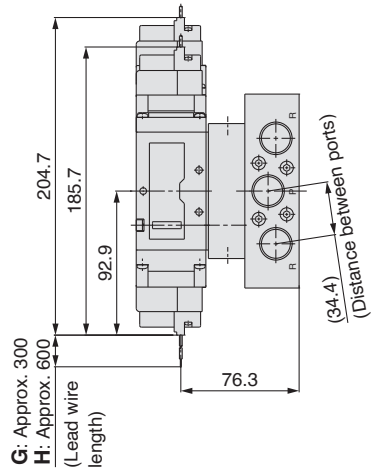

L-type plug connector (L)

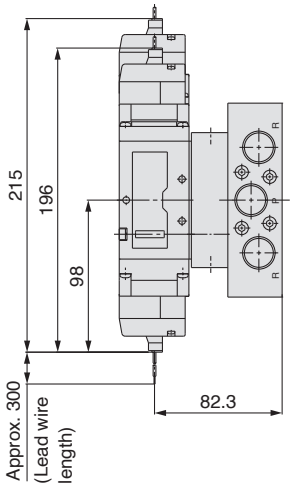

Unless otherwise indicated, dimensions are the same as Grommet (G).

L: Dimensions

n: Stations

L \ n	2	3	4	5	6	7	8	9	10	11	12	13	14	15
L1	163	196	229	262	295	328	361	394	427	460	493	526	559	592
L2	128	161	194	227	260	293	326	359	392	425	458	491	524	557

M-type plug connector (M)

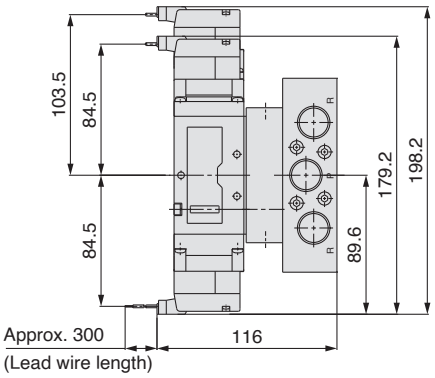

Unless otherwise indicated, dimensions are the same as Grommet (G).

DIN terminal (D) (Y)

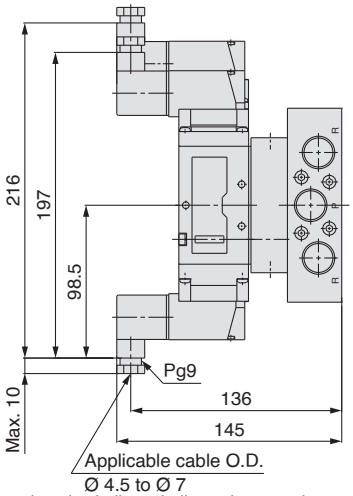

Unless otherwise indicated, dimensions are the same as Grommet (G).

Conduit terminal (T)

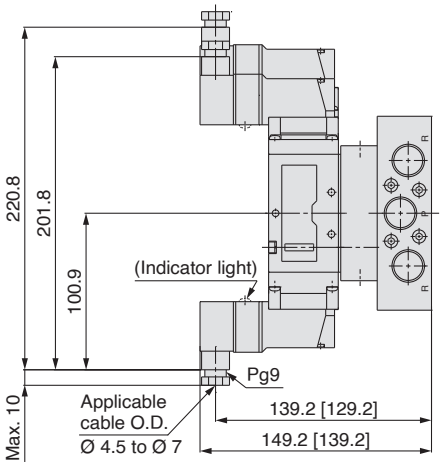

[ ]: Without indicator light
Unless otherwise indicated, dimensions are the same as Grommet (G).

Base Mounted

Pilot Operated 5 Port Solenoid Valve
VF3000/5000 Series
Manifold

Note) Only DIN and conduit terminal types are available with AC mode.
Refer to the electrical entry for details.

Note) Pressure specifications: 0.7 MPa, DC or 24 VAC only

∗ See the table below.

How to Order Manifold

Common exhaust **VV5F 3 – 40 – 05 2 – 02 F**

Series

Symbol	Series	P, R port size	A, B port size
3	VF3000	1/4	1/4
5	VF5000	3/8	1/4

∗ The A and B ports are made on the bottom.

Stations

02	2 stations
⋮	⋮
20	20 stations

∗ Up to 10 stations for VV5F5.

Thread type

—	Rc
F	G
N	NPT
T	NPTF

How to Order Valve (With a gasket and two mounting screws)

∗ **For low wattage specification, refer to "How to Order Valve" on page 26.**

VF 3 1 4 0 ☐ ☐ – 5 G ☐ ☐ 1 – ☐

Series

3	VF3000
5	VF5000

∗ Not available with the VF1000.

Type of actuation

1	2-position single
2	2-position double
3	3-position closed center
4	3-position exhaust center
5	3-position pressure center

Body model

Body option

0: Pilot valve individual exhaust

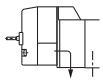

PE port EA/EB port

VF3000	VF5000
○	—

3: Main/Pilot valve common exhaust

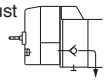

PE port EA/EB port

VF3000	VF5000
○	—

4: Pilot valve base exhaust

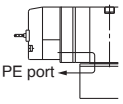

PE port

VF3000	VF5000
—	○

Pressure specifications

		UL-compliant
—	Standard (0.7 MPa)	
K	High-pressure type (1 MPa)	—

Rated voltage

DC		UL-compliant
5	24 VDC	•
6	12 VDC	•

AC (50/60 Hz) Note)		UL-compliant
1	100 VAC	—
2	200 VAC	—
3	110 VAC [115 VAC]	—
4	220 VAC [230 VAC]	—
7	240 VAC	—
B	24 VAC	•

Note) For triac output, refer to the made-to-order specifications (X600).

Coil specifications

—	Standard
T	With power saving circuit (DC only)

Note) Be sure to select the power saving circuit type when it is continuously energized for long periods of time.
(Refer to page 51 for details.)

∗ T type is available with DC mode only. When T is selected, only Z type of light/surge voltage suppressor is available. (Note that when the electrical entry of DIN terminal type without connector is selected, only DOS and YOS are available.)

Made to Order
Made-to-order specifications are not compliant with UL standards.

Manual override

—: Non-locking push type	D: Push-turn locking slotted type	E: Push-turn locking lever type

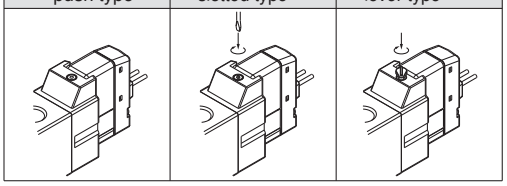

Light/Surge voltage suppressor

Symbol	Light/Surge voltage suppressor	DC	AC
—	Without light/surge voltage suppressor	○	○
S	With surge voltage suppressor	○	— Note)
Z	With light/surge voltage suppressor	○	○
R	With surge voltage suppressor (Non-polar)	○	—
U	With light/surge voltage suppressor (Non-polar)	○	—

Note) S type is not available with AC mode, since a rectifier prevents surge voltage generation.

∗ In the DIN terminal type, since a light is installed in the connector, DOZ, DOU, YOZ, YOU are not available.

⚠ Caution

When using the surge voltage suppressor type, residual voltage will remain. Refer to page 51 for details.

Electrical entry

Grommet		L-type plug connector		M-type plug connector		DIN terminal [IP65 compatible]	DIN (EN175301-803) terminal [IP65 compatible]	Conduit terminal [IP65 compatible]
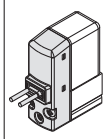	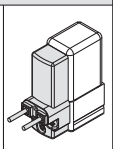	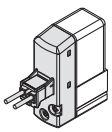	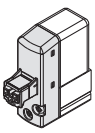	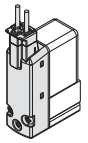	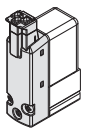	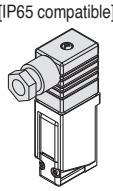	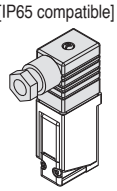	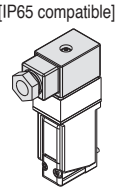
G: Lead wire length 300 mm **H**: Lead wire length 600 mm	**G**: Lead wire length 300 mm **H**: Lead wire length 600 mm DC Without light/surge voltage suppressor	**L**: With lead wire (length 300 mm)	**LN**: Without lead wire	**M**: With lead wire (length 300 mm)	**MN**: Without lead wire	**D**: With connector	**Y**: With connector	**T**: Conduit terminal
		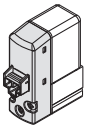		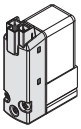		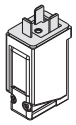	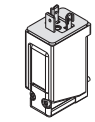	
		LO: Without connector		**MO**: Without connector		**DO**: Without connector	**YO**: Without connector	
CE/UKCA compliant DC		CE UKCA		CE UKCA		CE UKCA	CE UKCA	CE UKCA
CE/UKCA compliant AC Note 2)		—		—		CE UKCA	CE UKCA	CE UKCA

∗ LN and MN types are with 2 sockets. ∗ Refer to page 49 when different length of lead wire for L/M-type plug connector is required.
∗ Refer to page 50 for details on the DIN (EN175301-803) terminal.
Note 1) When using IP65, select the main/pilot valve common exhaust or pilot valve base exhaust type.
Note 2) With the same specifications as the DC type, all electrical entries for the 24 VAC type are CE/UKCA marking compliant.

Manifold Specifications

Series	Manifold base model	EXH port type	Applicable valve model	Applicable stations	Manifold base Weight: W [g] Stations: n
VF3000	**VV5F3-40** 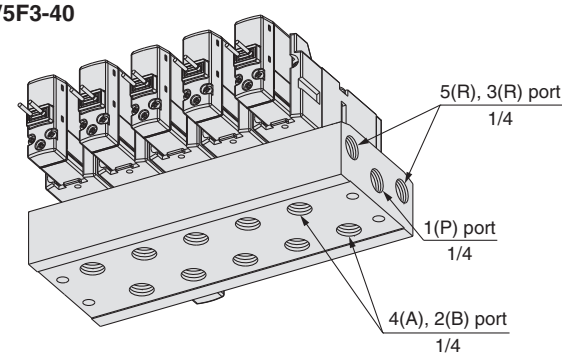	Common EXH	**VF3□40** **VF3□43**	2 to 20 stations	W = 110n + 116
VF5000	**VV5F5-40** 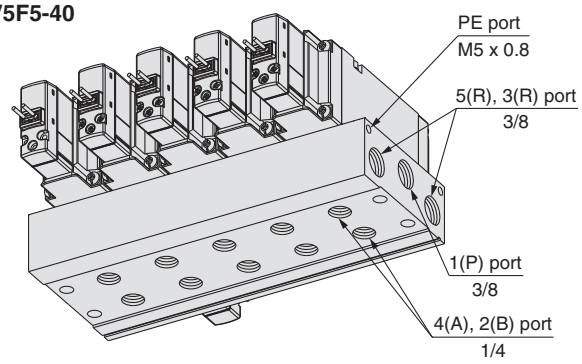	Common EXH	**VF5□44**	2 to 10 stations	W = 161n + 128

Note) Supply pressure to 1(P) ports and exhaust pressure from R ports on both sides for 10 stations or more (5 stations or more for the VF5000).

How to Order Manifold Assembly

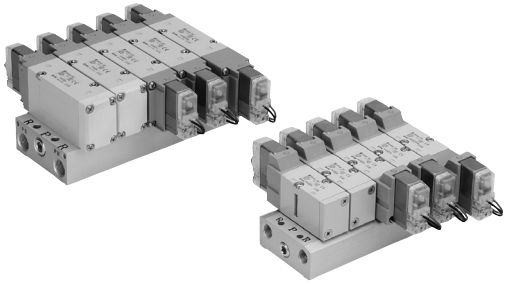

Example (VV5F3-40)

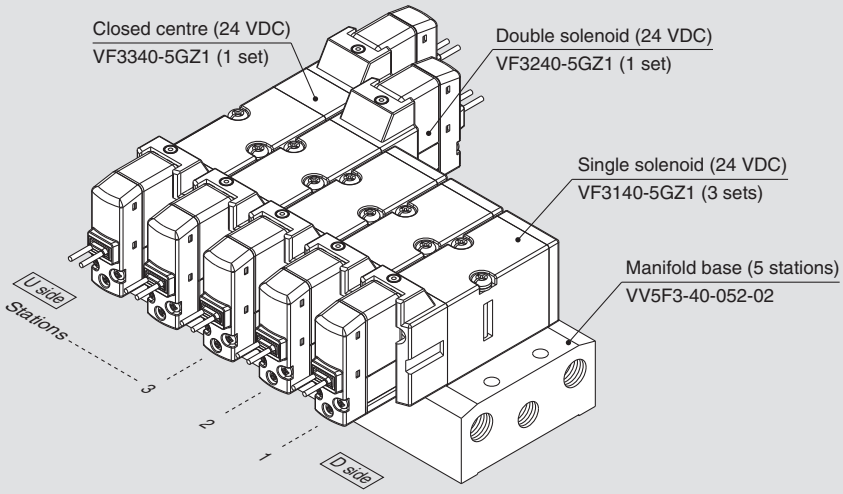

VV5F3-40-052-02 ····· 1 set (Type 40, 5-station manifold base part no.)
*** VF3140-5GZ1 ····· 3 sets (Single solenoid part no.)**
*** VF3240-5GZ1 ····· 1 set (Double solenoid part no.)**
*** VF3340-5GZ1 ····· 1 set (Closed centre part no.)**
The asterisk denotes the symbol for assembly. Prefix it to the part nos. of the solenoid valve, etc.

- The valve arrangement is numbered as the 1st station from D side.
- Under the manifold base part number, state the valves to be mounted in order from the 1st station as shown in the figure above. If the arrangement becomes complicated, specify on the manifold specification sheet.

Manifold Options

■ For base mounted Blanking plate assembly

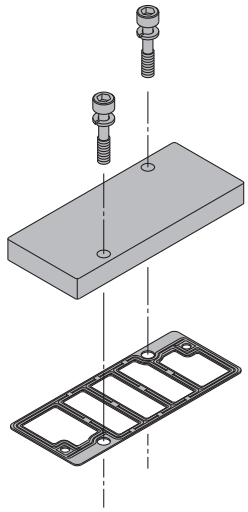

Series	Blanking plate assembly part no.
VF3000	DXT031-38-5A
VF5000	VF5000-70-2A

■ Individual EXH spacer assembly

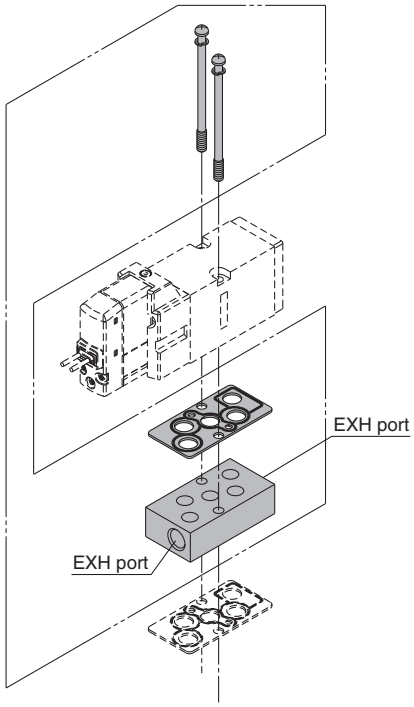

■ Mounting screw, gasket part no.

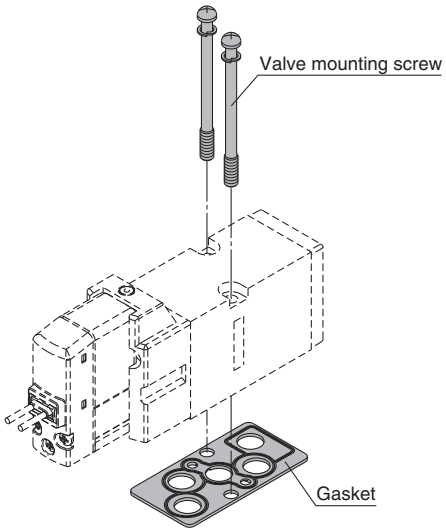

Series	Valve mounting screw (1 pc.)	Gasket
VF3000	Round head combination screw DXT031-44-1 (M4 x 39.5, With spring washer)	DXT031-30-11
VF5000	Hexagon socket head cap screw AXT620-32-1 (M4 x 48, With spring washer)	DXT156-9-8

⚠ Caution

Tightening Torque for Mounting Screw

M4: 1.4 N·m

⚠ Warning

When mounting a valve or spacer on the manifold base or sub-plate, etc., the mounting orientation is already decided. If mounted in a wrong direction, the equipment to be connected may result in a malfunction. Refer to the dimensions for mounting.

VF 3 000−75−2 □ A

•Series

Symbol	Series	Port size
3	VF3000	1/8
5	VF5000	1/4

•Thread type

—	Rc
F	G
N	NPT
T	NPTF

Dimensions: Series VF3000

Type 40/VV5F3-40-□□2-02□: Common exhaust

Grommet (G) (H)

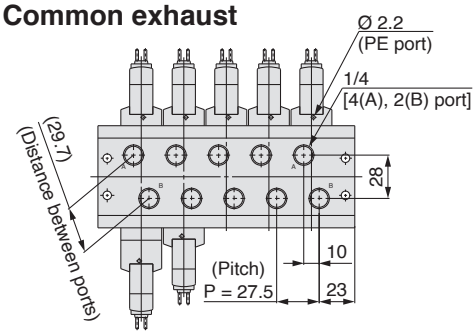

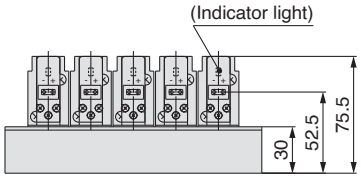

Grommet (G) (H)

DC without light/ surge voltage suppressor

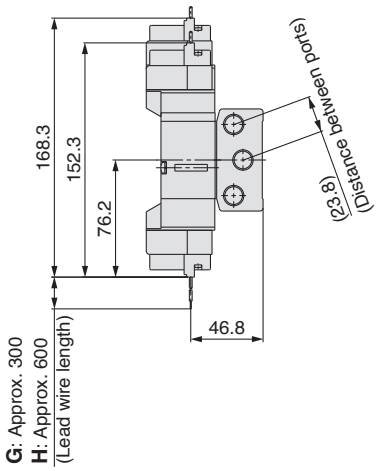

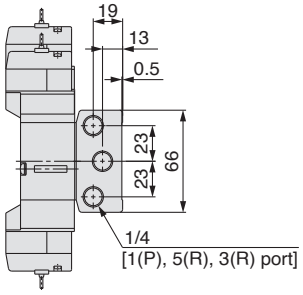

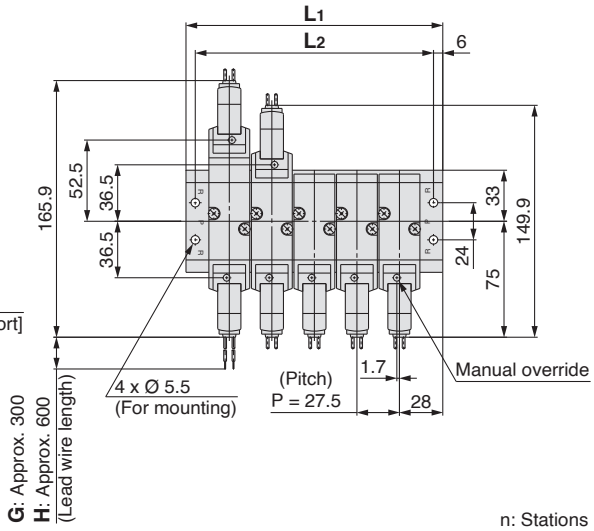

L: Dimensions

n: Stations

L \ n	2	3	4	5	6	7	8	9	10	11	12	13	14
L_1	83.5	111	138.5	166	193.5	221	248.5	276	303.5	331	358.5	386	413.5
L_2	71.5	99	126.5	154	181.5	209	236.5	264	291.5	319	346.5	374	401.5

L \ n	15	16	17	18	19	20
L_1	441	468.5	496	523.5	551	578.5
L_2	429	456.5	484	511.5	539	566.5

L-type plug connector (L)

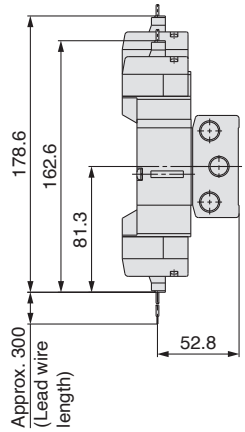

Unless otherwise indicated, dimensions are the same as Grommet (G).

M-type plug connector (M)

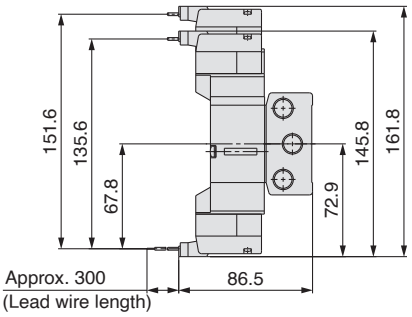

Unless otherwise indicated, dimensions are the same as Grommet (G).

DIN terminal (D) (Y)

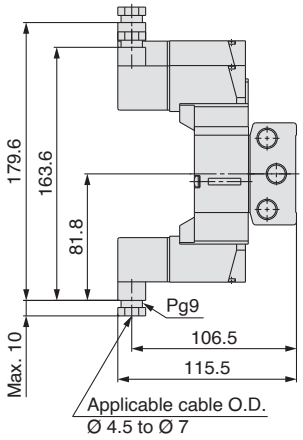

Unless otherwise indicated, dimensions are the same as Grommet (G).

Conduit terminal (T)

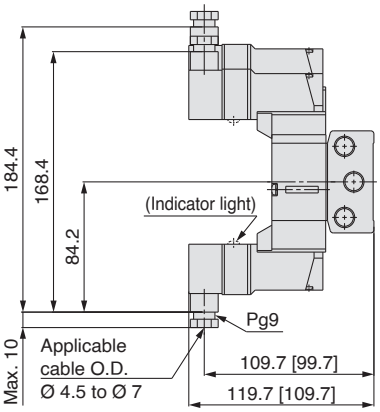

[ ]: Without indicator light
Unless otherwise indicated, dimensions are the same as Grommet (G).

Dimensions: Series VF3000

Type 40/VV5F3-40-□□2-02□: When the individual EXH spacer (VF3000-75-2A) is mounted.

Grommet (G) (H)

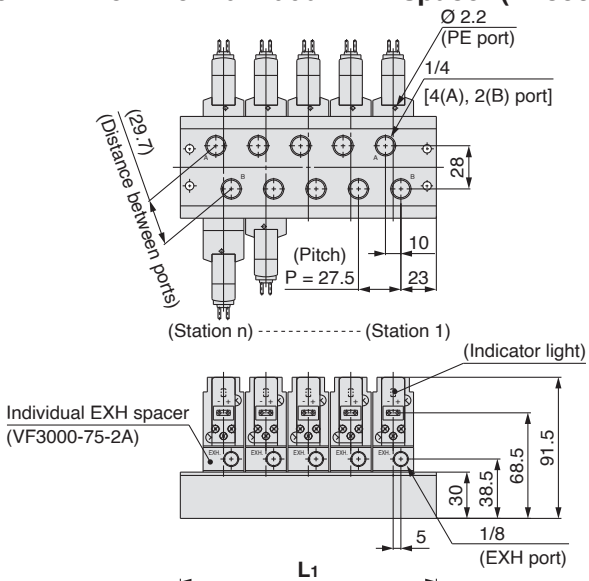

Grommet (G) (H)
DC without light/ surge voltage suppressor

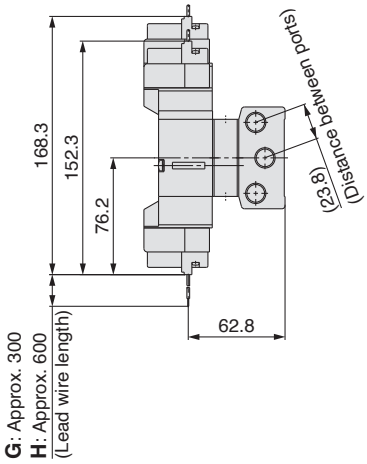

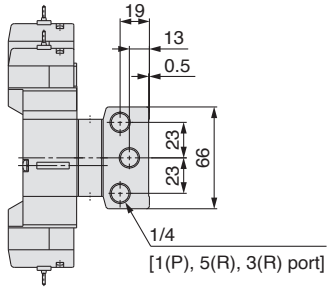

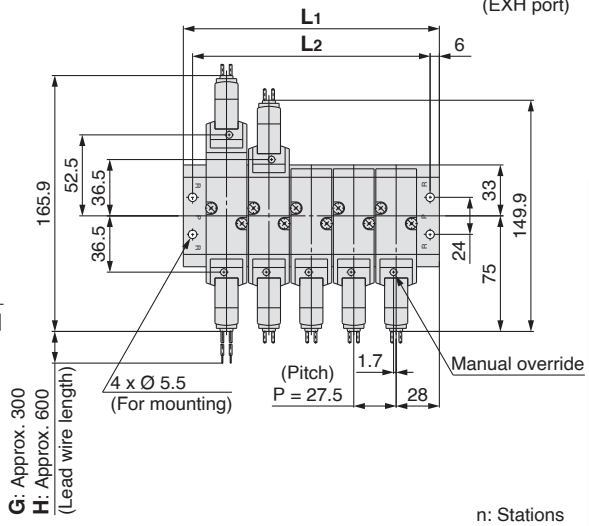

L: Dimensions

n: Stations

L \ n	2	3	4	5	6	7	8	9	10	11	12	13	14
L_1	83.5	111	138.5	166	193.5	221	248.5	276	303.5	331	358.5	386	413.5
L_2	71.5	99	126.5	154	181.5	209	236.5	264	291.5	319	346.5	374	401.5

L \ n	15	16	17	18	19	20
L_1	441	468.5	496	523.5	551	578.5
L_2	429	456.5	484	511.5	539	566.5

L-type plug connector (L)

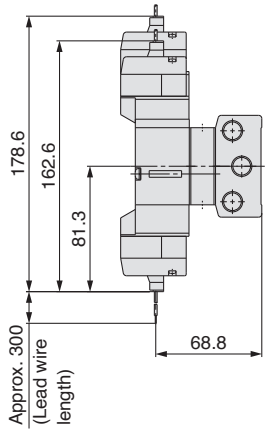

Unless otherwise indicated, dimensions are the same as Grommet (G).

M-type plug connector (M)

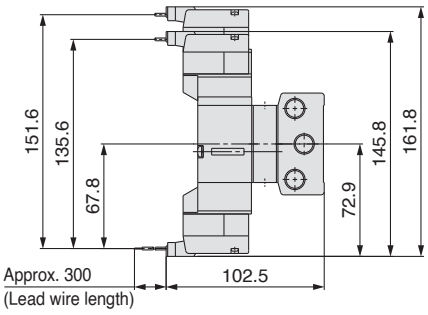

Unless otherwise indicated, dimensions are the same as Grommet (G).

DIN terminal (D) (Y)

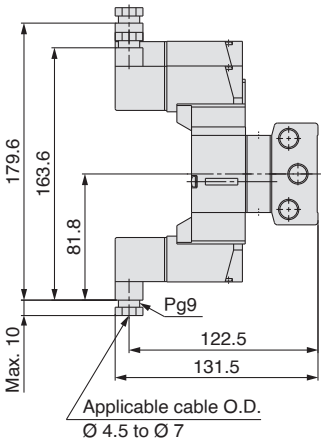

Unless otherwise indicated, dimensions are the same as Grommet (G).

Conduit terminal (T)

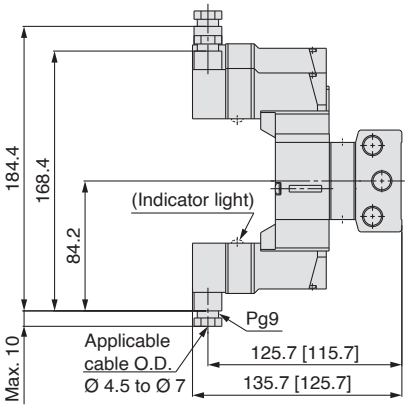

[ ]: Without indicator light
Unless otherwise indicated, dimensions are the same as Grommet (G).

Dimensions: Series VF5000

Type 40/VV5F5-40-□□2-02□: Common exhaust

Grommet (G)

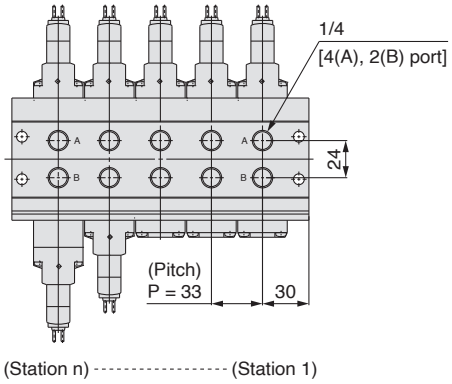

Grommet (G) (H)

DC without light/ surge voltage suppressor

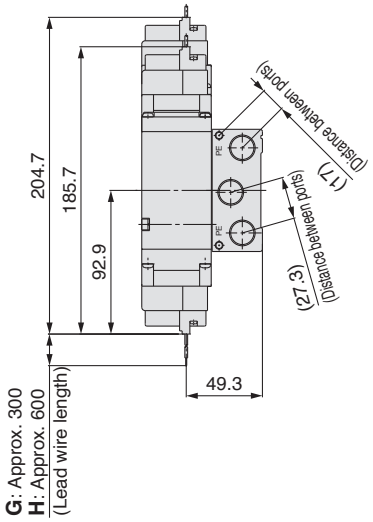

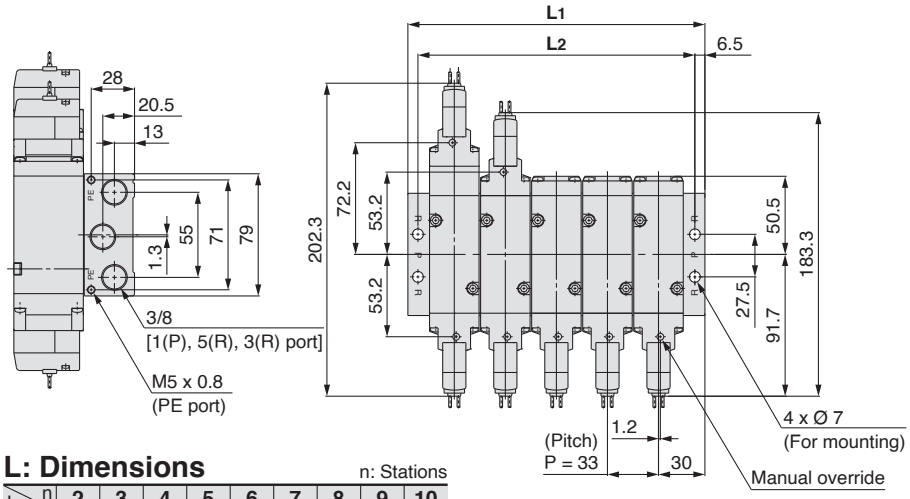

L: Dimensions

n: Stations

L \ n	2	3	4	5	6	7	8	9	10
L_1	93	126	159	192	225	258	291	324	357
L_2	80	113	146	179	212	245	278	311	344

L-type plug connector (L)

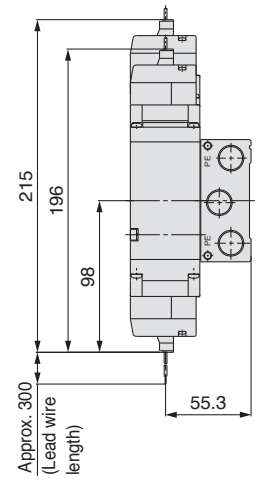

Unless otherwise indicated, dimensions are the same as Grommet (G).

M-type plug connector (M)

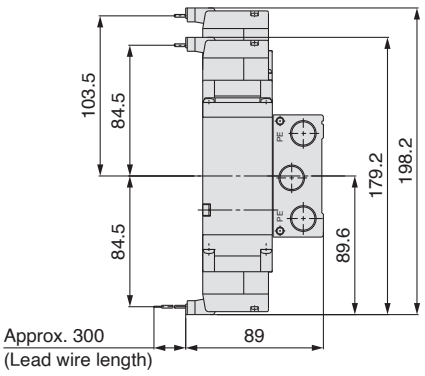

Unless otherwise indicated, dimensions are the same as Grommet (G).

DIN terminal (D) (Y)

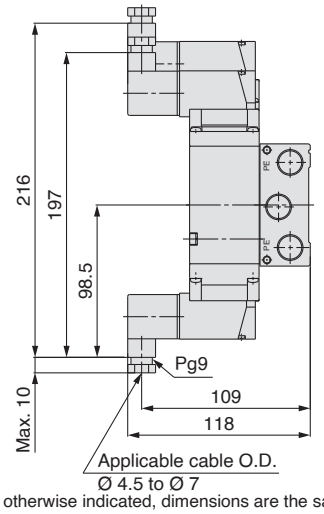

Unless otherwise indicated, dimensions are the same as Grommet (G).

Conduit terminal (T)

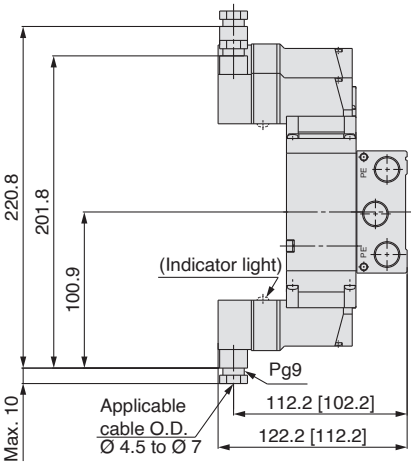

[ ]: Without indicator light
Unless otherwise indicated, dimensions are the same as Grommet (G).

Dimensions: Series VF5000

Type 40/VV5F5-40-□□2-02□: When the individual EXH spacer (VF5000-75-2A) is mounted.

Grommet (G)

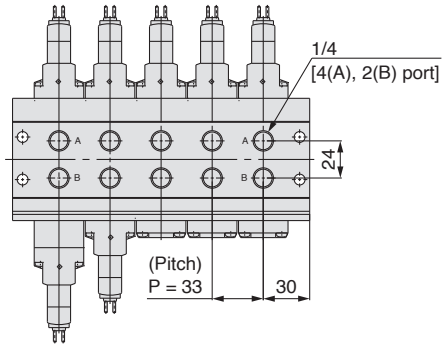

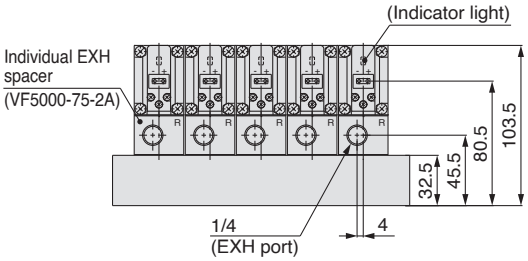

Grommet (G) (H)

DC without light/ surge voltage suppressor

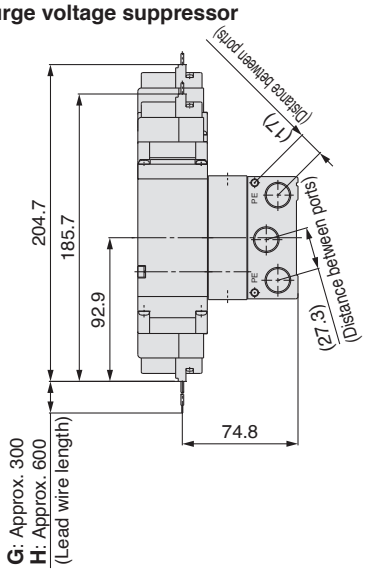

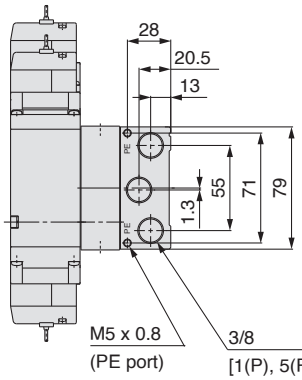

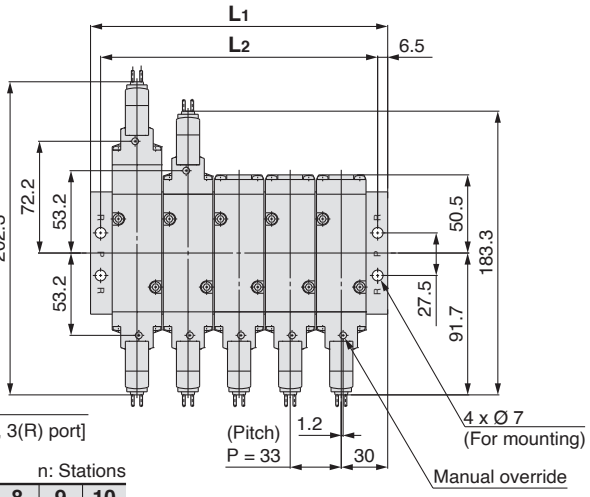

L-type plug connector (L)

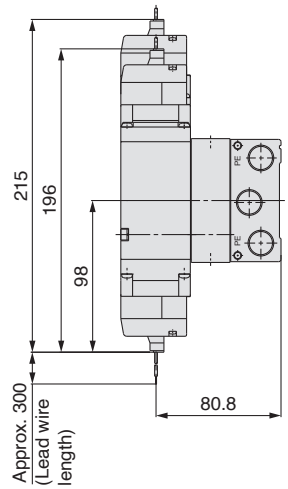

Unless otherwise indicated, dimensions are the same as Grommet (G).

L: Dimensions

n: Stations

L \ n	2	3	4	5	6	7	8	9	10
L_1	93	126	159	192	225	258	291	324	357
L_2	80	113	146	179	212	245	278	311	344

M-type plug connector (M)

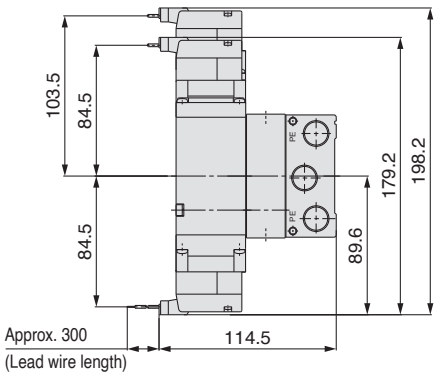

Unless otherwise indicated, dimensions are the same as Grommet (G).

DIN terminal (D) (Y)

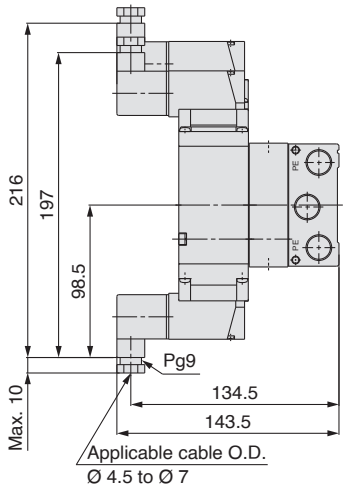

Unless otherwise indicated, dimensions are the same as Grommet (G).

Conduit terminal (T)

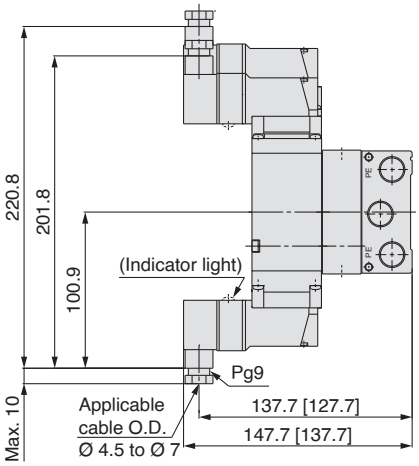

[ ]: Without indicator light
Unless otherwise indicated, dimensions are the same as Grommet (G).

Specific Product Precautions 1

Be sure to read this before handling the products. For safety instructions and 3/4/5-port solenoid valve precautions, refer to the "Handling Precautions for SMC Products" and the "Operation Manual" on the SMC website: https://www.smc.eu

Manual Override

⚠ Warning

Manual override is used to switch the main valve without inputting an electrical signal for the valve. Connected actuator is started by manual operation. Use the manual override after confirming that there is no danger.

■ Non-locking push type

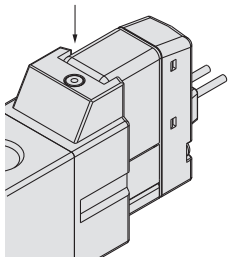

Push down on the manual override with a small screwdriver until it stops. Release the screwdriver and the manual override will return.

■ Push-turn locking slotted type

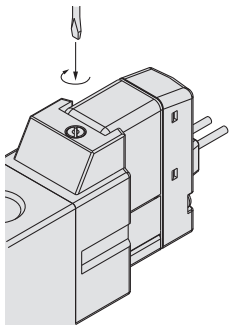

Locked position

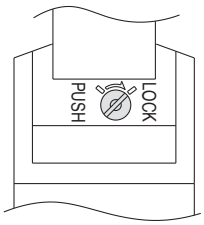

Push down on the manual override with a small flat head screwdriver until it stops. Turn it clockwise by 90° to lock it. Turn it counterclockwise to release it.

■ Push-turn locking lever type

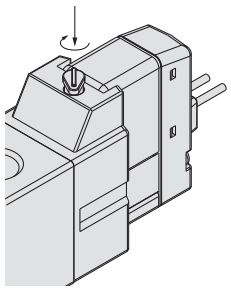

Locked position

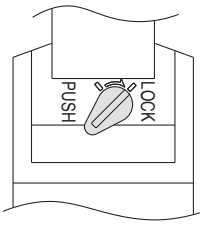

After pushing down, turn in the direction of the arrow. If it is not turned, it can be operated the same way as the non-locking push type.

⚠ Caution

When locking the manual override on the push-turn locking type (D or E type), be sure to push it down before turning.
Turning without first pushing it down can cause damage to the manual override and other trouble such as air leakage, etc.
Do not apply excessive torque when turning the locking type manual override. (0.1 N·m)

How to Use L/M-Type Plug Connector

⚠ Caution

1. Connector attachment/detachment

- To attach a connector, hold the lever and connector unit between your fingers and insert straight onto the pins of the solenoid valve so that the lever's pawl is pushed into the groove and locks.
- To detach a connector, remove the pawl from the groove by pushing the lever downward with your thumb, and pull the connector straight out.

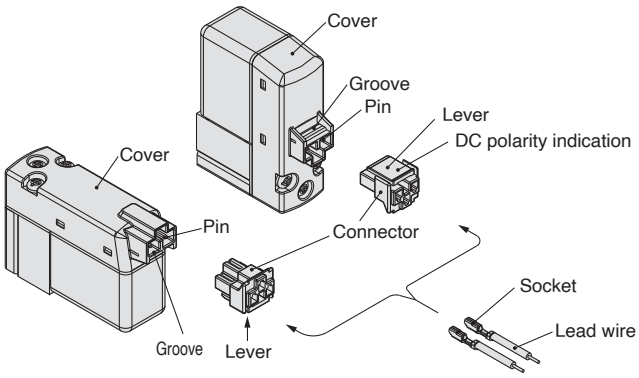

2. Crimping lead wire and socket connection

Not necessary if ordering the lead wire pre-connected model. Strip 3.2 to 3.7 mm at the end of the lead wires, insert the ends of the core wires evenly into the sockets, and then crimp with a crimping tool. When this is done, take care that the coverings of the lead wires do not enter the core wire crimping area. (Please contact SMC for details on the crimping tool.)

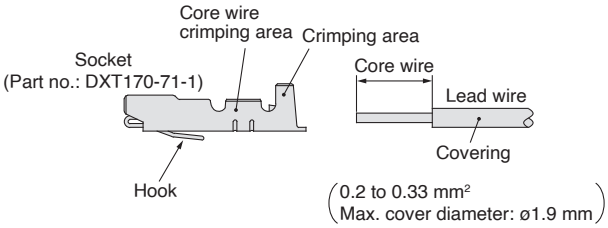

3. Socket with lead wire attachment/detachment

- **Attachment**
  Insert the sockets into the square holes of the connector (with +, – indication), and continue to push the sockets all the way in until they lock by hooking into the seats in the connector. (When they are pushed in, their hooks open and they are locked automatically.) Then, confirm that they are locked by pulling lightly on the lead wires.
- **Detachment**
  To detach a socket from a connector, pull out the lead wire while pressing the socket's hook with a stick having a thin tip (approx. 1 mm). If the socket will be used again, first spread the hook outward.

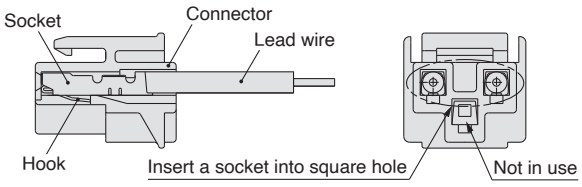

Specific Product Precautions 2

Be sure to read this before handling the products. For safety instructions and 3/4/5-port solenoid valve precautions, refer to the "Handling Precautions for SMC Products" and the "Operation Manual" on the SMC website: https://www.smc.eu

Plug Connector Lead Wire Length

⚠Caution

Plug connector lead wires have a standard length of 300 mm, however, the following lengths are also available.

How to Order Connector Assembly

DC : V200-30-4A-□

100 VAC : V200-30-1A-□

200 VAC : V200-30-2A-□

Other AC voltages : V200-30-3A-□

Without lead wire : V200-30-A
(With a connector and 2 sockets)

Lead wire length

–	300 mm
6	600 mm
10	1000 mm
15	1500 mm
20	2000 mm
25	2500 mm
30	3000 mm
50	5000 mm

How to Order

Specify the connector assembly part number together with the part number for the plug connector type solenoid valve without connector.

(Example) Lead wire length: 2000 mm

DC	AC
VF3130-5LO1-02	VF3130-1LO1-02
V200-30-4A-20	V200-30-1A-20

How to Use DIN Terminal Connector

The DIN terminal with an IP65 (enclosure) is protected against dust and water, however, it must not be used in water.

⚠Caution

Connection

1) Loosen the set screw and pull the connector out of the solenoid valve terminal block.
2) After removing the set screw, insert a flat head screwdriver, etc. into the notch on the bottom of the terminal block and pry it open, separating the terminal block and the housing.
3) Loosen the terminal screws on the terminal block, insert the core of the lead wire into the terminal, and attach securely with the terminal screws.
   In addition, when using the DC mode type with a surge voltage suppressor (polar: S and Z types), connect wires corresponding to the polarity (+ or –) that is printed on the terminal block.
4) Secure the cord by fastening the ground nut.
   In the case of connecting wires, select cabtire cords carefully because if those out of the specified range (Ø 4.5 to Ø 7) are used, it will not be able to satisfy IP65 (enclosure).
   Tighten the ground nut and set screw within the specified range of torque.

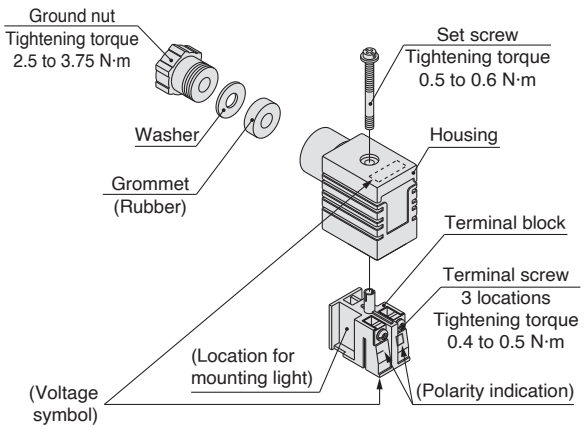

∗ Refer to page 50 for the DIN connector part no.

Changing the entry direction

After separating the terminal block and housing, the cord entry direction can be changed by attaching the housing in the opposite direction.

Note) Make sure not to damage elements, etc., with the lead wires of the cord.

Precautions

Plug in and pull out the connector vertically without tilting to one side.

Applicable cable

Cable O.D.: Ø 4.5 to Ø 7

(Reference) 0.5 mm^2 to 1.5 mm^2, 2-core or 3-core, equivalent to JIS C 3306

Applicable crimped terminal

O terminal: R1.25-4M that is specified in JIS C 2805
Y terminal: 1.25-3L, which is released by JST Mfg. Co., Ltd.
Stick terminal: Size 1.5 or shorter

Specific Product Precautions 3

Be sure to read this before handling the products. For safety instructions and 3/4/5-port solenoid valve precautions, refer to the "Handling Precautions for SMC Products" and the "Operation Manual" on the SMC website: https://www.smc.eu

DIN (EN175301-803) Terminal

Y type DIN terminal corresponds to the DIN connector with terminal pitch 10 mm, which complies with EN175301-803B. Since the terminal pitch is different from the D type DIN connector, these two types are not interchangeable.

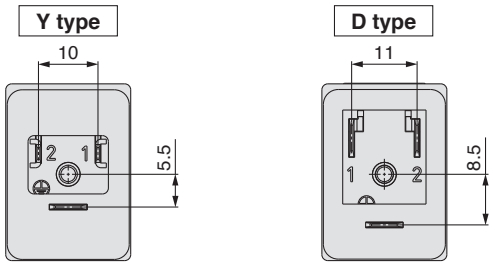

How to Order DIN Connector

⚠Caution

● **Without indicator light**

DC, AC, Other voltages: V200-□-1

● **With indicator light**

DC

Polar type (□Z) : V200-□-3-□

Non-polar type (□U) : V200-□-5-□

Rated voltage

05	24 VDC
06	12 VDC

AC (□Z) : V200-□-5-B (Rated voltage 24 VAC)

: V200-□-7-□

Connector specification

61	D type
63	Y type

Rated voltage

01	100/110 VAC [115 VAC]
02	200/220 VAC [230 VAC]
07	240 VAC

Note) For 24 VAC, the part no. is V200-61/63-5-B.

Circuit diagram with light (Built-in connector)

DC (□Z) circuit diagram

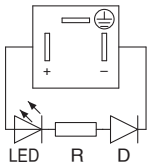

LED: Light emitting diode
D: Protective diode
R: Resistor

DC (□U) circuit diagram

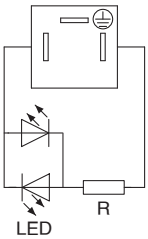

LED: Light emitting diode
R: Resistor

AC (□Z) circuit diagram

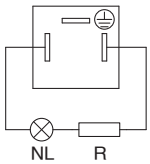

NL: Neon light, R: Resistor

Note) The 24 VAC specification is the same as those in the DC (□U) circuit diagram.

How to Use Conduit Terminal

⚠Caution

Connection

1) Loosen the set screw and remove the terminal block cover from the terminal block.
2) Loosen the terminal screws on the terminal block, insert the core of the lead wire or crimped terminal into the terminal, and attach securely with the terminal screws.
   In addition, when using the DC mode type with a surge voltage suppressor (polar: S and Z types), connect wires to terminal 1 and 2 corresponding to the polarity (+ or –) as shown on the right figure.

3) Secure the cord by fastening the ground nut.

In the case of connecting wires, select cabtire cords carefully because if those out of the specified range (Ø 4.5 to Ø 7) are used, it will not be able to satisfy IP65 (enclosure).
Tighten the ground nut and set screw within the specified range of torque.

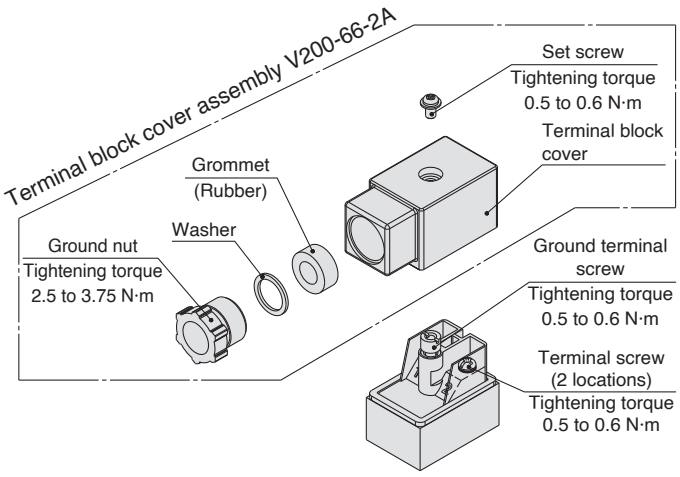

Applicable cable

Cable O.D.: Ø 4.5 to Ø 7

(Reference) 0.5 mm² to 1.5 mm², 2-core or 3-core, equivalent to JIS C 3306

Applicable crimped terminal

O terminal: Equivalent to R1.25-3 that is specified in JIS C 2805

Y terminal: Equivalent to 1.25-3, which is released by JST Mfg. Co., Ltd.

Note) Use O terminal when a ground terminal is used.

Specific Product Precautions 4

Be sure to read this before handling the products. For safety instructions and 3/4/5-port solenoid valve precautions, refer to the "Handling Precautions for SMC Products" and the "Operation Manual" on the SMC website: https://www.smc.eu

Light/Surge Voltage Suppressor

⚠Caution

<DC>

■ **Polar type**

With surge voltage suppressor (□S)

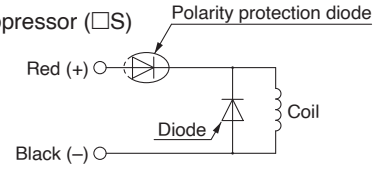

● Grommet or L/M-type plug connector

With light/surge voltage suppressor (□Z)

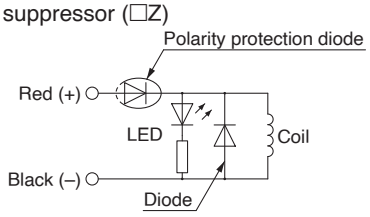

● DIN or Conduit terminal

With light/surge voltage suppressor (□Z)

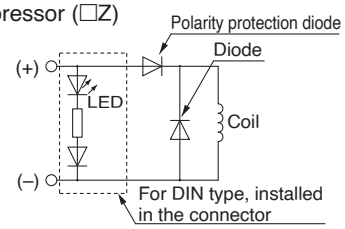

■ **Non-polar type**

With surge voltage suppressor (□R)

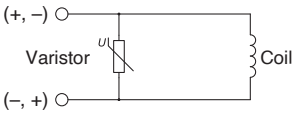

● Grommet or L/M-type plug connector

With light/surge voltage suppressor (□U)

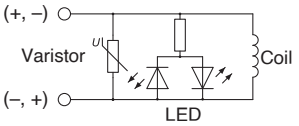

● DIN or Conduit terminal

With light/surge voltage suppressor (□U)

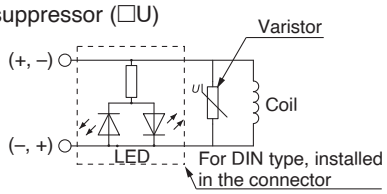

- Please connect correctly the lead wires to + (positive) and – (negative) indications on the connector. (For non-polar type, the lead wires can be connected to either one.)
- When the valve with polarity protection diode is used, the voltage will drop by approx. 1 V. Therefore, pay attention to the allowable voltage fluctuation (For details, refer to the solenoid specifications of each type of valve).
- Solenoids, whose lead wires have been pre-wired: + (positive) side red and – (negative) side black.

■ **With power saving circuit**

Power consumption is decreased by approx. 1/3 by reducing the wattage required to hold the valve in an energized state. (Effective energizing time is over 40 ms at 24 VDC.)

Refer to the electrical power waveform as shown below.

<Electrical power waveform of energy saving type>

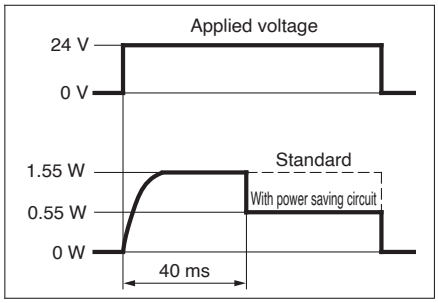

- Since the voltage will drop by approx. 0.5 V due to the transistor, pay attention to the allowable voltage fluctuation. (For details, refer to the solenoid specifications of each type of valve.)

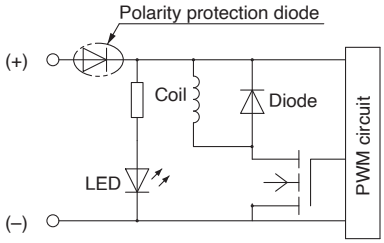

<AC>

S type is not available, since a rectifier prevents surge voltage generation.

● Grommet or L/M-type plug connector

With light/surge voltage suppressor (□Z)

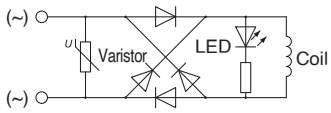

● DIN or Conduit terminal

With light/surge voltage suppressor (□Z)

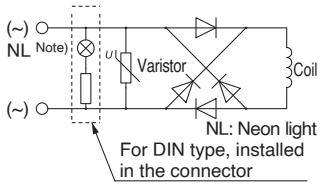

Note) LED for 24 VAC.

Residual voltage of the surge voltage suppressor

Note) If a varistor or diode surge voltage suppressor is used, there is some residual voltage to the protection element and rated voltage. Therefore, refer to the table below and pay attention to the surge voltage protection on the controller side. Also, since the response time does change, refer to the specifications on pages 2 and 16.

Residual Voltage

Surge voltage suppressor	DC		AC
	24 V	12 V	
S, Z	Approx. 1 V		Approx. 1 V
R, U	Approx. 47 V	Approx. 32 V	—

Continuous Duty

For applications such as mounting a valve on a control panel, incorporate measure to limit the heat radiation so that it is within the operating temperature range. Furthermore, do not touch it while it is being energized or right after it is energized.

Specific Product Precautions 4-1

Be sure to read this before handling the products. For safety instructions and 3/4/5-port solenoid valve precautions, refer to the "Handling Precautions for SMC Products" and the "Operation Manual" on the SMC website: https://www.smc.eu

Continuous Duty

⚠ Caution

If a valve is energized continuously for a long period of time, the rise in temperature due to heat-up of the coil assembly may cause a decline in solenoid valve performance, reduce service life, or have adverse effects on peripheral equipment. In particular, if 3 or more adjacent stations on the manifold are energized simultaneously for extended periods of time, take special care as the temperature rise will be greater. In such cases, if it is possible to select a valve with a power-saving circuit, be sure to do so.

UL Approved Product

⚠ Caution

When conformity to UL is required, the product should be used with a UL1310 Class 2 power supply.

The product is a UL approved product only if it has a c UL us mark on the body.

Specific Product Precautions 5

Be sure to read this before handling the products. For safety instructions and 3/4/5-port solenoid valve precautions, refer to the "Handling Precautions for SMC Products" and the "Operation Manual" on the SMC website: https://www.smc.eu

One-touch Fittings Precautions

⚠ Caution

When fittings are used, they may interfere with one another depending on their types and sizes. Therefore, the dimensions of the fittings to be used should first be confirmed in their respective catalogues.
Fittings whose compliance with the VF series is already confirmed are stated below. If the fitting within the applicable range is selected, there will not be any interference.

Applicable Fittings: Series KQ2H, KQ2S

Series	Model	Piping port	Port size	Applicable tubing O.D.						
				3.2	Ø 4	Ø 6	Ø 8	Ø 10	Ø 12	Ø 16
VF1000	VF1□20-□□1-M5	4(A), 2(B)	M5							
		5(EA), 3(EB)	M5							
	VF1□20-□□1-01	4(A), 2(B)	1/8							
		5(EA), 3(EB)	M5							
	VF1□3□-□□1-M5	4(A), 2(B)	M5							
	VF1□3□-□□1-01	4(A), 2(B)	1/8							
	Type 30 manifold base	1(P), 5/3(R)	1/8							
	Type 31 manifold base	1(P)	1/8							
		5(EA), 3(EB)	M5							

Series	Model	Piping port	Port size	Applicable tubing O.D.						
				Ø 3.2	Ø 4	Ø 6	Ø 8	Ø 10	Ø 12	Ø 16
VF3000	VF3□3□-□□1-01	4(A), 2(B)	1/8							
		1(P), 5(EA), 3(EB)	1/8							
	VF3□3□-□□1-02	4(A), 2(B)	1/4							
		1(P), 5(EA), 3(EB)	P: 1/4, EA, EB: 1/8							
	VF3□4□-□□1-02	4(A), 2(B)	1/4							
		1(P), 5(EA), 3(EB)	1/4							
	VF3□4□-□□1-03	4(A), 2(B)	3/8							
		1(P), 5(EA), 3(EB)	3/8							
	Type 30 manifold base	1(P), 5(R), 3(R)	1/4							
	Type 40 manifold base	4(A), 2(B)	1/4							
		1(P), 5(R), 3(R)	1/4							

Series	Model	Piping port	Port size	Applicable tubing O.D.						
				Ø 3.2	Ø 4	Ø 6	Ø 8	Ø 10	Ø 12	Ø 16
VF5000	VF5□2□-□□1-02	4(A), 2(B)	1/4							
		1(P), 5(EA), 3(EB)	1/4							
	VF5□2□-□□1-03	4(A), 2(B)	3/8							
		1(P), 5(EA), 3(EB)	3/8							
	VF5□44-□□1-02	4(A), 2(B)	1/4							
		1(P), 5(EA), 3(EB)	1/4							
	VF5□44-□□1-03	4(A), 2(B)	3/8							
		1(P), 5(EA), 3(EB)	3/8							
	VF5□44-□□1-04	4(A), 2(B)	1/2							
		1(P), 5(EA), 3(EB)	1/2							
	Type 20 manifold base	1(P), 5(R), 3(R)	3/8							
	Type 21 manifold base	1(P), 5(R), 3(R)	1/2							
	Type 40 manifold base	4(A), 2(B)	1/4							
		1(P), 5(R), 3(R)	3/8							

Low Wattage Specification (*VF1000/3000*) Specific Product Precautions 6

Be sure to read this before handling the products. For safety instructions and 3/4/5-port solenoid valve precautions, refer to the "Handling Precautions for SMC Products" and the "Operation Manual" on the SMC website: https://www.smc.eu

Manual Override

⚠ Warning

1. Non-locking push type [Standard]

Press in the direction of the arrow.

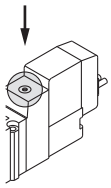

2. Push-turn locking slotted type [D type]

After pushing down, turn in the direction of the arrow. If it is not turned, it can be operated the same way as the non-locking push type.

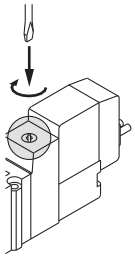

Locked position

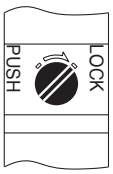

⚠ Caution

When operating the D type, use a watchmakers' screwdriver and turn lightly.
[Torque: Less than 0.1 N·m]

3. Push-turn locking lever type [E type]

After pushing down, turn in the direction of the arrow. If it is not turned, it can be operated the same way as the non-locking push type.

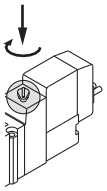

Locked position

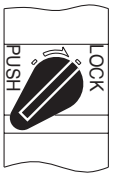

⚠ Caution

When locking the manual override with the push-turn locking type (D or E type), be sure to push it down before turning. Turning without first pushing it down can cause damage to the manual override and other trouble such as air leakage, etc.

Solenoid Valve for 200/220 VAC Specification

⚠ Warning

AC specification solenoid valves with grommet or L/M-type plug connector have a built-in rectifier circuit in the pilot section to operate the DC coil. With 200/220VAC specification pilot valves, this built-in rectifier generates heat when energized. The surface may become hot depending on the energized condition; therefore, do not touch the solenoid valves.

How to Use L/M-Type Plug Connector

⚠ Caution

1. Connector attachment/detachment

- To attach a connector, hold the lever and connector unit between your fingers and insert straight onto the pins of the solenoid valve so that the lever's pawl is pushed into the groove and locks.
- To detach a connector, remove the pawl from the groove by pushing the lever downward with your thumb, and pull the connector straight out.

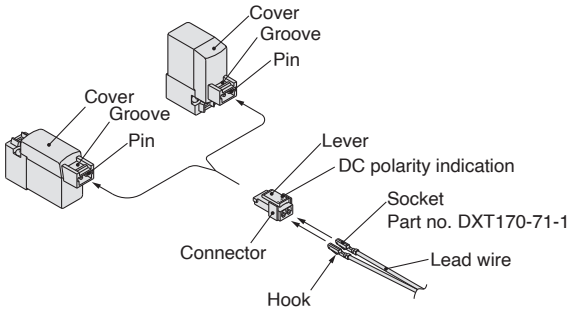

2. Crimping lead wire and socket connection

Strip 3.2 to 3.7 mm at the end of the lead wires, insert the ends of the core wires evenly into the sockets, and then crimp with a crimping tool. When this is done, take care that the coverings of the lead wires do not enter the core wire crimping area.
(Crimping tool: Part no. DXT170-75-1)

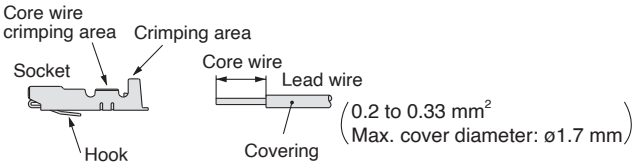

3. Socket with lead wire attachment/detachment

- **Attachment**
  Insert the sockets into the square holes of the connector (with +, – indication), and continue to push the sockets all the way in until they lock by hooking into the seats in the connector. (When they are pushed in, their hooks open and they are locked automatically.) Then, confirm that they are locked by pulling lightly on the lead wires.
- **Detachment**
  To detach a socket from a connector, pull out the lead wire while pressing the socket's hook with a stick having a thin tip (approx. 1 mm). If the socket will be used again, first spread the hook outward.

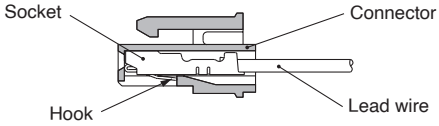

Low Wattage Specification (*VF1000/3000*) Specific Product Precautions 7

Be sure to read this before handling the products. For safety instructions and 3/4/5-port solenoid valve precautions, refer to the "Handling Precautions for SMC Products" and the "Operation Manual" on the SMC website: https://www.smc.eu

Plug Connector Lead Wire Length

⚠ Caution

Plug connector lead wires have a standard length of 300 mm, however, the following lengths are also available.

How to Order Connector Assembly

DC: **SY100−30−4A−□**

100 VAC: **SY100−30−1A−□**

200 VAC: **SY100−30−2A−□**

Other AC voltages: **SY100−30−3A−□**

Without lead wire: **SY100−30−A**
(With a connector and 2 sockets)

How to Order
Specify the connector assembly part number together with the part number for the plug connector type solenoid valve without connector.
(Example) Lead wire length: 2000 mm

DC	AC
VF3130Y-5LO1-02	VF3130Y-1LO1-02
SY100-30-4A-20	SY100-30-1A-20

● Lead wire length

Nil	300 mm
6	600 mm
10	1000 mm
15	1500 mm
20	2000 mm
25	2500 mm
30	3000 mm
50	5000 mm

Light/Surge Voltage Suppressor

⚠ Caution

<DC>

●Grommet or L/M-type plug connector

■Polar type

With surge voltage suppressor (□S)

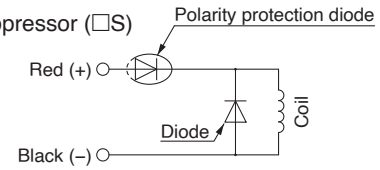

With light/surge voltage suppressor (□Z)

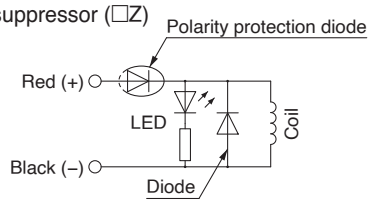

■Non-polar type

With surge voltage suppressor (□R)

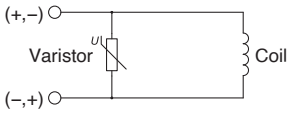

With light/surge voltage suppressor (□U)

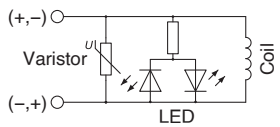

Light/Surge Voltage Suppressor

⚠ Caution

●DIN terminal

■Non-polar type

With surge voltage suppressor (□S)

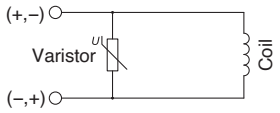

With light/surge voltage suppressor (□Z)

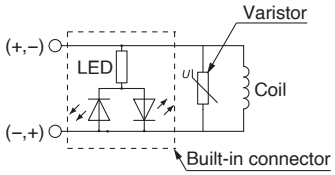

<AC>

S type is not available, since a rectifier prevents surge voltage generation.

●Grommet or L/M-type plug connector

With light/surge voltage suppressor (□Z)

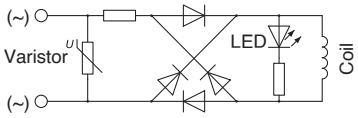

●DIN terminal

With light/surge voltage suppressor (□Z)

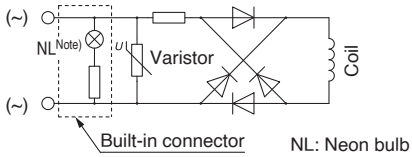

Note) LED for 24 VAC.

Residual voltage of the surge voltage suppressor

Note) If a varistor or diode surge voltage suppressor is used, there is some residual voltage to the protection element and rated voltage. Therefore, refer to the table below and pay attention to the surge voltage protection on the controller side. Also, since the response time does change, refer to the specifications.

Residual Voltage

Surge voltage suppressor	DC		AC
	24	12	
Diode	Approx. 1 V		Approx. 1 V
Varistor	Approx. 47 V	Approx. 32 V	—

Low Wattage Specification (*VF1000/3000*) Specific Product Precautions 8

Be sure to read this before handling the products. For safety instructions and 3/4/5-port solenoid valve precautions, refer to the "Handling Precautions for SMC Products" and the "Operation Manual" on the SMC website: https://www.smc.eu

How to Use DIN Terminal

⚠ Caution

Connection

1. Loosen the holding screw and pull the connector out of the solenoid valve terminal block.
2. After removing the holding screw, insert a flat head screwdriver, etc. into the notch on the bottom of the terminal block and pry it open, separating the terminal block and the housing.
3. Loosen the terminal screws (slotted screws) on the terminal block, insert the cores of the lead wires into the terminals according to the connection method, and fasten them securely with the terminal screws.
4. Secure the cord by fastening the gland nut.

⚠ Caution

When making connections, take note that using other than the supported size (Ø 3.5 to Ø 7) heavy duty cord will not satisfy IP65 (enclosure) standards. Also, be sure to tighten the gland nut and holding screw within their specified torque ranges.

Changing the entry direction

After separating the terminal block and housing, the cord entry can be changed by attaching the housing in the desired direction (4 directions at 90° intervals).

∗ When equipped with a light, be careful not to damage the light with the cord's lead wires.

Precautions

Plug in and pull out the connector vertically without tilting to one side.

Compatible cable

Cord O.D.: Ø 3.5 to Ø 7

(Reference) 0.5mm², 2-core or 3-core, equivalent to JIS C 3306

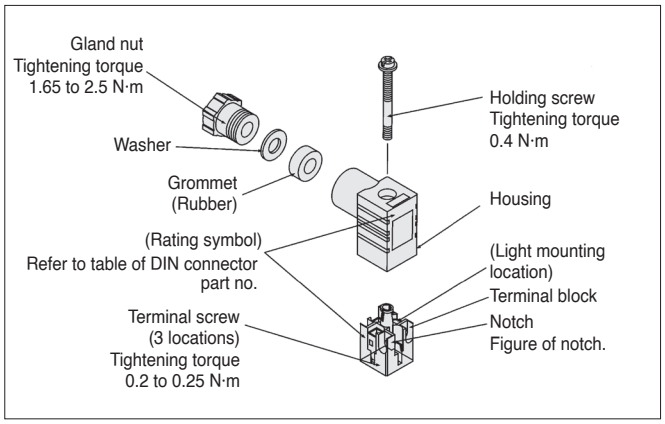

Type "Y"

DIN connector type Y is a DIN connector that confirms to the DIN pitch 8-mm standard.

- D type DIN connector with 9.4 mm pitch between terminals is not interchangeable.
- To distinguish from the D type DIN connector, "N" is listed at the end of voltage symbol. (For connector parts without lights, "N" is not indicated. Please refer to the name plate to distinguish.)
- Dimensions are completely the same as D type DIN connector.

DIN Connector Part No.

⚠ Caution

DIN terminal (D)

Without indicator light	SY100-61-1

With indicator light

Rated voltage	Voltage symbol	Part no.
24 VDC	24 V	SY100-61-3-05
12 VDC	12 V	SY100-61-3-06
100 VAC	100 V	SY100-61-2-01
200 VAC	200 V	SY100-61-2-02
110 VAC	110 V	SY100-61-2-03
220 VAC	220 V	SY100-61-2-04

DIN terminal (Y)

Without indicator light

Rated voltage	Voltage symbol	Part no.
Common to all voltages	None	SY100-82-1

With indicator light

Rated voltage	Voltage symbol	Part no.
24 VDC	24 V	SY100-82-3-05
12 VDC	12 V	SY100-82-3-06
100 VAC	100 V	SY100-82-2-01
200 VAC	200 V	SY100-82-2-02
110 VAC (115VAC)	110 V	SY100-82-2-03
220 VAC (230 VAC)	220 V	SY100-82-2-04

Circuit diagram with light

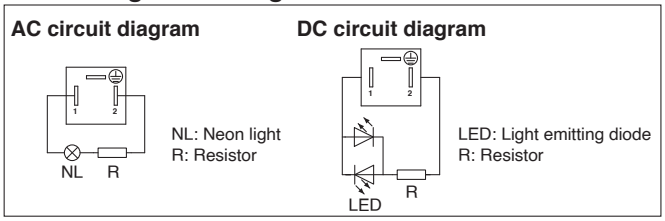

Pilot Valve

The mounting of the low wattage type pilot valve is not interchangeable with that of the standard type. Additionally, be aware that the pilot valve cannot be replaced.

⚠ Safety Instructions

These safety instructions are intended to prevent hazardous situations and/or equipment damage. These instructions indicate the level of potential hazard with the labels of **"Caution," "Warning"** or **"Danger."** They are all important notes for safety and must be followed in addition to International Standards (ISO/IEC) [1], and other safety regulations.

⚠ **Caution:**	**Caution** indicates a hazard with a low level of risk which, if not avoided, could result in minor or moderate injury.
⚠ **Warning:**	**Warning** indicates a hazard with a medium level of risk which, if not avoided, could result in death or serious injury.
⚠ **Danger:**	**Danger** indicates a hazard with a high level of risk which, if not avoided, will result in death or serious injury.

1) ISO 4414: Pneumatic fluid power – General rules relating to systems.
ISO 4413: Hydraulic fluid power – General rules relating to systems.
IEC 60204-1: Safety of machinery – Electrical equipment of machines. (Part 1: General requirements)
ISO 10218-1: Manipulating industrial robots - Safety.
etc.

⚠ Warning

1. The compatibility of the product is the responsibility of the person who designs the equipment or decides its specifications.
Since the product specified here is used under various operating conditions, its compatibility with specific equipment must be decided by the person who designs the equipment or decides its specifications based on necessary analysis and test results. The expected performance and safety assurance of the equipment will be the responsibility of the person who has determined its compatibility with the product. This person should also continuously review all specifications of the product referring to its latest catalogue information, with a view to giving due consideration to any possibility of equipment failure when configuring the equipment.

2. Only personnel with appropriate training should operate machinery and equipment.
The product specified here may become unsafe if handled incorrectly. The assembly, operation and maintenance of machines or equipment including our products must be performed by an operator who is appropriately trained and experienced.

3. Do not service or attempt to remove product and machinery/ equipment until safety is confirmed.
1. The inspection and maintenance of machinery/equipment should only be performed after measures to prevent falling or runaway of the driven objects have been confirmed.
2. When the product is to be removed, confirm that the safety measures as mentioned above are implemented and the power from any appropriate source is cut, and read and understand the specific product precautions of all relevant products carefully.
3. Before machinery/equipment is restarted, take measures to prevent unexpected operation and malfunction.

4. Contact SMC beforehand and take special consideration of safety measures if the product is to be used in any of the following conditions.
1. Conditions and environments outside of the given specifications, or use outdoors or in a place exposed to direct sunlight.
2. Installation on equipment in conjunction with atomic energy, railways, air navigation, space, shipping, vehicles, military, medical treatment, combustion and recreation, or equipment in contact with food and beverages, emergency stop circuits, clutch and brake circuits in press applications, safety equipment or other applications unsuitable for the standard specifications described in the product catalogue.
3. An application which could have negative effects on people, property, or animals requiring special safety analysis.
4. Use in an interlock circuit, which requires the provision of double interlock for possible failure by using a mechanical protective function, and periodical checks to confirm proper operation.

⚠ Caution

1. The product is provided for use in manufacturing industries.
The product herein described is basically provided for peaceful use in manufacturing industries.
If considering using the product in other industries, consult SMC beforehand and exchange specifications or a contract if necessary.
If anything is unclear, contact your nearest sales branch.

Limited warranty and Disclaimer/Compliance Requirements

The product used is subject to the following "Limited warranty and Disclaimer" and "Compliance Requirements".Read and accept them before using the product.

Limited warranty and Disclaimer

1. The warranty period of the product is 1 year in service or 1.5 years after the product is delivered, whichever is first. [2] Also, the product may have specified durability, running distance or replacement parts. Please consult your nearest sales branch.
2. For any failure or damage reported within the warranty period which is clearly our responsibility, a replacement product or necessary parts will be provided. This limited warranty applies only to our product independently, and not to any other damage incurred due to the failure of the product.
3. Prior to using SMC products, please read and understand the warranty terms and disclaimers noted in the specified catalogue for the particular products.

2) Vacuum pads are excluded from this 1 year warranty.
A vacuum pad is a consumable part, so it is warranted for a year after it is delivered. Also, even within the warranty period, the wear of a product due to the use of the vacuum pad or failure due to the deterioration of rubber material are not covered by the limited warranty.

Compliance Requirements

1. The use of SMC products with production equipment for the manufacture of weapons of mass destruction (WMD) or any other weapon is strictly prohibited.
2. The exports of SMC products or technology from one country to another are governed by the relevant security laws and regulations of the countries involved in the transaction. Prior to the shipment of a SMC product to another country, assure that all local rules governing that export are known and followed.

⚠ Caution

SMC products are not intended for use as instruments for legal metrology.
Measurement instruments that SMC manufactures or sells have not been qualified by type approval tests relevant to the metrology (measurement) laws of each country.
Therefore, SMC products cannot be used for business or certification ordained by the metrology (measurement) laws of each country.

Revision History

Edition B	- A single acting type has been added. - Made-to-order options have been added: ❶ With positioning pins on the lateral mounting surface ❷ Lateral auto switch mounting	ZT

SMC Corporation (Europe)

Austria	+43 (0)2262622800	www.smc.at	office@smc.at
Belgium	+32 (0)33551464	www.smc.be	info@smc.be
Bulgaria	+359 (0)2807670	www.smc.bg	office@smc.bg
Croatia	+385 (0)13707288	www.smc.hr	office@smc.hr
Czech Republic	+420 541424611	www.smc.cz	office@smc.cz
Denmark	+45 70252900	www.smcdk.com	smc@smcdk.com
Estonia	+372 6510370	www.smcpneumatics.ee	smc@info@smcee.ee
Finland	+358 207513513	www.smc.fi	smcfi@smc.fi
France	+33 (0)164761000	www.smc-france.fr	info@smc-france.fr
Germany	+49 (0)61034020	www.smc.de	info@smc.de
Greece	+30 210 2717265	www.smchellas.gr	sales@smchellas.gr
Hungary	+36 23513000	www.smc.hu	office@smc.hu
Ireland	+353 (0)14039000	www.smcautomation.ie	sales@smcautomation.ie
Italy	+39 03990691	www.smcitalia.it	mailbox@smcitalia.it
Latvia	+371 67817700	www.smc.lv	info@smc.lv
Lithuania	+370 5 2308118	www.smclt.lt	info@smclt.lt
Netherlands	+31 (0)205318888	www.smc.nl	info@smc.nl
Norway	+47 67129020	www.smc-norge.no	post@smc-norge.no
Poland	+48 222119600	www.smc.pl	office@smc.pl
Portugal	+351 214724500	www.smc.eu	apoioclientept@smc.smces.es
Romania	+40 213205111	www.smcromania.ro	smcromania@smcromania.ro
Russia	+7 (812)3036600	www.smc.eu	sales@smcru.com
Slovakia	+421 (0)413213212	www.smc.sk	office@smc.sk
Slovenia	+386 (0)73885412	www.smc.si	office@smc.si
Spain	+34 945184100	www.smc.eu	post@smc.smces.es
Sweden	+46 (0)86031240	www.smc.nu	smc@smc.nu
Switzerland	+41 (0)523963131	www.smc.ch	info@smc.ch
Turkey	+90 212 489 0 440	www.smcpnomatik.com.tr	info@smcpnomatik.com.tr
UK	+44 (0)845 121 5122	www.smc.uk	sales@smc.uk
South Africa	+27 10 900 1233	www.smcza.co.za	zasales@smcza.co.za

Printing ZU 00 Printed in Spain