Ledinaire Wall-mounted WL070V

WL070V LED17S/840 PSU II WH UKI ELB3

Power supply unit - Emergency lighting 3 hours duration

Public spaces and circulation areas like entrances, lobbies, corridors and staircases demand the most reliable lighting. Failsafe solutions you can trust to illuminate spaces safely and efficiently, at the same time as saving valuable energy.;With Philips Ledinaire, you get all that and more. This popular range features a selection of essential LED luminaire types that you can choose off the shelf. Like our modern, wall-mounted model that's suitable for a wide range of general lighting applications. And just like the rest of the Ledinaire range, its designed with Philips high quality standards at a very competitive price. An affordable, reliable and energy-efficient choice from the leading name in LED.

Warnings and Safety

- The Ledinaire wall-mounted model can be operated outdoors, but only when all its cables are run inside a building, with a maximum distance of 10 meters.

Product data

General information	
Beam angle of light source	120 °
Light source color	840 neutral white
Light source replaceable	No
Number of gear units	1 unit
Driver/power unit/transformer	Power supply unit
Driver included	Yes
Optic type	Symmetrical
Luminaire light beam spread	120° x 120°

Control interface	-
Connection	Push-in connector 3-pole
Emergency lighting	Emergency lighting 3 hours duration
Protection class IEC	Safety class II
Glow-wire test	Temperature 850 °C, duration 30 s
Flammability mark	For mounting on normally flammable surfaces
CE mark	CE mark
ENEC mark	-

Ledinaire Wall-mounted WL070V

Warranty period	5 years (1 year Battery)
Constant light output	No
Number of products on MCB of 16 A type B	32
Photobiological risk	Photobiological risk group 0 @ 200mm to EN62471
EU RoHS compliant	Yes
Unified glare rating CEN	22

Operating and electrical

Input Voltage	220 to 240 V
Input Frequency	50 or 60 Hz
Initial CLO power consumption	17 W
Average CLO power consumption	- W
Inrush current	20 A
Inrush time	0.04 ms
Power Factor (Min)	0.9

Controls and dimming

Dimmable	No

Mechanical and housing

Housing Material	Polycarbonate
Reflector material	-
Optic material	Polycarbonate
Optical cover/lens material	Polycarbonate
Fixation material	-
Optical cover/lens finish	Opal
Overall height	64 mm
Overall diameter	285 mm
Color	White RAL 9003
Dimensions (Height x Width x Depth)	64 x NaN x NaN mm (2.5 x NaN x NaN in)

Approval and application

Ingress protection code	IP65 [Dust penetration-protected, jet-proof]
Mech. impact protection code	IK08 [5 J vandal-protected]

Initial performance (IEC compliant)

Initial luminous flux (system flux)	1700 lm
Luminous flux tolerance	+/-10%
Initial LED luminaire efficacy	100 lm/W
Init. Corr. Color Temperature	4000 K
Init. Color Rendering Index	>80
Initial chromaticity	(0.3818, 0.3797)SDCM ≤5
Initial input power	17 W
Power consumption tolerance	+/-10%

Over time performance (IEC compliant)

Control gear failure rate at median useful life 50000 h	2.5 %
Lumen maintenance at median useful life* 50000 h	L70

Application conditions

Ambient temperature range	-20 to +40 °C
Performance ambient temperature Tq	25 °C
Maximum dim level	Not applicable
Suitable for random switching	Not applicable

Product data

Full product code	-
Order product name	WL070V LED17S/840 PSU II WH UKI ELB3
EAN/UPC - Product	-
Order code	919313000020
Numerator - Quantity Per Pack	1
Numerator - Packs per outer box	6
Material Nr. (12NC)	919313000020
Net Weight (Piece)	1.280 kg

F 850°C IP65 IK08

Dimensional drawing

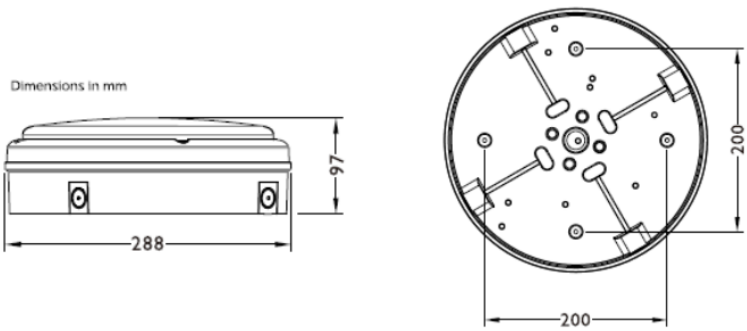

WL070V LED17S/840 PSU II WH UKI ELB3

© 2022 Signify Holding All rights reserved. Signify does not give any representation or warranty as to the accuracy or completeness of the information included herein and shall not be liable for any action in reliance thereon. The information presented in this document is not intended as any commercial offer and does not form part of any quotation or contract, unless otherwise agreed by Signify. Philips and the Philips Shield Emblem are registered trademarks of Koninklijke Philips N.V.