OPERATING INSTRUCTIONS

deTec2 Core IP69K

Safety light curtain

SICK
Sensor Intelligence.

Described product

deTec2 Core IP69K

Manufacturer

SICK AG
Erwin-Sick-Str. 1
79183 Waldkirch
Germany

Legal information

This work is protected by copyright. Any rights derived from the copyright shall be reserved for SICK AG. Reproduction of this document or parts of this document is only permissible within the limits of the legal determination of Copyright Law. Any modification, abridgment or translation of this document is prohibited without the express written permission of SICK AG.

The trademarks stated in this document are the property of their respective owner.

© SICK AG. All rights reserved.

Original document

This document is an original document of SICK AG.

Contents

1 About this document ... 6
1.1 Purpose of this document ... 6
1.2 Scope ... 6
1.3 Target groups of these operating instructions ... 6
1.4 Additional information ... 6
1.5 Symbols and document conventions ... 7

2 Safety information ... 8
2.1 Basic safety notes ... 8
2.2 Intended use ... 8
2.3 Inappropriate use ... 9
2.4 Requirements for the qualification of personnel ... 9

3 Product description ... 10
3.1 Product identification via the SICK product ID ... 10
3.2 Structure and function ... 10
3.3 Product characteristics ... 12
3.3.1 Overview of the device (sender and receiver) ... 12
3.3.2 IP 69K protective housing ... 12
3.3.3 Status indicators ... 12
3.4 Example applications ... 15

4 Project planning ... 17
4.1 Manufacturer of the machine ... 17
4.2 Operating entity of the machine ... 17
4.3 Design ... 17
4.3.1 Scanning range and protective field width ... 18
4.3.2 Minimum distance of the safety light curtain to the hazardous point ... 19
4.3.3 Minimum distance from reflective surfaces ... 21
4.3.4 Protection against interference from systems in close proximity to each other ... 23
4.4 Integration into the electrical control system ... 24
4.4.1 Restart interlock ... 26
4.4.2 External device monitoring (EDM) ... 26
4.4.3 Connection diagrams ... 27
4.5 Testing plan ... 27
4.5.1 Test rod check ... 28
4.5.2 Visual check of the machine and the protective device ... 30

5 Mounting ... 31
5.1 Unpacking ... 31
5.2 Mounting ... 31
5.2.1 Mounting the reinforced stainless steel bracket ... 33
5.2.2 Mounting the stainless steel bracket ... 34

5.2.3 Mounting the stainless steel supporting bracket 35

6 Electrical installation 36
6.1 Security 36
6.2 System connection (flying leads, 5-wire) 37

7 Commissioning 39
7.1 Overview 39
7.2 Switching on 39
7.3 Aligning the sender and receiver 39
7.3.1 Alignment with the reinforced stainless steel bracket 40
7.3.2 Alignment with the stainless steel bracket 41
7.3.3 Alignment quality display 42
7.4 Check during commissioning and modifications 43

8 Operation 44
8.1 Regular thorough check 44

9 Maintenance 45
9.1 Regular cleaning 45
9.2 Replacing the protective housing 46
9.3 Regular thorough check 46

10 Troubleshooting 47
10.1 Security 47
10.2 Diagnostic LEDs 47
10.2.1 Fault indicators 48

11 Decommissioning 50
11.1 Disposal 50

12 Technical data 51
12.1 Data sheet 51
12.2 Response time 53
12.3 Power consumption 53
12.4 Table of weights 54
12.5 Dimensional drawings 54

13 Ordering information 56
13.1 Scope of delivery 56
13.2 Ordering information 56

14 Spare parts 57
14.1 Protective housing 57

15 Accessories 58
15.1 Brackets 58
15.2 Connection technology 58

15.3 Deflector mirrors ... 58
15.3.1 Function and use ... 58
15.3.2 Change in scanning range using deflector mirrors ... 59
15.3.3 Deflector mirror PNS75 - ordering information ... 59
15.3.4 Deflector mirror PNS125 - ordering information ... 60
15.4 Mirror columns ... 60
15.5 Device columns ... 60
15.6 Cleaning agent ... 61
15.7 Test rods ... 61

16 Annex ... 62
16.1 Conformities and certificates ... 62
16.1.1 EU declaration of conformity ... 62
16.1.2 UK declaration of conformity ... 62
16.2 Note on standards ... 62
16.3 Checklist for initial commissioning and commissioning ... 64

17 List of figures ... 65

18 List of tables ... 66

1 About this document

1.1 Purpose of this document

These operating instructions contain information required during the life cycle of the safety light curtain.

These operating instructions are available to all those who work with the safety light curtain.

Please read these operating instructions carefully and make sure that you understand the content fully before working with the safety light curtain.

1.2 Scope

This document applies to the following products:

- Product code: deTec2 Core IP69K
- “Operating instructions” type label entry: 8020650

Document identification

Document part number:

- This document: 8020652
- Available language versions of this document: 8020650

You can find the current version of all documents at **www.sick.com**.

1.3 Target groups of these operating instructions

Some sections of these operating instructions are intended for certain target groups. However, the entire operating instructions are relevant for intended use of the product.

Table 1: Target groups and selected sections of these operating instructions

Target group	Sections of these operating instructions
Project developers (planners, developers, designers)	"Project planning", page 17 "Technical data", page 51 "Accessories", page 58
Installers	"Mounting", page 31
Electricians	"Electrical installation", page 36
Safety experts (such as CE authorized representatives, compliance officers, people who test and approve the application)	"Project planning", page 17 "Commissioning", page 39 "Technical data", page 51 "Checklist for initial commissioning and commissioning", page 64
Operators	"Operation", page 44 "Troubleshooting", page 47
Maintenance personnel	"Maintenance", page 45 "Troubleshooting", page 47

1.4 Additional information

www.sick.com

The following information is available on the Internet:

- Data sheets and application examples
- CAD data and dimensional drawings

- Certificates (e.g. EU declaration of conformity)
- Guide for Safe Machinery Six steps to a safe machine

1.5 Symbols and document conventions

The following symbols and conventions are used in this document:

Warnings and other notes

DANGER
Indicates a situation presenting imminent danger, which will lead to death or serious injuries if not prevented.

WARNING
Indicates a situation presenting possible danger, which may lead to death or serious injuries if not prevented.

CAUTION
Indicates a situation presenting possible danger, which may lead to moderate or minor injuries if not prevented.

NOTICE
Indicates a situation presenting possible danger, which may lead to property damage if not prevented.

NOTE
Highlights useful tips and recommendations as well as information for efficient and trouble-free operation.

Instructions to action

► The arrow denotes instructions to action.

1. The sequence of instructions for action is numbered.
2. Follow the order in which the numbered instructions are given.

✓ The check mark denotes the result of an instruction.

LED symbols

These symbols indicate the status of an LED:

○ The LED is off.
The LED is flashing.
● The LED is illuminated continuously.

Sender and receiver

These symbols indicate the sender and receiver of the device:

The symbol indicates the sender.
The symbol indicates the receiver.

2 Safety information

2.1 Basic safety notes

Integrating the product

DANGER
The product can not offer the expected protection if it is integrated incorrectly.

- ► Plan the integration of the product in accordance with the machine requirements (project planning).
- ► Implement the integration of the product in accordance with the project planning.

Mounting and electrical installation

DANGER
Death or severe injury due to electrical voltage and/or an unexpected startup of the machine

- ► Make sure that the machine is (and remains) disconnected from the voltage supply during mounting and electrical installation.
- ► Make sure that the dangerous state of the machine is and remains switched off.

Repairs and modifications

DANGER
Improper work on the product

A modified product may not offer the expected protection if it is integrated incorrectly.

- ► Apart from the procedures described in this document, do not repair, open, manipulate or otherwise modify the product.

2.2 Intended use

The deTec2 Core IP69K safety light curtain is an electro-sensitive protective device (ESPE) and is suitable for the following applications:

- Hazardous point protection
- Access protection
- Hazardous area protection

The product may be used in safety functions.

The safety light curtain fulfills the requirements of the IP 69K enclosure rating.

The deTec2 Core IP69K safety light curtain must only be used within the limits of the prescribed and specified technical data and operating conditions at all times.

Any instance of improper use, incorrect modification, or manipulation of the deTec2 Core IP69K safety light curtain shall void any warranty provided by SICK AG; furthermore, SICK AG shall not accept any responsibility or liability for any resulting damage and consequential damage.

2.3 Inappropriate use

The safety light curtain works as an indirect protective measure and cannot provide protection from parts thrown out nor from emitted radiation. Transparent objects are not detected.

Among others, the deTec2 Core IP69K safety light curtain is not suitable for the following applications:

- Outdoors
- Underwater
- In explosion-hazardous areas
- At altitudes over 3,000 m above sea level
- In environments with increased levels of ionizing radiation

2.4 Requirements for the qualification of personnel

The safety light curtain must only be configured, installed, connected, commissioned and serviced by qualified safety personnel.

Project planning

You need safety expertise to implement safety functions and select suitable products for that purpose. You need expert knowledge of the applicable standards and regulations.

Mounting, electrical installation and commissioning

You need suitable expertise and experience. You must be able to assess if the machine is operating safely.

Operation and maintenance

You need suitable expertise and experience. You must be instructed in machine operation by the machine operator. For maintenance, you must be able to assess if the machine is operating safely.

3 Product description

3.1 Product identification via the SICK product ID

SICK product ID

The SICK product ID uniquely identifies the product. It also serves as the address of the web page with information on the product.

The SICK product ID comprises the host name pid.sick.com, the part number (P/N), and the serial number (S/N), each separated by a forward slash.

For newer products, the SICK product ID is displayed as text and QR code on the type label and/or on the packaging.

Figure 1: SICK product ID

3.2 Structure and function

Overview

The deTec2 Core IP69K safety light curtain is an electro-sensitive protective device (ESPE) consisting of a sender and receiver.

A series of parallel infrared light beams forms a protective field between sender and receiver that protects the hazardous area (hazardous point, access, and hazardous area protection). When one or more light beams are completely interrupted, the safety light curtain reports the interruption in the light path to the OSSDs (safety outputs) by a signal change. The machine or its control system must evaluate the signals safely (e.g., via a safety controller or safety relay) and end the dangerous state.

Sender and receiver automatically synchronize themselves optically. An electrical connection between both components is not required.

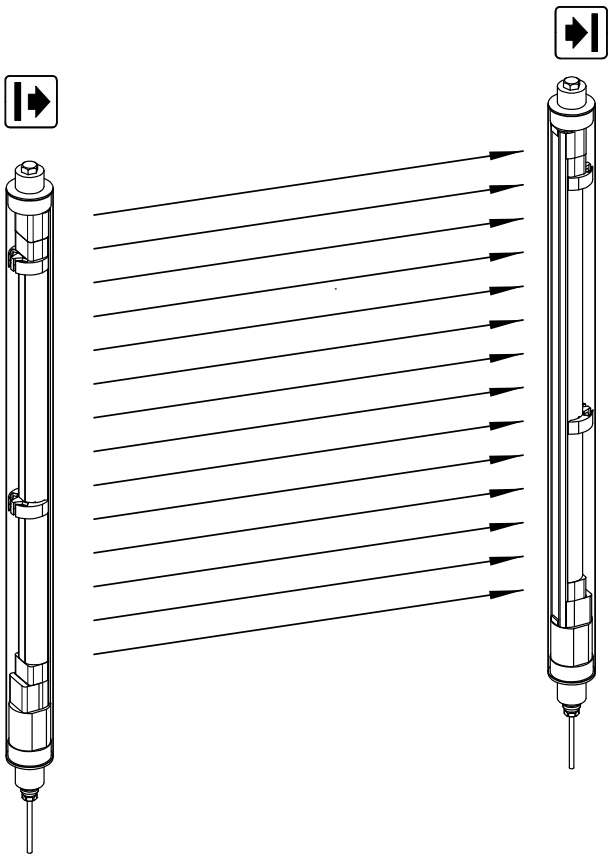

Figure 2: Sender and receiver

Protective field height

The protective field height indicates the range within which the test rod belonging to the safety light curtain is reliably detected.

Protective field width

The protective field width is the dimension of the light path between sender and receiver. The maximum protective field width is limited by the scanning range.

Resolution

The resolution describes the size of the smallest object detected by the safety light curtain in the protective field. The resolution corresponds to the diameter of the test rod belonging to the safety light curtain.

The safety light curtain has a resolution of 30 mm. This resolution provides hand protection.

Scanning range

The scanning range limits the maximum protective field width.

The scanning range is reduced by using deflector mirrors.

Further topics

- "Data sheet", page 51

3.3 Product characteristics

3.3.1 Overview of the device (sender and receiver)

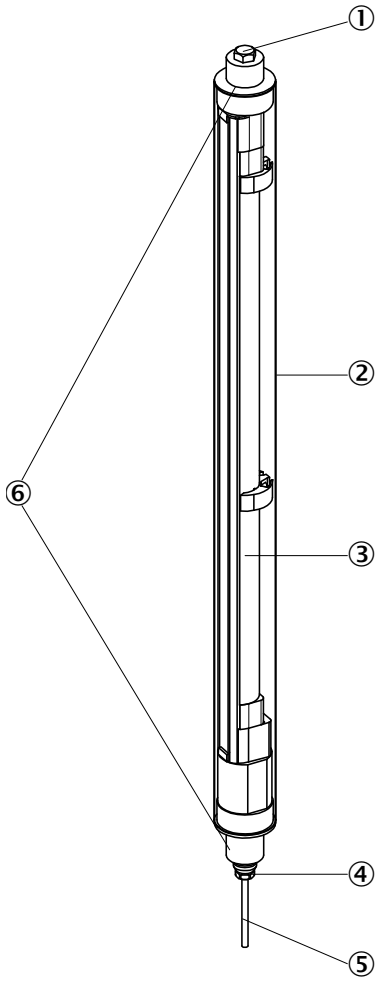

Figure 3: Device overview

① Pressure equalizing element (aeration and ventilation membrane)
② IP 69K protective housing
③ Sender or receiver
④ Cable gland
⑤ Cable with flying leads
⑥ End caps

3.3.2 IP 69K protective housing

The protective housing is well resistant to standard cleaning agents, high-pressure cleaners with a water pressure up to 100 bar, and water temperatures up to 80° C. A pressure equalizing element (aeration and ventilation membrane) prevents plastic tubes being covered in condensation and liquids from entering the housing.

3.3.3 Status indicators

Overview

The sender and receiver LEDs indicate the operational status of the safety light curtain.

Sender displays

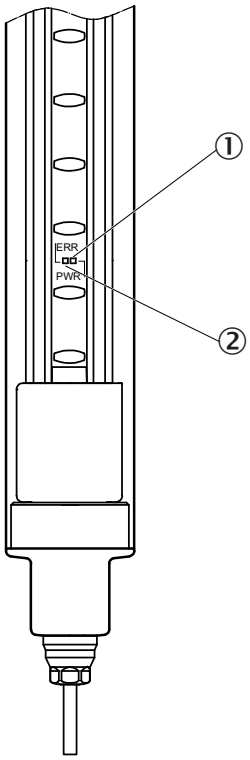

Figure 4: Sender displays

2 LEDs on the sender indicate the operational status:

Position	LED color	Display	Labeling
①	Yellow	Status indicator	PWR
②	Red	Fault indicator	ERR

Receiver displays

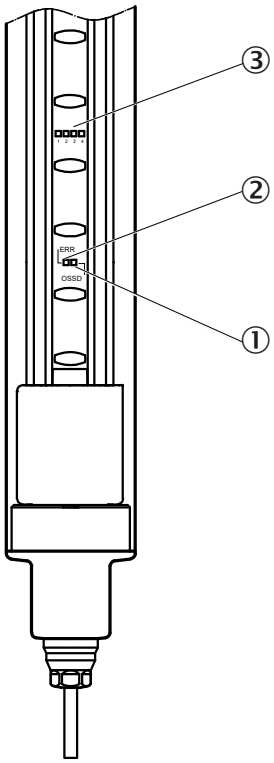

Figure 5: Receiver displays

6 LEDs on the receiver indicate the operational status:

Position	LED color	Display	Labeling
①	Red/green	OSSD status	OSSD
②	Red	Fault indication	ERR
③	Blue	Alignment quality	1, 2, 3, 4

The blue alignment quality light emitting diodes in combination with the red flashing ERR LED also denote faults.

To perform a simple alignment of the receiver, the alignment quality LEDs indicate the alignment quality once the safety light curtain has been switched on.

Further topics

- "Diagnostic LEDs", page 47

3.4 Example applications

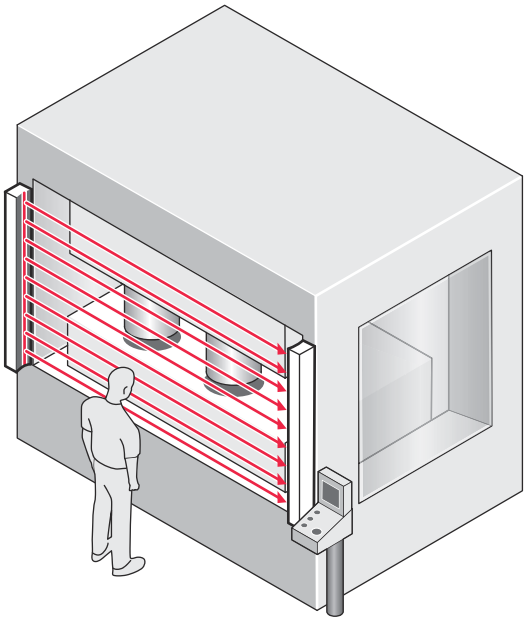

Figure 6: Hazardous point protection

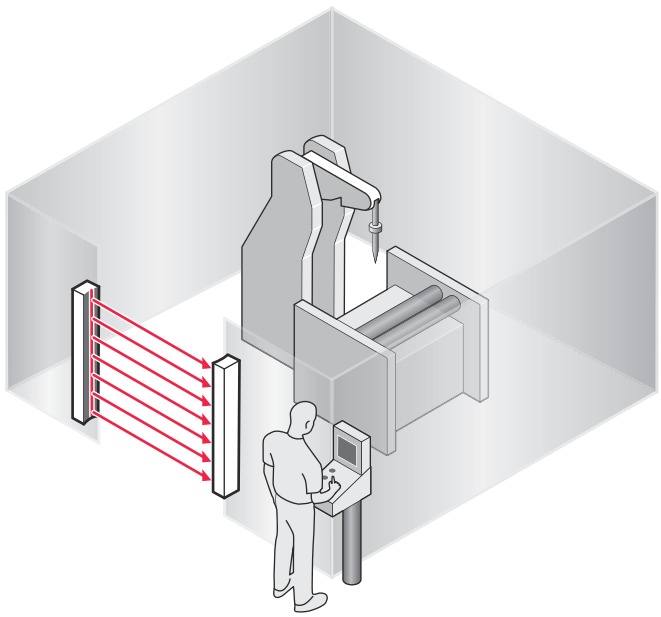

Figure 7: Access protection

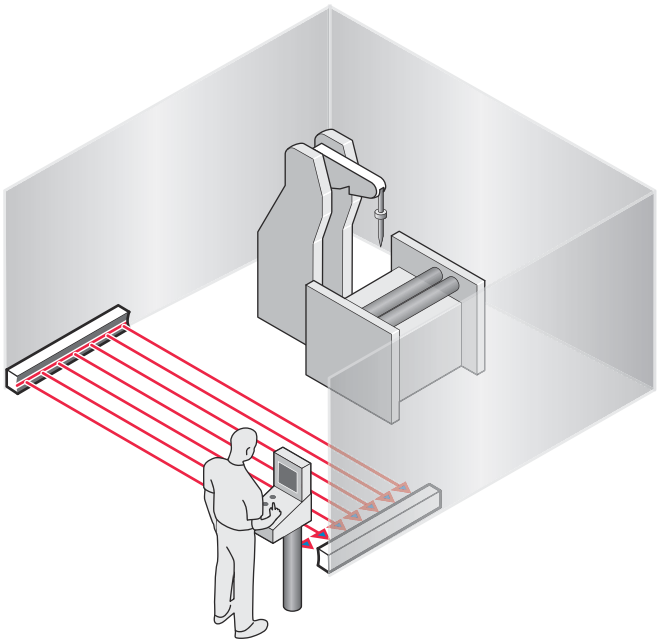

Figure 8: Hazardous area protection

4 Project planning

4.1 Manufacturer of the machine

The manufacturer of the machinery must carry out a risk assessment and apply appropriate protective measures. Further protective measures may be required in addition to the product.

The product must not be tampered with or changed, except for the procedures described in this document.

The product must only be repaired by the manufacturer of the product or by someone authorized by the manufacturer. Improper repair can result in the product not providing the expected protection.

4.2 Operating entity of the machine

Changes to the electrical integration of the product in the machine controller and changes to the mechanical mounting of the product necessitate a new risk assessment. The results of this risk assessment may require the entity operating the machine to meet the obligations of a manufacturer.

The product must not be tampered with or changed, except for the procedures described in this document.

The product must only be repaired by the manufacturer of the product or by someone authorized by the manufacturer. Improper repair can result in the product not providing the expected protection.

4.3 Design

Overview

In this section you will find important information for design.

Important information

DANGER
Hazard due to lack of effectiveness of the protective device

Persons and parts of the body to be protected may not be recognized in case of non-observance.

- ► Make sure that the following construction requirements are met so that the safety light curtain can fulfill its protective function.
  - Sender and receiver must be arranged such that persons or parts of the body are reliably detected when they enter the hazardous area.
  - Reaching under, over, and around as well as moving the safety light curtain must be prevented.
  - Check whether additional protective measures (e.g. restart interlock) are necessary when it is possible for people to be located between the protective device and the hazardous point without being detected.

DANGER
Hazard due to lack of effectiveness of the protective device

Persons and parts of the body to be protected may not be recognized in case of non-observance.

1. Make sure that the optical properties of the protective housing of the sender and receiver are not changed during operation, e.g., by:
   - Beading water, mist, frost, or ice formation on the protective housing. Remove condensation of this kind or other types of contamination, then restart the receiver.
   - Scratches or damage to the protective housing. Replace the protective housing of the respective sender or receiver if its protective housing is scratched or damaged.
2. Make sure that all reflective surfaces and objects maintain a minimum distance from the protective field.
3. Make sure that no dispersive media (e.g., dust, fog, or smoke) are within the calculated minimum distance from the protective field.

Further topics

- "Mounting", page 31

4.3.1 Scanning range and protective field width

Important information

DANGER
Hazard due to lack of effectiveness of the protective device

Persons and parts of the body to be protected may not be recognized in case of non-observance.

► The safety light curtain can only be mounted to machines on which the protective field width does not change when the safety light curtain is switched on.

Protective field width

The protective field width is the dimension of the light path between sender and receiver. The maximum protective field width is limited by the scanning range.

The protective field width is automatically calibrated when the safety light curtain is switched on during initialization and must not be changed during operation.

Scanning range

The scanning range limits the maximum protective field width. The protective field width cannot change during operation.

The scanning range is reduced by using deflector mirrors.

Further topics

- "Minimum distance from reflective surfaces", page 21
- "Technical data", page 51
- "Deflector mirrors", page 58

4.3.2 Minimum distance of the safety light curtain to the hazardous point

Overview

A minimum distance must be maintained between the safety light curtain and the hazardous point. This distance is required to prevent a person or part of their body from reaching the hazardous point before the end of the machine's dangerous state.

Calculating the minimum distance according to ISO 13855:2010

The calculation of the minimum distance is based on international or national standards and statutory requirements applicable at the place of installation of the machine.

If the minimum distance is calculated according to ISO 13855:2010, it depends on the following points:

- Machine stopping time (time interval between triggering the sensor function and the end of the machine's dangerous state)
- Response time of the protective device
- Reach or approach speed of the person
- Resolution (detection capability) of the safety light curtain
- Type of approach: orthogonal (at right angles) or parallel
- Parameters specified based on the application

For the USA (scope of OSHA and ANSI), different regulations may apply, e.g.:

a) Laws: Code of Federal Regulations, Title 29 (CFR 29), Part 1910.217

b) Standards: ANSI B11.19

Complementary information

Additional information is available in the ISO 13855:2010 standard and in the Guide for Safe Machinery.

Please note that an individual effects analysis must be carried out in case of any deviations from ISO 13855:2010.

SICK offers a stopping/run-down time measurement service in many countries.

Further topics

- "Response time", page 53

4.3.2.1 Calculating the minimum distance of the safety light curtain to the hazardous point

Important information

DANGER
Minimum distance from the hazardous point is too small

The dangerous state of the machine may not be stopped or not be stopped in a timely manner due to a minimum distance that is too small.

► Calculate the minimum distances for the machine in which the safety light curtain is integrated.
► When mounting the safety light curtain, observe the minimum distance.

Procedure

The example shows the calculation of the minimum distance in accordance with ISO 13855:2010 for an orthogonal (right-angled) approach to the protective field. A different calculation may be required depending on the application and the ambient conditions (e.g., for a protective field parallel to or at any angle to the direction of approach or an indirect approach).

1. First, calculate S using the following formula:
   S = (K × T) + 8 × (d – 14 mm)
   Where:
   - S = Minimum distance in millimeters (mm)
   - K = Approach speed (walking and/or gripping speed) of a person or a body part (mm/s), e.g., 2,000 mm/s
   - T = Machine stopping time + response time of the safety light curtain after interruption in the light path in seconds (s)
   - d = Resolution of the safety light curtain in millimeters (mm)
2. If the result S is ≤ 500 mm, then use the determined value as the minimum distance.
3. If the result S is > 500 mm, then recalculate S with an approach speed of 1,600 mm/s as follows:
   S = 1,600 mm/s × T +8 × (d – 14 mm)
4. If the new value S is > 500 mm, then use the newly determined value as the minimum distance.
5. If the new value S is ≤ 500 mm, then use 500 mm.

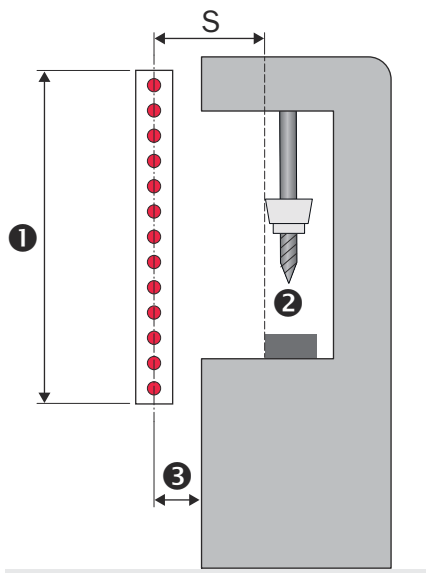

Figure 9: Minimum distance to the hazardous point for orthogonal (rectangular) approach to the protective field

① Protective field height

② Hazardous point

③ Depending on the application and distance, persons must be prevented from standing behind the protective device.

Example calculation

Machine stopping time = 290 ms

Response time after interruption of the light path = 30 ms

Resolution of the safety light curtain = 30 mm

T = 290 ms + 30 ms = 320 ms = 0.32 s

S = 2,000 mm/s × 0.32 s + 8 × (30 mm – 14 mm) = 768 mm

S > 500 mm, therefore:

S = 1,600 mm/s × 0.32 s + 8 × (30 mm – 14 mm) = 640 mm

4.3.2.2 Taking reach over into account

In accordance with ISO 13855:2010, it must not be possible to defeat the ESPE. If access to the hazardous area by reaching over a protective field cannot be prevented, the height of the protective field and minimum distance of the ESPE must be determined. This is done by comparing the calculated values based on the possible detection of limbs or body parts with the values resulting from reaching over the protective field. The greater value resulting from this comparison must be used.

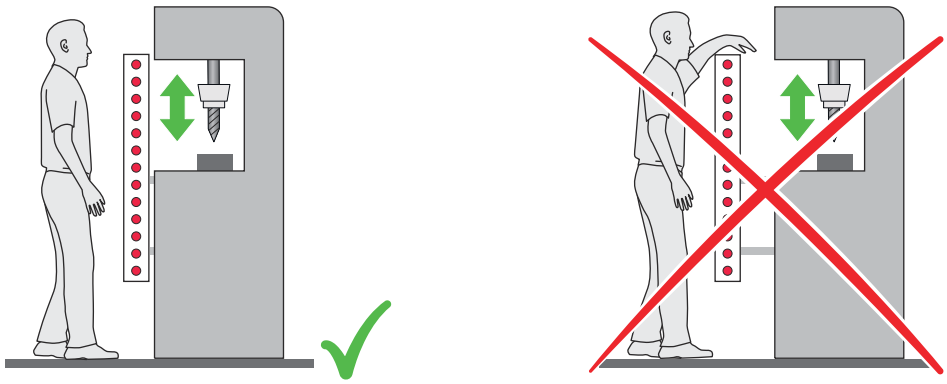

Figure 10: Representation of the accessibility of ESPE by reaching over. Left: Protective field that cannot be reached over. Right: Protective field that can be reached over.

4.3.3 Minimum distance from reflective surfaces

Overview

The light beams from the sender may be deflected by reflective surfaces and dispersive media. This can prevent an object from being detected.

Therefore, all reflective surfaces and objects (e.g., material bins, machine table, etc.) must maintain a minimum distance (a) from the protective field. This minimum distance (a) must be maintained on all sides of the protective field. This applies in horizontal, vertical and diagonal directions as well as at the end of the safety light curtain. The same area must be free of dispersive media (e.g., dust, fog, or smoke).

The minimum distance (a) depends on the distance (D) between sender and receiver (protective field width).

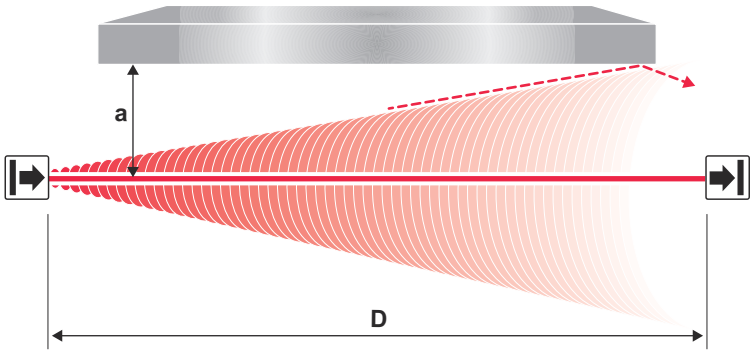

Figure 11: Minimum distance from reflective surfaces

Important information

DANGER

Hazard due to lack of effectiveness of the protective device

Reflective surfaces and dispersive media can prevent persons or parts of the body to be protected from being properly reflected and, therefore, remain undetected.

- ► Make sure that all reflective surfaces and objects maintain a minimum distance from the protective field.
- ► Make sure that no dispersive media (e.g., dust, fog, or smoke) are within the calculated minimum distance from the protective field.

Determining minimum distance from reflective surfaces with automatic calibration of the protective field width

The minimum distance can be determined as follows:

- ► Determine the distance between the sender and receiver D in meters (m).
- ► Read the minimum distance a in millimeters (mm) from the graph or calculate it using the respective formula to determine the minimum distance to reflective surfaces:

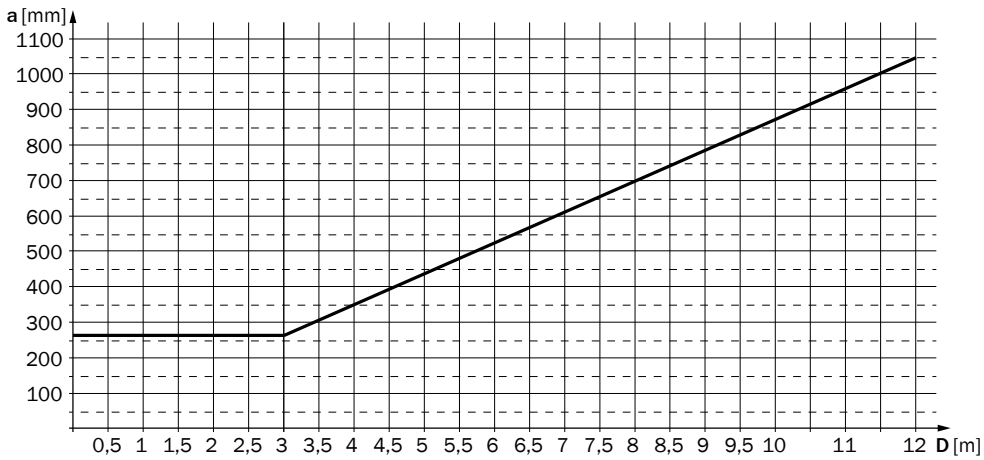

Figure 12: Graph of minimum distance from reflective surfaces

Table 2: Formula for calculating the minimum distance to reflective surfaces

Distance between sender and receiver D in m	Calculating the minimum distance to reflective surfaces a in mm
D ≤ 3 m	a = 262 mm
D > 3 m	a = tan (5°) × 1,000 mm/m × D = 87.49 × 1 mm/m × D

4.3.4 Protection against interference from systems in close proximity to each other

Overview

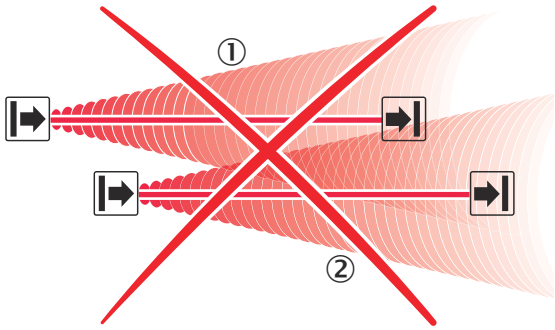

Figure 13: Preventing mutual interference of system ① and system ②

The infrared light beams of the sender of system ① can interfere with the receiver of system ②. This can disrupt the protective function of system ②. This would mean that the operator is at risk.

Avoid such installation situations or take appropriate action, e.g., install optically opaque partitions or reverse the direction of transmission of a system.

Important information

DANGER
Hazard due to lack of effectiveness of the protective device

Systems of electro-sensitive protective devices (ESPE) that operate in close proximity to each other can mutually interfere with each other.

► Use suitable measures to prevent interference between systems in close proximity to each other.

4.3.4.1 Using reversed direction of transmission

Using reversed direction of transmission

The direction of transmission of the system ② can be changed during mounting by switching the positions of the sender and receiver. With reversed direction of mounting, the receiver ② is not affected by the infrared light from the sender ①.

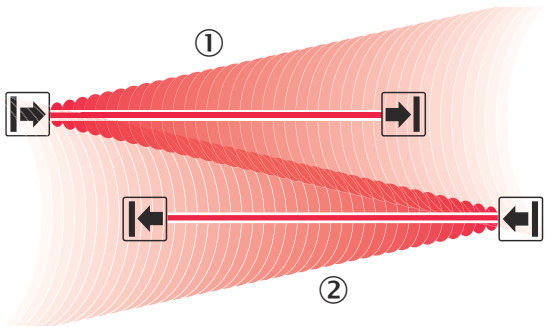

Figure 14: Trouble-free operation due to reversed direction of transmission of system ① and system ②

4.4 Integration into the electrical control system

Overview

This section contains important information about integration into the electrical control system. Information about the individual steps for the electrical installation of the device: see "Electrical installation", page 36.

Important information

DANGER
Hazard due to lack of effectiveness of the protective device

In the case of non-compliance, it is possible that the dangerous state of the machine may not be stopped or not stopped in a timely manner.

► Make sure that the following control and electrical requirements are met so that the product can fulfill its protective function.

Requirements for use

The output signals of the protective device must be analyzed by downstream controllers in such a way that the dangerous state of the machine is ended safely. Depending on the safety concept, the signal is analyzed by safety relays or a safety controller, for example.

- It must be possible to electrically influence the control of the machine.
- The electrical control of the machine must meet the requirements of IEC 60204-1.
- A restart interlock must be implemented depending on applicable national regulations or required reliability of the safety function. Because the protective device does not have an integrated restart interlock, this must be implemented in the external control, if required.
- When using a safety controller, different signal levels of both OSSDs must be detected depending on applicable national regulations or required reliability of the safety function. The maximum discrepancy time tolerated by the controller must be selected according to the application.
- The OSSD1 and OSSD2 output signals must not be connected to each other.
- In the machine controller, the signals of both OSSDs must be processed separately.

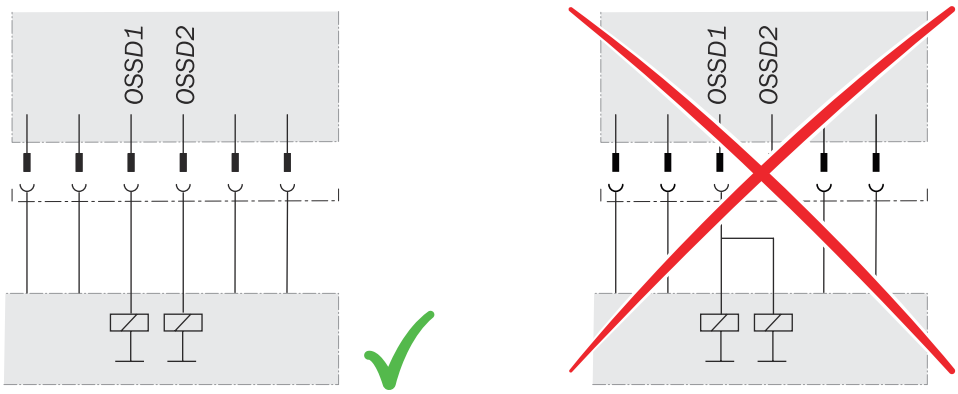

Figure 15: Dual-channel and isolated connection of OSSD1 and OSSD2

- The machine must switch to the safe state at any time if at least one of the two OSSDs switches to the OFF state.
- Prevent the formation of a potential difference between the load and the protective device. If you connect loads to the OSSDs (switch outputs) that then also switch if controlled with negative voltage (e.g., electro-mechanical contactor without reverse polarity protection diode), you must connect the 0 V connections of these loads and those of the corresponding protective device individually and directly to the same 0 V terminal strip. In the event of a fault, this is the only way to ensure that there can be no potential difference between the 0 V connections of the loads and those of the corresponding protective device.

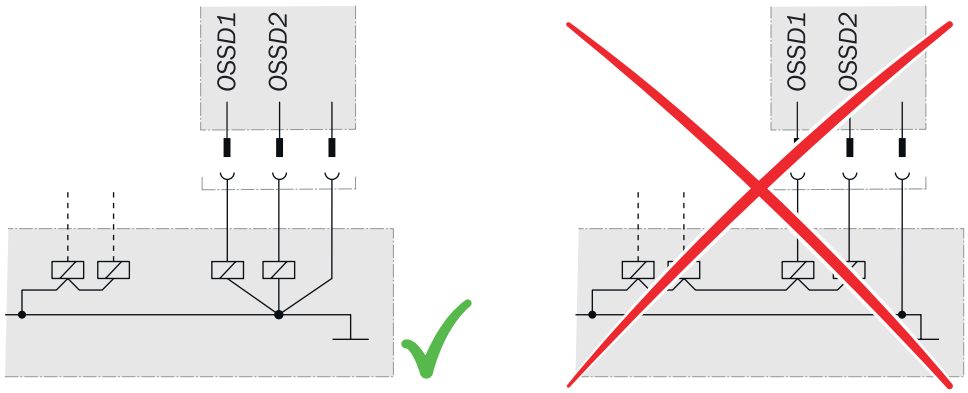

Figure 16: No potential difference between load and protective device

DANGER

Hazard due to lack of effectiveness of the protective device

In the case of non-compliance, it is possible that the dangerous state of the machine may not be stopped or not stopped in a timely manner.

Downstream contactors must be positively guided and monitored depending on applicable national regulations or required reliability of the safety function.

► Make sure that downstream contactors are monitored (external device monitoring, EDM).

NOTE

Because the protective device does not have integrated external device monitoring, this must be implemented in the external control, if required.

Requirements for the electrical control of the machine

Both outputs are short-circuit protected to 24 V DC and 0 V. If a switch-off condition is present (e.g., light path interruption), the OSSDs are in the OFF state. In the event of a device fault, at least one OSSD is in the OFF state.

The protective device complies with the rules for electromagnetic compatibility (EMC) for the industrial sector.

Radio interference cannot be ruled out when used in residential areas.

The following requirements are met:

- The external voltage supply of the protective device must be capable of buffering brief power failures of 20 ms as specified in IEC 60204-1.
- The power supply unit must provide safe isolation according to IEC 60204-1 (SELV/PELV). Suitable power supply units are available as accessories from SICK.

Further topics

- "Accessories", page 58

4.4.1 Restart interlock

Overview

The restart interlock prevents the machine from automatically starting up, for example after a safeguard has responded while the machine is operating.

Depending on the regulations which apply at the place of installation, a restart interlock may be required.

The protective device does not have an internal restart interlock. You must therefore implement a restart interlock externally via the circuitry or the control if needed, e.g. in connection with the SICK RLY3-OSSD2 / RLY3-OSSD3 safety relay.

Principle of operation

Before the machine can be restarted, the operator must reset the restart interlock.

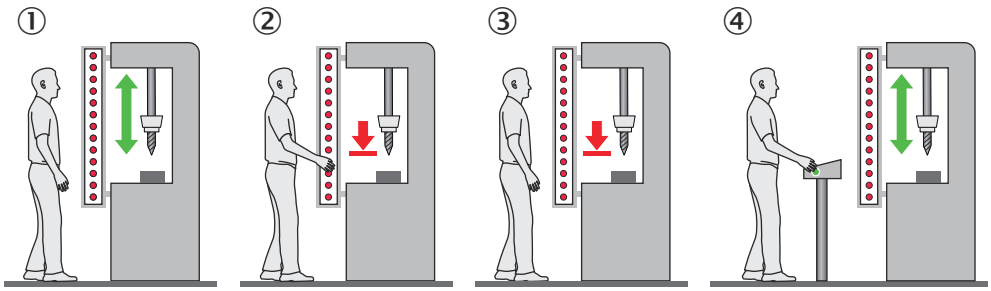

Figure 17: Schematic representation of operation with restart interlock

The dangerous state of the machine (①) is brought to an end if the light path is interrupted (②) and is not re-enabled (③) until the operator presses the reset pushbutton located outside the hazardous area (④). The machine can then be restarted.

Depending on applicable national regulations, a restart interlock must be available if it is possible to stand behind the protective device. Observe IEC 60204-1.

4.4.2 External device monitoring (EDM)

Overview

The external switching elements (external device monitoring, EDM) must be inspected in line with the regulations which apply at the place of installation or the required reliability of the safety function.

External device monitoring (EDM) monitors the status of downstream contactors.

Important information

NOTE
Because the protective device does not have integrated external device monitoring, this must be implemented in the external control, if required.

Prerequisites

- Positively guided contactors are used for shutting down the machine.

4.4.3 Connection diagrams

You can find the connection diagrams at www.sick.com. To do so, enter the product part number in the search field (part number: see the entry in the “P/N” or “Ident. no.” field on the type label).

4.5 Testing plan

Overview

The manufacturer of the machine and the operating entity must define all required thorough checks. The definition must be based on the application conditions and the risk assessment and must be documented in a traceable manner.

► When defining the thorough check, please note the following:
  - Define the type and execution of the thorough check.
  - Define the frequency of the thorough check.
  - Notify the machine operators of the thorough check and instruct them accordingly.

The following thorough checks are often defined in connection with a protective device:

- Thorough check during commissioning and modifications
- Regular thorough check

Thorough check during commissioning and modifications

Before commissioning the machine and after making changes, you must check whether the safety functions are fulfilling their planned purpose and whether persons are being adequately protected.

The protective device and its application must be thoroughly checked in the following situations:

- Before commissioning
- After changes to the mounting, the alignment, or the electrical connection
- After replacing components (e.g., sender, receiver)

The following points are often helpful for the definition of the thorough check:

- Does the thorough check have to be completed by qualified safety personnel?
- Can the thorough check be completed by personnel specially qualified and authorized to do so?
- Does the thorough check have to be documented in a traceable manner?
- Can the thorough check be carried out according to a check list? (see "Checklist for initial commissioning and commissioning", page 64)
- Do the machine operators know the function of the protective device?
- Have the machine operators been trained to work on the machine?
- Have the machine operators been notified about modifications to the machine?
- Does the hazardous area being secured have to be checked with a test rod? (see "Test rod check", page 28)

► Define all guidelines for the thorough check.

Regular thorough check

The thorough check is intended to ensure that the safety functions are fulfilling their planned purpose and whether persons are being adequately protected.

The following points are often helpful for the definition of the thorough check:

- Which thorough check must be carried out and how is it carried out?
  - Test rod check, page 28
  - Visual check of the machine and the protective device, page 30

- How often does the thorough check have to be carried out?
- Do the machine operators have to be notified of the thorough check and do they need to be instructed accordingly?

► Define all guidelines for the thorough check.

4.5.1 Test rod check

Overview

The rod test check is used to check whether the hazardous point is only accessible via the protective field of the safety light curtain and whether the protective device is able to identify each time the hazardous point is approached.

The test is carried out with an opaque test rod whose diameter corresponds to the resolution of the safety light curtain.

Important information

DANGER
Use of incorrect test rods

Persons or parts of the body to be protected may not be detected in operation.

► Only use the included test rod with the diameter specified on the type label of the safety light curtain.
► Do not use any test rods with a similar or the same diameter of other safety light curtains.

DANGER
Hazard due to unexpected starting of the machine

► Make sure that the dangerous state of the machine is and remains switched off during the check.
► Make sure that the outputs of the safety light curtain have no effect on the machine during the check of the components.

DANGER
Hazard due to lack of effectiveness of the protective device

Persons and parts of the body to be protected may not be recognized in case of non-observance.

Do not operate the machine if the OSSD LED lights up green during the test!

► If the OSSD LED lights up green during the test even if only briefly, work must stop at the machine.
► In this case, the mounting and electrical installation of the safety light curtain must be checked by qualified safety personnel.

Prerequisites

- The protective field is clear.
- The OSSD LED lights up green.

Procedure

1. Move the test rod slowly through the area to be protected (e.g., machine opening), as indicated by the arrow, see figure 18, page 29.
2. Watch the OSSD LED on the receiver during the thorough check. The OSSD LED on the receiver should continuously light up red. The OSSD LED must not illuminate green.

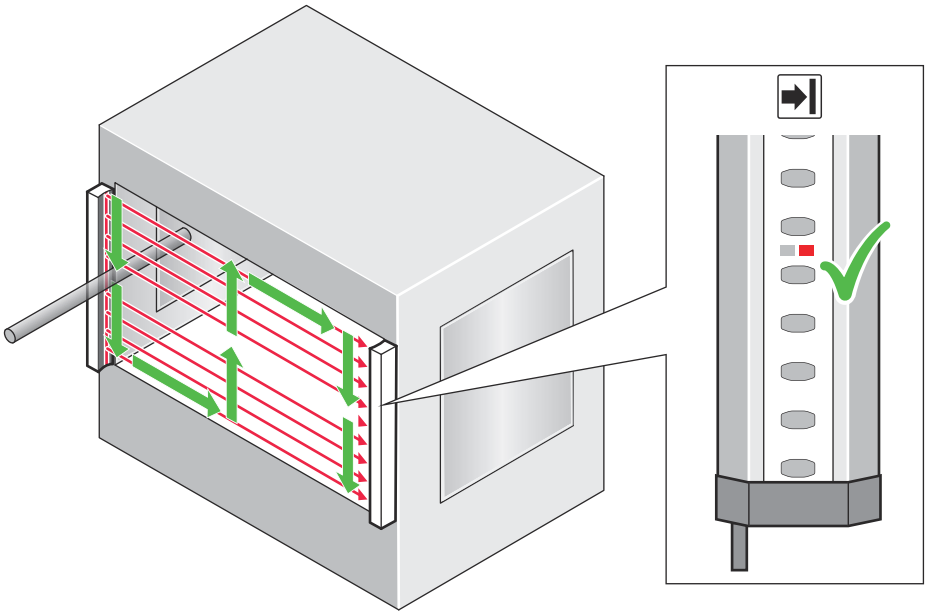

Figure 18: Test rod check: Step 1

3. Then, guide the test rod along the edges of the area to be protected, as indicated by the arrow, see figure 19.
4. Watch the OSSD LED on the receiver during the thorough check. The OSSD LED on the receiver should continuously light up red. The OSSD LED must not illuminate green.

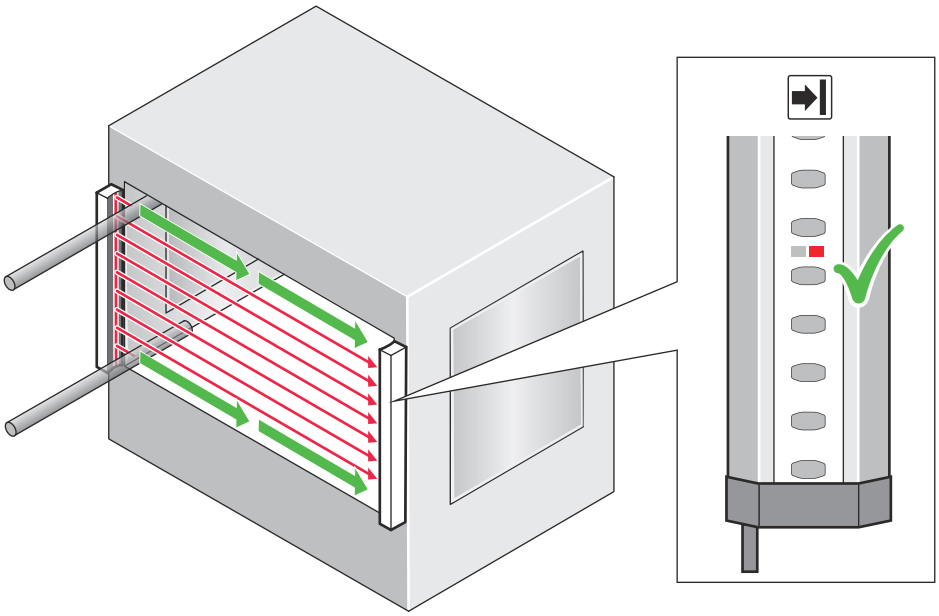

Figure 19: Test rod check: Step 3

5. If one or more deflector mirrors are used, then the test rod should also be guided slowly through the area to be protected directly in front of the deflector mirrors.
6. Watch the OSSD LED on the receiver during the thorough check. The OSSD LED on the receiver should continuously light up red. The OSSD LED must not illuminate green.

4.5.2 Visual check of the machine and the protective device

The following points are often helpful for the definition of the check:

- Has the machine been retrofitted?
- Have machine parts been removed?
- Have modifications been made to the surroundings of the machine?
- Have the protective device or its parts been dismantled?
- Is it possible to enter the hazardous area without being detected?
- Is the protective device damaged?
- Is the protective device severely contaminated?
- Is the front screen contaminated, scratched or destroyed?
- Are there any damaged cables or open cable ends?

If one of the points applies, the machine should be shut down immediately. In this case, the machine and the protective device must be checked by appropriately qualified safety personnel.

5 Mounting

5.1 Unpacking

Procedure

1. Check the components for completeness and the integrity of all parts.
2. Do not completely remove the protective film from the plastic tubes.
3. Clean the plastic tubes prior to first commissioning.
4. In the event of complaints, contact the responsible SICK subsidiary.

Further topics

- "Ordering information", page 56

5.2 Mounting

Important information

DANGER
Hazard due to lack of effectiveness of the protective device

Persons or parts of the body to be protected may not be recognized or not recognized in time in case of non-observance.

► Take into consideration the minimum distances calculated for the machine.
► Then, mount the safety light curtain such that it is not possible to reach over, under or around, or to stand behind the safety light curtain, and that the light curtain cannot be repositioned.

DANGER
Hazard due to lack of effectiveness of the protective device

Persons and parts of the body to be protected may not be recognized in case of non-observance.

► The safety light curtain can only be mounted to machines on which the protective field width does not change when the safety light curtain is switched on.

DANGER
Hazard due to lack of effectiveness of the protective device

Persons and parts of the body to be protected may not be recognized in case of non-observance.

► The end with the cable connection must point in the same direction for the sender and receiver.

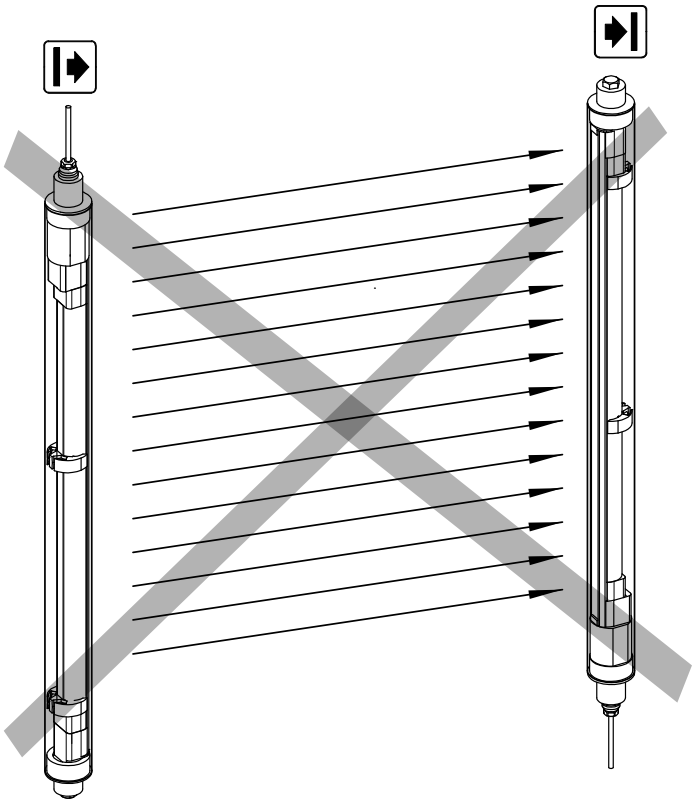

Figure 20: Sender and receiver must not be installed such that they are rotated 180° relative to each other

NOTE

Observe the following when mounting the brackets:

- Select an appropriate length for the screw to prevent any risk of injury from an overrun.

Prerequisites

- Project planning is completed.
- Assembly is carried out according to the project planning.
- Dangerous condition of the machine is and remains switched off during mounting.
- The outputs of the device do not affect the machine during mounting.
- Only use SICK-approved brackets for mounting.
- Take appropriate measures for vibration damping if vibration and shock specifications exceed the values and test conditions specified in the data sheet.

Mounting instructions

► Mount the sender and receiver on a level surface.

► Mount the sender and receiver such that a right-angled protective field is established, i.e., when mounted vertically at the same height.

► If possible, select the mounting height of the top bracket such that the bracket rests as close to the 90° bend of the protective housing end cap as possible.

► In the event of vibratory/impact loads, mount additional stainless steel supporting brackets at regular intervals on the device.

► Tightening torque for the screws used to mount the bracket: 5 Nm to 6 Nm. Tightening torque for the screws used to secure the safety light curtain in the bracket: 4 Nm to 5 Nm. Higher torques can damage the bracket, while lower torques are not secure enough to prevent the safety light curtain from moving.

- ► Make sure that the sender and receiver are aligned correctly. The optics of the sender and the receiver must be located opposite one another.
- ► If necessary, use a spirit level to check that the components are parallel.

Further topics

- "Minimum distance of the safety light curtain to the hazardous point", page 19
- "Minimum distance from reflective surfaces", page 21
- "Aligning the sender and receiver", page 39

5.2.1 Mounting the reinforced stainless steel bracket

Overview

With the reinforced stainless steel bracket, the sender and receiver can be precisely aligned with the device axis even after mounting.

The sender and receiver are mounted with 2 reinforced stainless steel brackets each.

The reinforced stainless steel bracket consists of 2 parts, which are placed onto each other. The two parts are connected and the protective device secured with two M5 screws.

An M8 screw with washer is used to mount the reinforced stainless steel bracket on a machine or profile frame.

Important information

NOTE

The following should be considered when mounting the reinforced stainless steel bracket:

- Select an appropriate screw length to prevent any risk of injury from an overrun
- Take the reinforced stainless steel bracket and the machine or profile frame into account when selecting the screw length.

Mounting the reinforced stainless steel bracket to a machine or profile frame

Table 3: Mounting the reinforced stainless steel bracket on the side and back

Mounting method	Description
On the side	With the M8 screw through the reinforced stainless steel bracket to the machine or profile frame. A screw nut or threaded hole is required on the machine or profile frame.
	With the M8 screw through the machine or profile frame to the reinforced stainless steel bracket. A screw nut is required for each reinforced stainless steel bracket.
On the back	With the M8 screw through the reinforced stainless steel bracket to the machine or profile frame. A screw nut or threaded hole is required on the machine or profile frame.

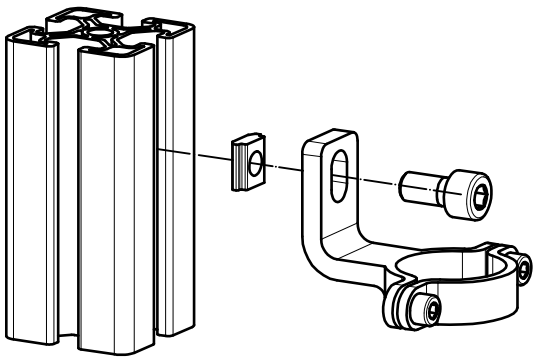

Figure 21: Mounting the reinforced stainless steel bracket to a profile frame

Procedure

1. After mounting the reinforced stainless steel bracket, guide the sender/receiver into it.
2. Use the 2 M5 screws to fix the position of the sender/receiver in the reinforced stainless steel bracket.

5.2.2 Mounting the stainless steel bracket

Overview

With the stainless steel bracket, the sender and receiver can be rotated around their longitudinal axis.

The sender and receiver are mounted with 2 stainless steel brackets each.

The stainless steel bracket consists of 2 parts, which are pushed into each other. The two parts are connected and the protective device secured with one M5 screw.

An M8 screw with washer is used to mount the stainless steel bracket on a machine or profile frame.

Important information

NOTE
When mounting the stainless steel bracket, the M8 screw can present a risk of injury if it is too long. Select an appropriate screw length to prevent any risk of injury from an overrun.

Mounting the stainless steel bracket to a machine or profile frame

Table 4: Mounting the stainless steel bracket on the side and back

Mounting method	Description
On the side	With the M8 screw through the stainless steel bracket to the machine or profile frame. A screw nut or threaded hole is required on the machine or profile frame.
On the back	With the M8 screw through the stainless steel bracket to the machine or profile frame. A screw nut or threaded hole is required on the machine or profile frame.

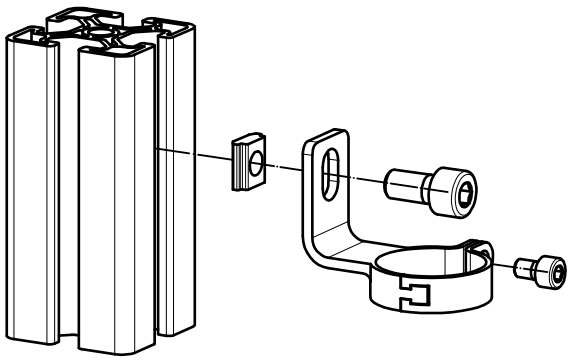

Figure 22: Mounting the stainless steel bracket to a profile frame

Procedure

1. After mounting the stainless steel bracket, guide the sender/receiver into it.
2. Use the M5 screw to fix the position of the sender/receiver in the stainless steel bracket.

5.2.3 Mounting the stainless steel supporting bracket

Overview

In the event of vibratory/impact loads according to IEC 61496, devices must be fitted with additional stainless steel supporting brackets at a protective field height of 600 mm or above.

The stainless steel supporting bracket consists of two parts, which are placed onto each other. The two parts are connected and the device secured with one M5 screw.

Mounting instructions

The following should be considered when mounting the stainless steel supporting brackets:

- The stainless steel supporting brackets may only be used in conjunction with the reinforced stainless steel brackets.
- They are mounted to the device at intervals of 300 mm ... 350 mm at a protective field height of 600 mm or above.
- The fixing hole for the stainless steel supporting bracket has a lateral deviation of 17.5 mm from the fixing hole for the reinforced stainless steel bracket.
- The stainless steel supporting brackets and the reinforced stainless steel brackets are mounted on a machine or profile frame using M8 screws. Guide the device into the brackets and tighten the M5 screws for the reinforced stainless steel brackets first, followed by the M5 screws for the stainless steel supporting brackets. Finally, tighten the M8 screws.

NOTE

To ensure the protective housing of the device does not become warped during mounting, only fully tighten the M8 screws right at the end of the mounting process.

6 Electrical installation

6.1 Security

Important information

DANGER
Hazard due to electrical voltage

Hazard due to unexpected starting of the machine

- ► Make sure that the machine is (and remains) disconnected from the voltage supply during the electrical installation.
- ► Make sure that the dangerous state of the machine is (and remains) switched off during electrical installation.
- ► Ensure that the outputs of the device have no effect on the machine during the electrical installation work.
- ► Use a suitable voltage supply.

DANGER
Hazard due to lack of effectiveness of the protective device

The dangerous state may not be stopped in the event of non-compliance.

- ► Always connect the two OSSDs separately. The two OSSDs must not be connected to each other.
- ► Connect the OSSDs such that the machine controller processes both signals separately.

DANGER
Hazard due to lack of effectiveness of the protective device

The dangerous state may not be stopped in the event of non-compliance.

- ► Prevent the formation of a potential difference between the load and the protective device.

Prerequisites

- The safety light curtain has been safely integrated into the control system and the electrical system of the machine.
- The safety light curtain is voltage-free.
- Mounting has been completed correctly.

Example: Isolated connection of OSSD1 and OSSD2

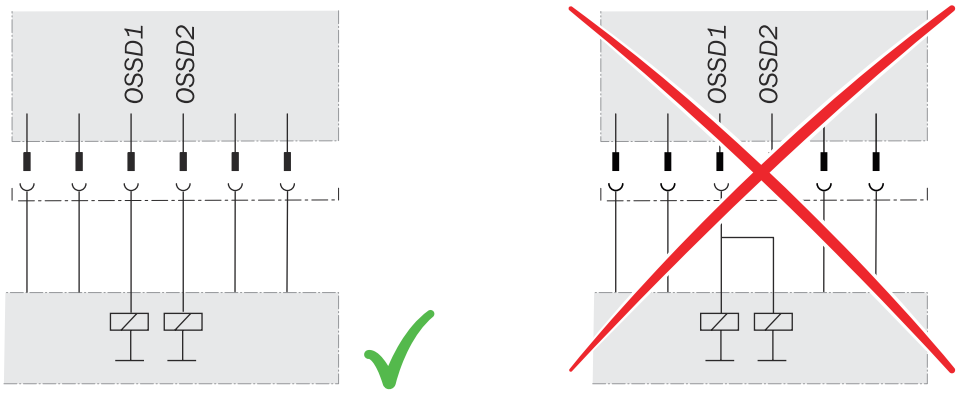

Figure 23: Dual-channel and isolated connection of OSSD1 and OSSD2

Avoiding any potential difference between load and protective device

If you connect loads to the output signal switching devices (switching outputs) that then also switch if controlled with negative voltage (e.g., electro-mechanical contactor without reverse polarity protection diode), you must connect the 0 V connections of these loads and those of the corresponding protective device separately and also directly to the same 0 V terminal strip. In the event of a fault, this is the only way to ensure that there can be no potential difference between the 0 V connections of the loads and those of the corresponding protective device.

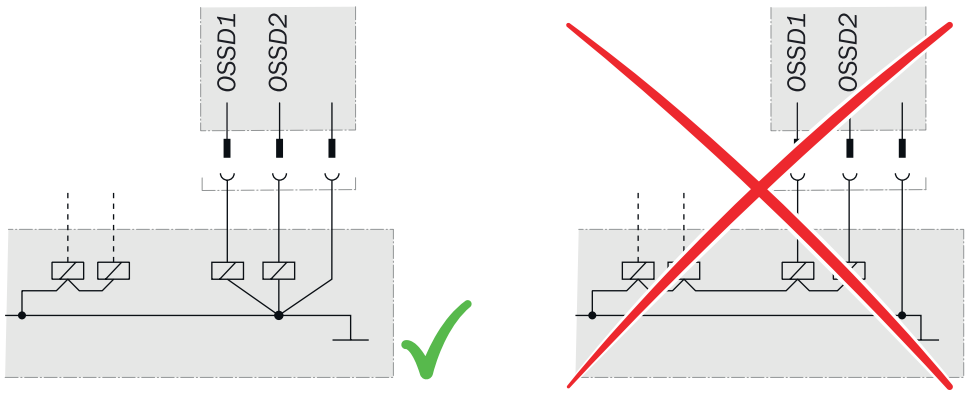

Figure 24: No potential difference between load and protective device

Further topics

- "Integration into the electrical control system", page 24
- "Technical data", page 51

6.2 System connection (flying leads, 5-wire)

Table 5: Pin assignment of system connection (flying leads, 5-wire)

Wire color	Sender	Receiver
Brown	+24 V DC (voltage supply input)	+24 V DC (voltage supply input)
White	Reserved	OSSD1 (switching output 1)
Blue	0 V DC (voltage supply input)	0 V DC (voltage supply input)
Black	Reserved	OSSD2 (switching output 2)

Wire color	Sender	Receiver
Gray	Not assigned	Not assigned

Further topics

- "Integration into the electrical control system", page 24

7 Commissioning

7.1 Overview

Prerequisites

- Project planning is completed.
- Mounting is completed.
- Electrical installation is completed.
- Dangerous state of the machine is and remains off during commissioning.
- The outputs of the device do not affect the machine during commissioning.
- The machine has been inspected and released by qualified safety personnel.
- Protective device works properly.
- The protection function is checked after each change to the machine or to the integration or the operating and boundary conditions of the device. If necessary, a new commissioning is carried out.

Further topics

- "Project planning", page 17
- "Mounting", page 31
- "Electrical installation", page 36
- "Aligning the sender and receiver", page 39
- "Check during commissioning and modifications", page 43

7.2 Switching on

Overview

After switching on, the sender and receiver initialize. All LEDs of the sender and receiver briefly light up. After initialization, the receiver displays the alignment quality using four blue LEDs. Once the safety light curtain is aligned (OSSD LED: green), the alignment indicator switches off after a certain period of time, and only the PWR LED of the sender and the OSSD LED of the receiver continue to light up.

In the event of a fault, the red fault LED flashes on the respective device. A red fault LED in combination with the blue LEDs shows the cause of the fault on the side of the receiver.

Further topics

- "Troubleshooting", page 47

7.3 Aligning the sender and receiver

Overview

Once mounting and electrical installation are complete, the sender and receiver must be aligned with each other.

Important information

DANGER
Dangerous state of the machine

► Make sure that the dangerous state of the machine is (and remains) switched off during the alignment process.
► Ensure that the outputs of the ESPE have no effect on the machine during the alignment process.

Prerequisites

- Sender and receiver have been mounted at the correct height.
- The sender and receiver can be rotated in the brackets. If necessary, loosen the fixing screws slightly.

Procedure

1. Switch on the voltage supply of the ESPE.
2. Roughly align the sender with the receiver: Rotate the sender so that it points toward the receiver.
3. Align the receiver with the sender: Rotate the receiver so that as many blue alignment quality LEDs as possible light up on the receiver.
4. If necessary, align the sender more precisely with the receiver so that as many alignment quality LEDs as possible light up on the receiver.
5. If necessary, align the receiver more precisely with the sender so that as many alignment quality LEDs as possible light up on the receiver.
6. When at least 3 (preferably 4) alignment quality LEDs light up on the receiver, fasten the components in the brackets. Torque: 4 Nm ... 5 Nm.
7. Switch the voltage supply off and back on again.
8. Check the alignment quality LEDs to make sure that the components are still correctly aligned with each other.

NOTE

Once three blue alignment quality light emitting diodes light up, alignment is good and availability is stable.

Please note that parts of the body or objects in the protective field (e.g., hand, tool) will impair the function of the alignment quality light emitting diodes. Remove all objects from the protective field to allow the alignment quality to be assessed.

Further topics

- "Alignment with the reinforced stainless steel bracket", page 40
- "Alignment with the stainless steel bracket", page 41
- "Alignment quality display", page 42
- "Diagnostic LEDs", page 47

7.3.1 Alignment with the reinforced stainless steel bracket

Prerequisites

- The sender and receiver have been mounted with a reinforced stainless steel bracket

Alignment with the reinforced stainless steel bracket

You can align the sender and receiver to each other as follows if the reinforced stainless steel bracket is used:

- Rotate

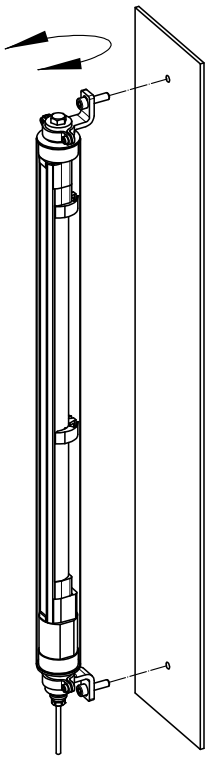

Figure 25: Rotating the sender or receiver in the reinforced stainless steel bracket

7.3.2 Alignment with the stainless steel bracket

Prerequisites

- The sender and receiver have been mounted with a stainless steel bracket

Alignment with the stainless steel bracket

You can align the sender and receiver to each other as follows if the stainless steel bracket is used:

- Rotate

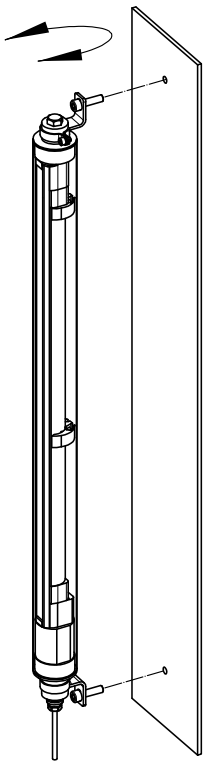

Figure 26: Rotating the sender or receiver in the stainless steel bracket

7.3.3 Alignment quality display

Important information

NOTE

Once three blue alignment quality light emitting diodes light up, alignment is good and availability is stable.

Please note that parts of the body or objects in the protective field (e.g., hand, tool) will impair the function of the alignment quality light emitting diodes. Remove all objects from the protective field to allow the alignment quality to be assessed.

Alignment quality display

Table 6: Alignment quality display

LEDs					Meaning
Alignment quality LEDs				OSSD	
1	2	3	4		
○	○	○	○	● Red	Alignment is inadequate, or the protective field is at least partially interrupted. The receiver cannot synchronize with the sender.
● Blue	○	○	○	● Red	Alignment is inadequate, or the protective field is at least partially interrupted.
● Blue	● Blue	○	○	● Red	Alignment is inadequate, or the protective field is at least partially interrupted.
● Blue	● Blue	○	○	● Green	Alignment is not good enough to provide stable availability.
● Blue	● Blue	● Blue	○	● Green	Alignment is good, stable availability. [1)]

LEDs					Meaning
Alignment quality LEDs				OSSD	
1	2	3	4		
● Blue	● Blue	● Blue	● Blue	● Green	Alignment is very good.

○ LED off. ☀ LED flashes. ● LED illuminates.

1) If the protective fields are very wide, there is a possibility that all four alignment quality LEDs will not light up even when alignment is excellent.

7.4 Check during commissioning and modifications

The thorough check is intended to ensure that the safety functions are fulfilling their planned purpose and whether persons are being adequately protected.

► Carry out the checks specified in the test plan of the manufacturer of the machine and the operating entity.

8 Operation

8.1 Regular thorough check

The thorough check is intended to ensure that the safety functions are fulfilling their planned purpose and whether persons are being adequately protected.

► Carry out the checks specified in the test plan of the manufacturer of the machine and the operating entity.

9 Maintenance

9.1 Regular cleaning

Overview

Depending on the ambient conditions of the safety light curtain, the protective housing must be cleaned regularly and in the event of contamination. Static charges can cause dust particles to be attracted to the protective housing.

The deflector mirrors also must be cleaned regularly and in the event of contamination.

Important information

DANGER
Hazard due to lack of effectiveness of the protective device

Persons and parts of the body to be protected may not be recognized in case of non-observance.

- ► Regularly check the degree of contamination on all components based on the application conditions.
- ► Observe the information concerning test rod testing.

DANGER
Hazard due to lack of effectiveness of the protective device

Persons and parts of the body to be protected may not be recognized in case of non-observance.

1. Make sure that the optical properties of the protective housing of the sender and receiver are not changed during operation, e.g., by:
   - Beading water, mist, frost, or ice formation on the protective housing. Remove condensation of this kind or other types of contamination, then restart the receiver.
   - Scratches or damage to the protective housing. Replace the protective housing of the respective sender or receiver if its protective housing is scratched or damaged.
2. Make sure that all reflective surfaces and objects maintain a minimum distance from the protective field.
3. Make sure that no dispersive media (e.g., dust, fog, or smoke) are within the calculated minimum distance from the protective field.

NOTICE

- ► Do not use aggressive or abrasive cleaning agents.
- ► Recommendation: Use lens cleaner and lens cloths from SICK.

Prerequisites

- Dangerous state of the machine is and remains off during cleaning.
- The outputs of the device do not affect the machine during cleaning.

Procedure

1. Remove any contamination from the protective housing with plenty of water.
2. Wipe the protective housing with a clean, slightly damp cloth.
3. Then dry the protective housing with a clean cloth.
4. Check the alignment of the sender and receiver after cleaning.
5. Check the effectiveness of the protective device.

Further topics

- "Test rod check", page 28
- "Minimum distance from reflective surfaces", page 21

9.2 Replacing the protective housing

Overview

If the protective housing is scratched or damaged, the protective housing must be replaced.

Important information

NOTICE

- ► The protective housing may only be replaced by qualified safety personnel.
- ► Replace the protective housing in an environment free of dust and dirt.
- ► Avoid soiling the inside of the protective housing.
- ► Do not use an additional sealant, such as silicone, for sealing the protective housing. Any vapors that are created may damage the optical components.
- ► Mount the protective housing according to the following instructions, to ensure IP 69K leak tightness of the housing.
- ► Only use a new protective housing as a replacement.

NOTICE

Enclosure rating IP 69K only applies if the protective housing and the cable gland are closed.

Required tools

- Screwdriver for the M5 and M8 mounting screws of the stainless steel brackets

Procedure

1. Make sure that the environment is clean and clear of fog, moisture, and dust.
2. Detach the bracket at the end furthest away from the cable.
3. Remove the defective protective housing and end cap at the end furthest away from the cable by rotating it gently.
4. Completely remove the protective film from the new protective housing.
5. Push the new protective housing on firmly as far as it will go.
6. Remount the device in the bracket.
7. Realign and check the device.

Further topics

- "Spare parts", page 57
- "Commissioning", page 39

9.3 Regular thorough check

The thorough check is intended to ensure that the safety functions are fulfilling their planned purpose and whether persons are being adequately protected.

- ► Carry out the checks specified in the test plan of the manufacturer of the machine and the operating entity.

10 Troubleshooting

10.1 Security

DANGER
Hazard due to lack of effectiveness of the protective device

Persons and parts of the body to be protected may not be recognized in case of non-observance.

- ► Immediately shut the machine down if the behavior of the machine cannot be clearly identified.
- ► Immediately put the machine out of operation if you cannot clearly identify or allocate the error and if you cannot safely remedy the error.
- ► Secure the machine so that it cannot switch on unintentionally.

NOTE
Additional information on troubleshooting is available from your SICK subsidiary.

10.2 Diagnostic LEDs

10.2.1 Fault indicators

Overview

In the event of an error, the type of error is indicated by the LED display on the sender or receiver.

Sender

Position of the LEDs: see "Sender displays", page 13.

Table 7: Fault indication on the sender

LED		Possible cause	Troubleshooting
PWR	ERR		
○	○	No supply voltage or supply voltage is too low or internal fault	► Check the voltage supply, see "Technical data", page 51. ► Switch the voltage supply off and then on again. ► If the error persists, replace the sender, see "Ordering information", page 56.
○	Red	The voltage was too high when operating the sender.	► Check the voltage supply, see "Technical data", page 51. ► Replace the sender, see "Ordering information", page 56.
Yellow	Red	Fault in the supply voltage	► Check the voltage supply and the power supply unit, see "Technical data", page 51. ► Switch the voltage supply off and then on again. ► If the error continues to persist, replace the defective components, see "Ordering information", page 56.
Yellow	Red	The sender identified an internal fault.	► Switch the voltage supply off and then on again. ► If the error persists, replace the sender, see "Ordering information", page 56.

○ LED off. LED flashes. ● LED illuminates.

Receiver

Position of the LEDs: see "Receiver displays", page 14.

Table 8: Fault indication on the receiver

LEDs						Possible cause	Troubleshooting
OSSD	ERR	Alignment quality					
		1	2	3	4		
● Red	⚡ Red	⚡ Blue	○	○	○	An internal fault has occurred.	► Switch the voltage supply off and then on again. ► If the error continues to persist, replace the receiver, see "Ordering information", page 56.
● Red	⚡ Red	○	⚡ Blue	○	○	Fault in the supply voltage	► Check the voltage supply and the power supply unit, see "Technical data", page 51. ► Switch the voltage supply off and then on again. ► If the error continues to persist, replace the receiver, see "Ordering information", page 56.
● Red	⚡ Red	○	○	⚡ Blue	○	The receiver has recognized beams from several senders.	► Check the distance to senders of the same design. Make sure that beams from another sender cannot hit the receiver, see "Protection against interference from systems in close proximity to each other", page 23. ► Switch the voltage supply off and then on again.
● Red	⚡ Red	○	○	○	⚡ Blue	A fault or unexpected status was identified on the OSSDs of the system connection (e.g., overvoltage, short-circuit to HIGH or short-circuit to LOW, cross-circuit, permissible load capacity exceeded)	► Check the system wiring for a fault. Make sure that the OSSDs have been wired correctly, see "Integration into the electrical control system", page 24. ► Switch the voltage supply off and then on again. ► If the error continues to persist, replace the defective components, see "Ordering information", page 56.
● Red	⚡ Red	○	⚡ Blue	○	⚡ Blue	Permanent error in the voltage supply.	► Replace the device, see "Ordering information", page 56.

○ LED off. ⚡ LED flashes. ● LED illuminates.

11 Decommissioning

11.1 Disposal

Procedure

► Always dispose of unusable devices in accordance with national waste disposal regulations.

Complementary information

SICK will be glad to help you dispose of these devices on request.

12 Technical data

12.1 Data sheet

Table 9: General system data

	Minimum	Typical	Maximum
Protective field height, depending on type	300 mm to 1,800 mm, 150 mm increments		
Resolution (detection capability)	30 mm		
Protective field width [1) 2) 3)]			
Resolution 30 mm	0 m ... 10 m	0 m ... 12.5 m	
Protection class [4)]	III (IEC 61140)		
Enclosure rating	IP65 (IEC 60529) IP66 (IEC 60529) IP67 (IEC 60529) IP69K (ISO 20653)		
Supply voltage U_V at the device [5) 6)]	19.2 V	24 V	28.8 V
Residual ripple [7)]			± 10%
Response time	"Response time", page 53		
Synchronization	Optical		
Typ (IEC 61496)	Type 2		
Category (ISO 13849)	Category 2		
Performance level (ISO 13849) [8)]	PL c		
Safety integrity level (IEC 61508) [8)]	SIL 1		
Safety integrity level (IEC 62061) [8)]	SIL 1		
PFH_D (mean probability of a dangerous failure per hour)	3.1×10^{-8}		
T_M (mission time)	20 years (ISO 13849-1)		
Safe status when an error occurs	At least one OSSD is in the OFF state.		

1) If the protective fields are very wide, there is a possibility that all four alignment quality LEDs will not light up even when alignment is excellent.
2) The minimum scanning range specifies a range in which a function is guaranteed to operate correctly and safely under industrial conditions. A sufficient level of signal reserve to ensure very high availability is included in the calculation.
3) The typical scanning range indicates a range in which the ESPE functions perfectly and reliably under industrial conditions. The level of signal reserve is enough to ensure high availability.
4) The system must be supplied with SELV/PELV in accordance with IEC 60204-1.
5) The external voltage supply must be capable of buffering brief power failures of 20 ms as specified in IEC 60204-1. Suitable power supply units are available as accessories from SICK.
6) A fuse rated maximum 4 A shall be installed in the 24 V DC power supply circuit to the device in order to limit the available current.
7) Within the limits of U_V.
8) For more detailed information on the exact configuration of your machine, please contact your relevant SICK subsidiary.

Table 10: Type of material

	Type of material
Protective housing	PMMA
End caps	Stainless steel 1.4404
Cable gland	Stainless steel 1.4404 including silicone seal
Pressure equalizing element (aeration and ventilation membrane)	PA 6

Table 11: Mechanical data

	deTec2 Core IP69K
Weight	Depending on the protective field height, see "Table of weights", page 54

Table 12: Technical data for sender

	Minimum	Typical	Maximum
Wavelength of sender		850 nm (Near-infrared (NIR), invisible)	

Table 13: Technical data for receiver

	Minimum	Typical	Maximum
Output signal switching devices (OSSDs)	2 PNP semiconductors, short-circuit protected [1], cross-circuit monitored		
Duration of OFF state	100 ms		
Switch-on delay		3 × response time	
ON state, switching voltage HIGH (U_{eff}) [2]	U_V – 2.25 V	24 V	U_V
OFF state, switching voltage LOW [2] [3]	0 V	0 V	2.0 V
Current-carrying capacity of the OSSDs			300 mA each
Leakage current of the OSSDs			2 mA each
Load capacity			2.2 µF
Load inductance			2.2 H
Test pulse data [4]			
Test pulse width	130 µs	150 µs	300 µs
Test pulse rate	3 s^{-1}	5 s^{-1}	10 s^{-1}
Permissible cable resistance			
Cable between OSSD and load [5]			2.5 Ω

1) Applies to the voltage range between -30 V and +30 V.
12)) Compatible with type 1 and 3 digital inputs in accordance with IEC 61131-2.
2) Corresponding to digital inputs of types 1 and 3 according to IEC 61131-2.
3) The specified values are the switching voltage supplied by the safety light curtain. If higher voltages are implanted externally, the maximum value of 2.0 V can be exceeded.
4) When active, the outputs are tested cyclically (brief LOW). When selecting the downstream controllers, make sure that the test pulses do not result in deactivation when using the above parameters.
5) Limit the cable resistance of the individual wires to the specified value to ensure that the light curtain functions correctly, particularly that a cross-circuit between the outputs is safely detected. (Also observe IEC 60204-1.)
The specified value applies to the total resistance of each wire including contact and connector resistances.

Table 14: Operating data

	Minimum	Typical	Maximum
System connection	Flying leads, 5-wire, 15 m pre-assembled		
Length of cable	15 m		
Cable diameter	5 mm		
Cable material	PUR		
Conductor cross section	0.34 mm^2		
Ambient operating temperature [1] [2]	–30 °C		+55 °C

	Minimum	Typical	Maximum
Air humidity (non-condensing)	15%		95%
Storage temperature	–30 °C		+70 °C
Housing cross-section	ø 50 mm		
Vibration resistance [3]	5 ... 150 Hz, 3,5 mm / 1 g (EN 60068-2-6)		
Shock resistance [4]	15 g / 6 ms (EN 60068-2-27)		
Class	3M4 (IEC TR 60721-4-3)		

1) The temperature difference between sender and receiver must not exceed 25 K.
2) The cable belonging to the device incl. the associated connector plug must not be flexibly mounted under –25° C.
3) Test conditions per axis: 1 octave/minute, 20 sweeps.
4) Test conditions per axis: 200 shocks.

12.2 Response time

Table 15: Response time dependent on the protective field height

Protective field height in mm	Response time in ms
300	10
450	10
600	10
750	11
900	11
1050	11
1200	12
1350	12
1500	13
1650	13
1800	13

12.3 Power consumption

Table 16: Power consumption for sender and receiver

Protective field height in mm	Typical power consumption for sender in W	Typical power consumption for receiver in W [1]
	Resolution 30 mm	Resolution 30 mm
300	0.82	1.63
450	0.86	1.73
600	0.91	1.82
750	0.96	1.92
900	1.01	2.02
1050	1.06	2.11
1200	1.10	2.21
1350	1.15	2.30
1500	1.20	2.40
1650	1.25	2.50
1800	1.30	2.59

1) Power discharged again via the OSSDs depending on the connected OSSD load must be added to the table values.

12.4 Table of weights

Table 17: Weight of sender and receiver

Protective field height in mm	Weight with cable in g [1]		Weight without cable in g [1]	
	Sender	Receiver	Sender	Receiver
300	1480	1490	940	950
450	1640	1650	1100	1100
600	1810	1820	1270	1280
750	1970	1980	1430	1440
900	2130	2140	1590	1600
1050	2290	2300	1750	1760
1200	2450	2460	1910	1920
1350	2620	2630	2070	2080
1500	2770	2780	2230	2240
1650	2930	2940	2390	2400
1800	3090	3100	2550	2560

[1] Tolerance: ± 50 g

12.5 Dimensional drawings

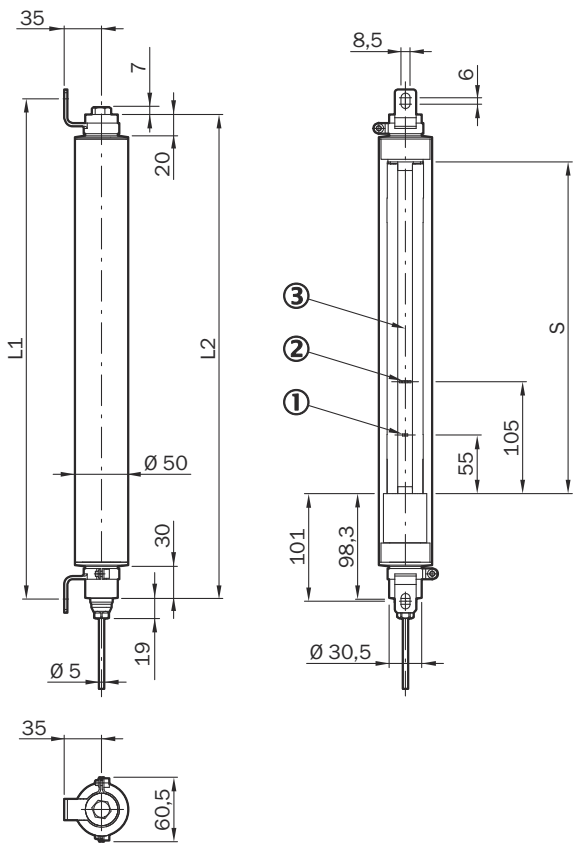

Figure 27: Dimensional drawing of sender and receiver

1 Status indicator
2 Alignment indicator
3 Optical axis

Table 18: Dimensions based on the protective field height, sender and receiver

Protective field height, nominal in mm	Protective field height, effective = dimension S in mm	L1 in mm	L2 in mm
300	311	470	455
450	461	620	605
600	611	771	756
750	761	921	906
900	911	1071	1056
1050	1061	1222	1207
1200	1211	1372	1357
1350	1360	1522	1507
1500	1510	1672	1657
1650	1660	1823	1808
1800	1810	1973	1958

13 Ordering information

13.1 Scope of delivery

Scope of delivery, sender

- Sender, mounted in protective housing, with 15 m connecting cable

Scope of delivery, receiver

- Receiver, mounted in protective housing, with 15 m connecting cable
- Test rod with diameter corresponding to the resolution of the safety light curtain
- Safety note
- Mounting instructions
- Operating instructions for download: www.sick.com

13.2 Ordering information

Table 19: Ordering information deTec2 Core IP69K 30 mm resolution

Protective field height in mm	Sender		Receiver	
	Part number	Type code	Part number	Type code
300	1219509	C2C-SB03030A10000	1219510	C2C-EB03030A10000
450	1219511	C2C-SB04530A10000	1219512	C2C-EB04530A10000
600	1219513	C2C-SB06030A10000	1219514	C2C-EB06030A10000
750	1219515	C2C-SB07530A10000	1219516	C2C-EB07530A10000
900	1219517	C2C-SB09030A10000	1219518	C2C-EB09030A10000
1050	1219519	C2C-SB10530A10000	1219520	C2C-EB10530A10000
1200	1219521	C2C-SB12030A10000	1219522	C2C-EB12030A10000
1350	1219523	C2C-SB13530A10000	1219524	C2C-EB13530A10000
1500	1219525	C2C-SB15030A10000	1219526	C2C-EB15030A10000
1650	1219527	C2C-SB16530A10000	1219528	C2C-EB16530A10000
1800	1219529	C2C-SB18030A10000	1219530	C2C-EB18030A10000

14 Spare parts

14.1 Protective housing

Table 20: Ordering information for protective housing

Designation	Protective field height in mm	Part number
Protective housing spare part, deTec IP69K	300	2096384
	450	2096385
	600	2096386
	750	2096387
	900	2096388
	1050	2096389
	1200	2096390
	1350	2096391
	1500	2096392
	1650	2096393
	1800	2096394

15 Accessories

15.1 Brackets

Table 21: Brackets ordering information

Part	Type code	Part number
Reinforced stainless steel bracket, rotatable (qty 2)	BEF-2SMMVAES2	2048373
Reinforced stainless steel bracket, rotatable (qty 4)	BEF-2SMMVAES4	2026850
Stainless steel bracket, rotatable (qty 4)	BEF-2SMMEAES4	2023708
Stainless steel support bracket (qty 2)	BEF-2AAAADES2	2026849

15.2 Connection technology

Table 22: Ordering information for power supply

Part	Type code	Part number
Output 24 V DC, 50 W (2.1 A), voltage supply NEC Class 2, SELV, PELV, input 120 V AC ... 240 V AC	PS50WE24V	7028789
Output 24 V DC, 95 W (3.9 A), voltage supply NEC Class 2, SELV, PELV, input 100 V AC ... 120 V / 220 V AC ... 240 V AC	PS95WE24V	7028790

15.3 Deflector mirrors

15.3.1 Function and use

Overview

Deflector mirrors can be used to shape the protective field to secure hazardous points from multiple sides using a single safety light curtain.

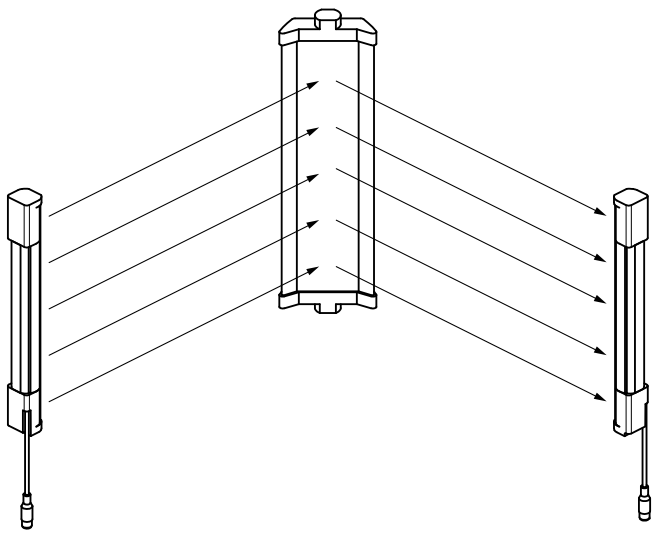

Figure 28: Example of use of deflector mirrors

Important information

DANGER
Hazard due to lack of effectiveness of the protective device

Persons and parts of the body to be protected may not be recognized in case of non-observance.

- ► Only mount deflector mirrors to solid walls or machine components. The position of the deflector mirrors must not change after alignment.
- ► Do not use deflector mirrors if contamination, beading water, condensation, or frost on the deflector mirrors is to be expected.
- ► Make sure that the deflector mirrors are intact and free of scratches, contamination, beading water, condensation, frost, etc. at all times.

Further topics

- "Mirror columns", page 60

15.3.2 Change in scanning range using deflector mirrors

Overview

The information relates to 90° beam deflection per mirror and a protective field height of 900 mm.

Important information

NOTE
The use of deflector mirrors reduces the scanning range depending on the number of deflector mirrors in the protective field.

Table 23: Scanning range with and without 1 or 2 deflector mirrors

Type	Resolution	Scanning range, typical	Scanning range with 1 deflector mirror, typical	Scanning range with 2 deflector mirrors, typical
PNS75, PNS125	30 mm	12.5 m	11.3 m	10.1 m

15.3.3 Deflector mirror PNS75 - ordering information

Table 24: Ordering information for PNS75 deflector mirror

Mirror length in mm	Max. protective field height in mm	Type code	Part number
340	300	PNS75-034	1019414
490	450	PNS75-049	1019415
640	600	PNS75-064	1019416
790	750	PNS75-079	1019417
940	900	PNS75-094	1019418
1090	1050	PNS75-109	1019419
1240	1200	PNS75-124	1019420
1390	1350	PNS75-139	1019421
1540	1500	PNS75-154	1019422
1690	1650	PNS75-169	1019423
1840	1800	PNS75-184	1019424

15.3.4 Deflector mirror PNS125 - ordering information

Table 25: Ordering information, deflector mirror PNS125

Mirror length in mm	Max. protective field height in mm	Type code	Part number
340	300	PNS125-034	1019425
490	450	PNS125-049	1019426
640	600	PNS125-064	1019427
790	750	PNS125-079	1019428
940	900	PNS125-094	1019429
1090	1050	PNS125-109	1019430
1240	1200	PNS125-124	1019431
1390	1350	PNS125-139	1019432
1540	1500	PNS125-154	1019433
1690	1650	PNS125-169	1019434
1840	1800	PNS125-184	1019435

15.4 Mirror columns

Table 26: Ordering information for PM4 mirror columns

Column height	Type code	Part number
995 mm	PM4-A099110000000	1138910
1,095 mm	PM4-A109110000000	1138911
1,195 mm	PM4-A119110000000	1138912
1,295 mm	PM4-A129110000000	1138913
1,475 mm	PM4-A147110000000	1138914
1,625 mm	PM4-A162110000000	1138915
1,775 mm	PM4-A177110000000	1138916
1,925 mm	PM4-A192110000000	1138917
2,075 mm	PM4-A207110000000	1138918
2,225 mm	PM4-A222110000000	1138919
2,375 mm	PM4-A237110000000	1138920

Complementary information

Observe the information on deflector mirrors, particularly on changing the scanning range.

Further topics

- "Deflector mirrors", page 58

15.5 Device columns

Table 27: Ordering information PC4 device columns (compact)

Column height	Type code	Part number
985 mm	PC4-C098100000000	2139633
1,085 mm	PC4-C108100000000	2139635
1,185 mm	PC4-C118100000000	2139636
1,285 mm	PC4-C128100000000	2139637

Column height	Type code	Part number
1,411 mm	PC4-C141100000000	2139638
1,561 mm	PC4-C156100000000	2139639
1,711 mm	PC4-C171100000000	2139640
1,861 mm	PC4-C186100000000	2139641
2,011 mm	PC4-C201100000000	2139642
2,161 mm	PC4-C216100000000	2139643
2,311 mm	PC4-C231100000000	2139644

15.6 Cleaning agent

Table 28: Ordering information for cleaning agents

Part	Part number
Lens cleaner (with label for North America, South America, Western Europe)	5606490
Lens cleaner (with label for Africa, Asia, Middle East)	5606721
Lens cleaner (with label for Northern Europe, Eastern Europe)	5606754
Lens cloth	4003353

15.7 Test rods

Table 29: Ordering information for test rods

Part	Part number
Test rod 30 mm	2022602
Test rod holder	2052249

16 Annex

16.1 Conformities and certificates

You can obtain declarations of conformity, certificates, and the current operating instructions for the product at www.sick.com. To do so, enter the product part number in the search field (part number: see the entry in the “P/N” or “Ident. no.” field on the type label).

16.1.1 EU declaration of conformity

Excerpt

The undersigned, representing the manufacturer, herewith declares that the product is in conformity with the provisions of the following EU directive(s) (including all applicable amendments), and that the standards and/or technical specifications stated in the EU declaration of conformity have been used as a basis for this.

- ROHS DIRECTIVE 2011/65/EU
- EMC DIRECTIVE 2014/30/EU
- MACHINERY DIRECTIVE 2006/42/EC

16.1.2 UK declaration of conformity

Excerpt

The undersigned, representing the following manufacturer herewith declares that this declaration of conformity is issued under the sole responsibility of the manufacturer. The product of this declaration is in conformity with the provisions of the following relevant UK Statutory Instruments (including all applicable amendments), and the respective standards and/or technical specifications have been used as a basis.

- Restriction of the Use of Certain Hazardous Substances in Electrical and Electronic Equipment Regulations 2012
- Electromagnetic Compatibility Regulations 2016
- Supply of Machinery (Safety) Regulations 2008

16.2 Note on standards

Standards are specified in the information provided by SICK. The table shows regional standards with similar or identical contents. Not every standard applies to all products.

Table 30: Note on standards

Standard	Standard (regional)
	China
IEC 60068-2-6	GB/T 2423.10
IEC 60068-2-27	GB/T 2423.5
IEC 60204-1	GB/T 5226.1
IEC 60529	GB/T 4208
IEC 60825-1	GB 7247.1
IEC 61131-2	GB/T 15969.2
IEC 61140	GB/T 17045
IEC 61496-1	GB/T 19436.1
IEC 61496-2	GB/T 19436.2
IEC 61496-3	GB 19436.3
IEC 61508	GB/T 20438

Standard	Standard (regional)
	China
IEC 62061	GB 28526
ISO 13849-1	GB/T 16855.1
ISO 13855	GB/T 19876

16.3 Checklist for initial commissioning and commissioning

Checklist for manufacturers or installers for installing electro-sensitive protective device (ESPE)

The details relating to the items listed below must be available no later than when the system is commissioned for the first time. However, these depend on the specific application (the requirements of which must be reviewed by the manufacturer or installer).

This checklist should be retained and kept with the machine documentation to serve as reference during recurring tests.

This checklist does not replace the initial commissioning, nor the regular inspection by qualified safety personnel.

Have the safety rules and regulations been observed in compliance with the directives and standards applicable to the machine?	Yes ☐ No ☐
Are the applied directives and standards listed in the declaration of conformity?	Yes ☐ No ☐
Does the protective device correspond to the required PL/SIL and PFH in accordance with ISO 13849-1/IEC 62061 and the required type in accordance with IEC 61496-1?	Yes ☐ No ☐
Is access to the hazardous area or hazardous point only possible through the protective field of the ESPE?	Yes ☐ No ☐
Have appropriate measures been taken to protect (mechanical protection) or monitor (protective devices) any persons or objects in the hazardous area when protecting a hazardous area or hazardous point, and have these devices been secured or locked to prevent their removal?	Yes ☐ No ☐
Are additional mechanical protective measures fitted and secured against manipulation which prevent reaching below, above or around the ESPE?	Yes ☐ No ☐
Has the maximum shutdown and/or stopping time of the machine been measured, specified and documented (at the machine and/or in the machine documentation)?	Yes ☐ No ☐
Has the ESPE been mounted such that the required minimum distance from the nearest hazardous point has been achieved?	Yes ☐ No ☐
Are the ESPE devices properly mounted and secured against manipulation after alignment?	Yes ☐ No ☐
Are the required protective measures against electric shock in effect (protection class)?	Yes ☐ No ☐
Is the control switch for resetting the protective devices (ESPE) or restarting the machine present and correctly installed?	Yes ☐ No ☐
Are the outputs of the ESPE (OSSDs or safety outputs via the network) integrated according to the required PL/SIL in accordance with ISO 13849-1 / IEC 62061 and does the integration correspond to the circuit diagrams?	Yes ☐ No ☐
Has the protective function been checked in compliance with the test notes of this documentation?	Yes ☐ No ☐
Are the specified protective functions effective at every operating mode that can be set?	Yes ☐ No ☐
Are the switching elements activated by the ESPE, e.g. contactors, valves, monitored?	Yes ☐ No ☐
Is the ESPE effective over the entire period of the dangerous state?	Yes ☐ No ☐
Once initiated, will a dangerous state be stopped when switching the ESPE on or off and when changing the operating mode, or when switching to another protective device?	Yes ☐ No ☐

17 List of figures

1. SICK product ID....10
2. Sender and receiver.... 11
3. Device overview.... 12
4. Sender displays....13
5. Receiver displays.... 14
6. Hazardous point protection....15
7. Access protection.... 15
8. Hazardous area protection....16
9. Minimum distance to the hazardous point for orthogonal (rectangular) approach to the protective field....20
10. Representation of the accessibility of ESPE by reaching over. Left: Protective field that cannot be reached over. Right: Protective field that can be reached over.....21
11. Minimum distance from reflective surfaces.... 21
12. Graph of minimum distance from reflective surfaces.... 22
13. Preventing mutual interference of system ① and system ②.... 23
14. Trouble-free operation due to reversed direction of transmission of system ① and system ②.... 23
15. Dual-channel and isolated connection of OSSD1 and OSSD2....24
16. No potential difference between load and protective device.... 25
17. Schematic representation of operation with restart interlock....26
18. Test rod check: Step 1....29
19. Test rod check: Step 3....29
20. Sender and receiver must not be installed such that they are rotated 180° relative to each other....32
21. Mounting the reinforced stainless steel bracket to a profile frame.... 34
22. Mounting the stainless steel bracket to a profile frame.... 35
23. Dual-channel and isolated connection of OSSD1 and OSSD2....37
24. No potential difference between load and protective device.... 37
25. Rotating the sender or receiver in the reinforced stainless steel bracket.... 41
26. Rotating the sender or receiver in the stainless steel bracket.... 42
27. Dimensional drawing of sender and receiver.... 54
28. Example of use of deflector mirrors.... 58

18 List of tables

1. Target groups and selected sections of these operating instructions....6
2. Formula for calculating the minimum distance to reflective surfaces....22
3. Mounting the reinforced stainless steel bracket on the side and back....33
4. Mounting the stainless steel bracket on the side and back....34
5. Pin assignment of system connection (flying leads, 5-wire)....37
6. Alignment quality display....42
7. Fault indication on the sender....48
8. Fault indication on the receiver....49
9. General system data....51
10. Type of material....51
11. Mechanical data....52
12. Technical data for sender....52
13. Technical data for receiver....52
14. Operating data....52
15. Response time dependent on the protective field height....53
16. Power consumption for sender and receiver....53
17. Weight of sender and receiver....54
18. Dimensions based on the protective field height, sender and receiver....55
19. Ordering information deTec2 Core IP69K 30 mm resolution....56
20. Ordering information for protective housing....57
21. Brackets ordering information....58
22. Ordering information for power supply....58
23. Scanning range with and without 1 or 2 deflector mirrors....59
24. Ordering information for PNS75 deflector mirror....59
25. Ordering information, deflector mirror PNS125....60
26. Ordering information for PM4 mirror columns....60
27. Ordering information PC4 device columns (compact)....60
28. Ordering information for cleaning agents....61
29. Ordering information for test rods....61
30. Note on standards....62

8020652/1K34/2025-07-18/en

Australia
Phone +61 (3) 9457 0600
1800 33 48 02 – tollfree
E-Mail sales@sick.com.au

Austria
Phone +43 (0) 2236 62288-0
E-Mail office@sick.at

Belgium/Luxembourg
Phone +32 (0) 2 466 55 66
E-Mail info@sick.be

Brazil
Phone +55 11 3215-4900
E-Mail comercial@sick.com.br

Canada
Phone +1 905.771.1444
E-Mail cs.canada@sick.com

Czech Republic
Phone +420 234 719 500
E-Mail sick@sick.cz

Chile
Phone +56 (2) 2274 7430
E-Mail chile@sick.com

China
Phone +86 20 2882 3600
E-Mail info.china@sick.net.cn

Denmark
Phone +45 45 82 64 00
E-Mail sick@sick.dk

Finland
Phone +358-9-25 15 800
E-Mail sick@sick.fi

France
Phone +33 1 64 62 35 00
E-Mail info@sick.fr

Germany
Phone +49 (0) 2 11 53 010
E-Mail info@sick.de

Greece
Phone +30 210 6825100
E-Mail office@sick.com.gr

Hong Kong
Phone +852 2153 6300
E-Mail ghk@sick.com.hk

Hungary
Phone +36 1 371 2680
E-Mail ertekesites@sick.hu

India
Phone +91-22-6119 8900
E-Mail info@sick-india.com

Israel
Phone +972 97110 11
E-Mail info@sick-sensors.com

Italy
Phone +39 02 27 43 41
E-Mail info@sick.it

Japan
Phone +81 3 5309 2112
E-Mail support@sick.jp

Malaysia
Phone +603-8080 7425
E-Mail enquiry.my@sick.com

Mexico
Phone +52 (472) 748 9451
E-Mail mexico@sick.com

Netherlands
Phone +31 (0) 30 204 40 00
E-Mail info@sick.nl

New Zealand
Phone +64 9 415 0459
0800 222 278 – tollfree
E-Mail sales@sick.co.nz

Norway
Phone +47 67 81 50 00
E-Mail sick@sick.no

Poland
Phone +48 22 539 41 00
E-Mail info@sick.pl

Romania
Phone +40 356-17 11 20
E-Mail office@sick.ro

Singapore
Phone +65 6744 3732
E-Mail sales.gsg@sick.com

Slovakia
Phone +421 482 901 201
E-Mail mail@sick-sk.sk

Slovenia
Phone +386 591 78849
E-Mail office@sick.si

South Africa
Phone +27 10 060 0550
E-Mail info@sickautomation.co.za

South Korea
Phone +82 2 786 6321/4
E-Mail infokorea@sick.com

Spain
Phone +34 93 480 31 00
E-Mail info@sick.es

Sweden
Phone +46 10 110 10 00
E-Mail info@sick.se

Switzerland
Phone +41 41 619 29 39
E-Mail contact@sick.ch

Taiwan
Phone +886-2-2375-6288
E-Mail sales@sick.com.tw

Thailand
Phone +66 2 645 0009
E-Mail marcom.th@sick.com

Turkey
Phone +90 (216) 528 50 00
E-Mail info@sick.com.tr

United Arab Emirates
Phone +971 (0) 4 88 65 878
E-Mail contact@sick.ae

United Kingdom
Phone +44 (0)17278 31121
E-Mail info@sick.co.uk

USA
Phone +1 800.325.7425
E-Mail info@sick.com

Vietnam
Phone +65 6744 3732
E-Mail sales.gsg@sick.com

Detailed addresses and further locations at **www.sick.com**