ENGLISH

Datasheet

Reversible Synchronous Motor - 250 RPM

RS Stock No: 9180720

Application

Recorders, Instrumentation, Diamond machinery, Valve Actuators, Light displays, Textile machinery, Medical equipment, Air conditioning & refrigeration, Dampers, Peristaltic Pumps, Dosing Pumps, Vending machines CCTV Camera positioning, any timing and positioning Application.

Design

MTR3a reversing synchronous motor is of the permanent magnet type with two stator windings, for single phase AC 50/60 Hz. Phase displacement of the excitation current is achieved by connecting a capacitor in series with one of the stator windings. The sense of rotation is determined by the resulting circular rotating field. Electrial reversal of the sense of rotation is effected by means of a single-pole changeover switch.

The 24 pole rotor which has a steel shaft polished to a mirror-finish rotates in sintered bronze bearings.

Motor can be provided with mounting plate / screw clip for fixing.

Standard Data

Motor type		Reversible synchronous
Ambient temperature operation	˚C	-15...+55
Ambient temperature storage	˚C	-20...+100
Thermal class	˚C	105
Motor speed	rpm	250 @ 50 Hz
Life expectancy		3 years in continuous operation
Mounting		any position
Standard motor voltages	V	12, 24, 48, 110, 220* & 240* (others on request)
HVT		2.0 KV (motor voltage>40V) or 0.6 KV (motor voltage<40V) for 1 min.
Weight	gm	65
Rotor stalling		Motor can be stopped when voltage is applied, without being overheated
Rotor shaft		Hardened steel, ground and polished
Bearings		Sintered bronze,self-lubricating
External dimensions		dia. 36 x 21 mm

RS, Professionally Approved Products, gives you professional quality parts across all products categories. Our range has been testified by engineers as giving comparable quality to that of the leading brands without paying a premium price.

ENGLISH

Techinical data

Rated voltage V_N	V	12	24	48	110	220*	240*
Operation capacitor (50 Hz)C_N	µF/VAC	10/20	3.3/50	0.82/100	0.15/200	With add on units	
Operation capacitor (60 Hz)C_N	µF/VAC	10/20	3.3/50	0.82/100	0.15/200		
Lead colour (V_N)		Grey	Blue	Brown	White	Yellow	
Tolerance of voltage	%	-10... +15% of rated voltage					
Duty cycle	%	100					
Rated frequency	**Hz**			**50**		**60**	
Power output at rated voltage	W			0.13		0.15	
Speed	rpm			250		300	
Running torque at rated voltage	gm-cm			50		48	
Power consumption at rated voltage	W			1.5		15	
Detent torque	gm-cm	15					

Connection Diagram

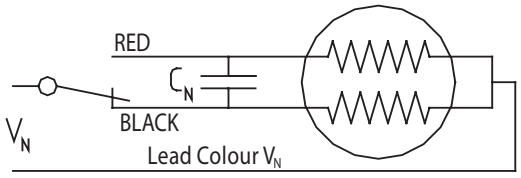

Add on units for 220* & 240* V

220….240 V (V_N motor 110V)

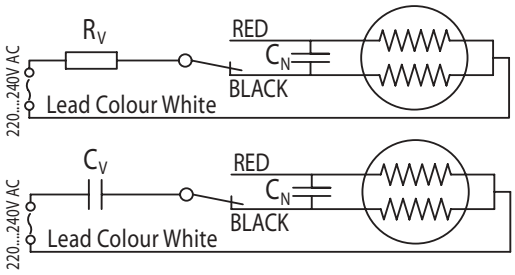

Unit	220V	240V
R_N (1.5W) 50/60Hz	8.2 KΩ	10 KΩ
C_N (200 VAC) 50 Hz	0.18 µF	0.15 µF
C_N (200 VAC) 60 Hz	0.15 µF	0.12 µF

Motor Drawing

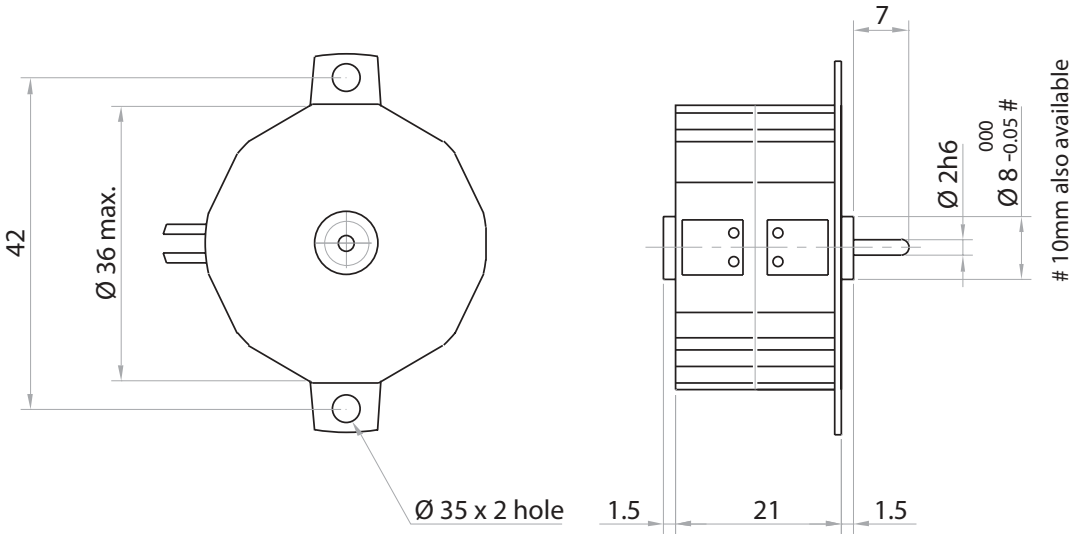

RS, Professionally Approved Products, gives you professional quality parts across all products categories. Our range has been testified by engineers as giving comparable quality to that of the leading brands without paying a premium price.