Features

- High-Speed Steel (HSS) ensures excellent hardness and wear resistance.
- Suitable for a wide range of materials, including mild steel, stainless steel, cast iron, and aluminum.
- Bright Finish: Smooth, polished surface for easier chip removal and effortless handling
- Compatible with common drill chucks and machines.

RS PRO HSS Centre Drill

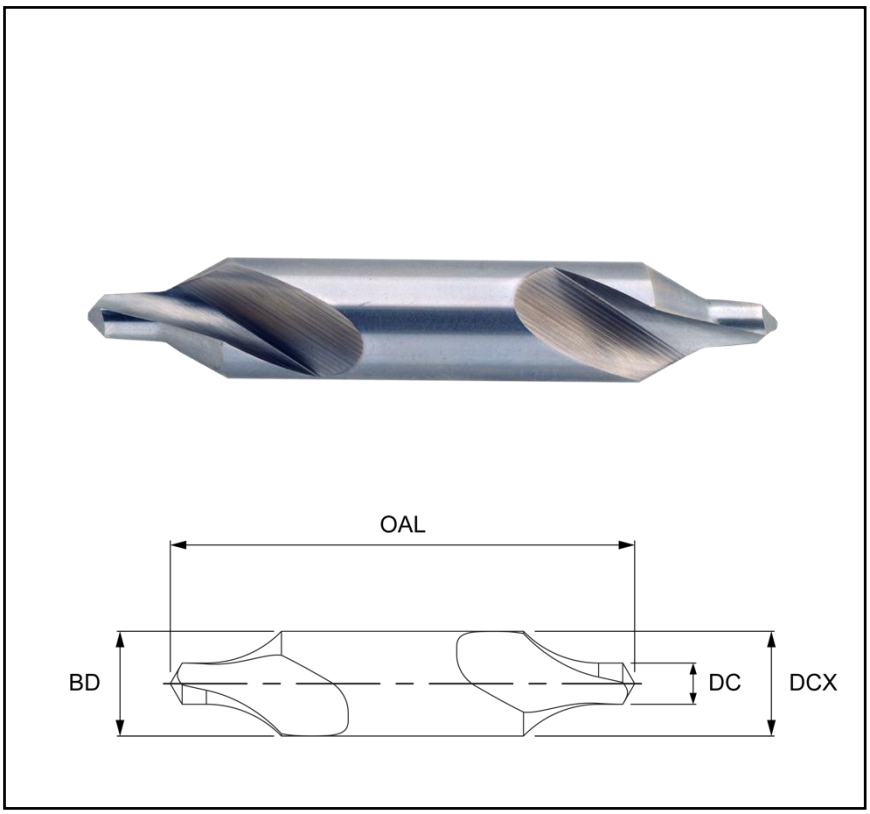

RS Professionally Approved Products bring to you professional quality parts across all product categories. Our product range has been tested by engineers and provides a comparable quality to the leading brands without paying a premium price.

Product Description

The RS Pro HSS Centre Drill is designed for precision and reliability in all drilling tasks. Made from high speed steel with a bright finish, it delivers excellent hardness, long lasting performance and smooth chip removal. Ideal for mild steel, stainless steel, cast iron and aluminium.

General Specifications

Brand	RS PRO
Material	High Speed Steel (HSS)
Drill Bit Size	3/64” – 1/4"
Product Type	Drill Bit
Overall Length	1.1/2” – 3”mm
Shank Diameter	1/8” – 5/8”
Cut Length	5/64” – 3/8”
Number of Pieces	1
Drill Bit Type	Centre Drill
Drill Application	Steel Stainless steel Cast iron Aluminium Plastics, acrylics

Mechanical Specifications

Cutter Diameter	DC– See table below and detailed image below
Cut Length	DCX – See table below and detailed image below
Number of Flutes	2
Overall Length	OAL – See table below and detailed image below
Shank Type	Straight / Cylindrical Shank
Shank Diameter	BD – See table below and detailed image below
Centre Cutting	Yes

Approvals

Declarations	N/A
Hazardous Area Certification	N/A
Standards Met	BSG BS 328

Stock No.	Brand	Product Name	Pilot Dia DC	Body Dia BD & DCX	O/All OAL	Pilot Length Max	Pilot Length Min
XXX-XXXX 905579	RS PRO	BS2	3/64"	1/8"	1.1/2"	5/64"	1/16"
XXX-XXXX 905580	RS PRO	BS1	1/16"	3/16"	1.3/4"	3/32"	5/64"
XXX-XXXX 905581	RS PRO	BS3	3/32"	1/4"	2"	5/32"	1/8"
XXX-XXXX 905582	RS PRO	BS4	1/8"	5/16"	2.1/4"	3/16"	5/32"
XXX-XXXX 905583	RS PRO	BS5	3/16"	7/16"	2.1/2"	9/32"	1/4"
XXX-XXXX 905584	RS PRO	BS6	1/4"	5/8"	3"	3/8"	5/16"

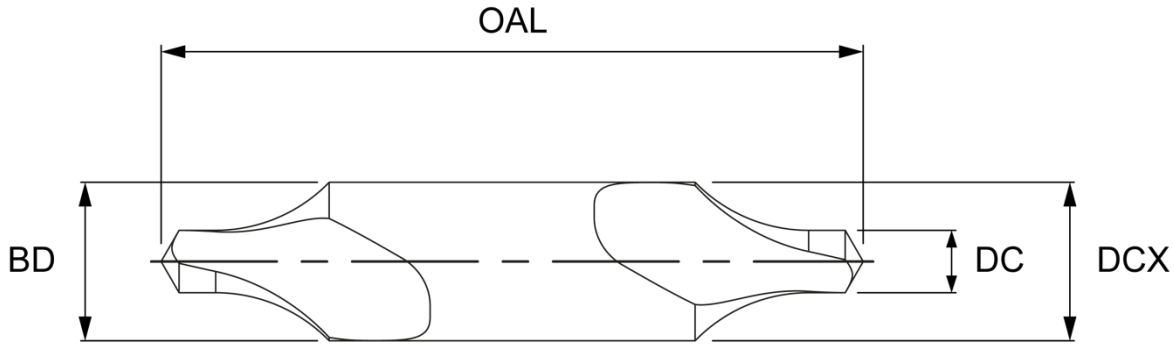

Cutting Data

VDI MATERIAL GROUP			HRc	v_c (m/min)	f_n (mm/rev)													
					ø1.0 -1.9	ø2.0 -2.9	ø3.0 -3.9	ø4.0 -4.9	ø5.0 -5.9	ø6.0 -6.9	ø7.0 -7.9	ø8.0 -9.9	ø10.0 -11.9	ø12.0 -13.5	ø14.0 -15.5	ø16.0 -17.5	ø18.0 -19.5	ø20.0
P	1-5	Non-alloy Steel	<25	20 (25-25)	0.01	0.025	0.05	0.055	0.063	0.08	0.10	0.13	0.145	0.16	0.18	0.20	0.23	0.24
P	6-9	Low alloy Steel	25-35	18 (15-20)	0.009	0.02	0.045	0.05	0.06	0.075	0.095	0.125	0.14	0.15	0.17	0.21	0.22	0.23
M	12-13	Stainless Steel		8 (6-10)	0.01	0.025	0.05	0.055	0.063	0.08	0.10	0.13	0.145	0.16	0.18	0.20	0.23	0.24
K	15-16	Grey Cast Iron		8 (6-10)	0.01	0.025	0.05	0.055	0.063	0.08	0.10	0.13	0.145	0.16	0.18	0.20	0.23	0.24
N	21-24	Aluminium Si<12%		40 (40-45)	0.02	0.038	0.063	0.07	0.076	0.12	0.16	0.18	0.20	0.225	0.25	0.275	0.30	0.325
N	29.1	Plastics, Acrylics		18 (15-20)	0.01	0.025	0.05	0.055	0.063	0.08	0.10	0.13	0.145	0.16	0.18	0.20	0.23	0.24