Toothed belt axes ELGD-TB

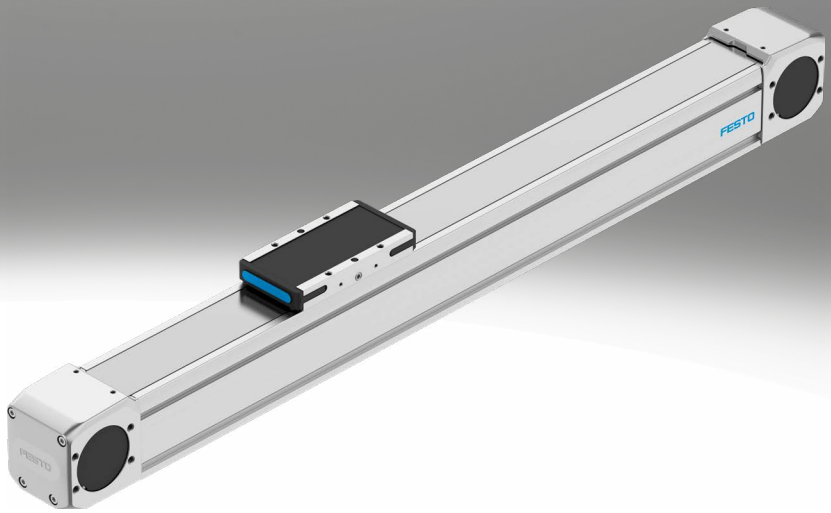

Key features

At a glance

ELGD-TB (standard design)
- Profile with a square cross section and sturdy drive elements for high feed forces
- With NSF-H1 lubricant for the food zone
- Suitable for the production of Li-ion batteries

ELGD-TB-WD (wide design)
- Reduced profile height offers smaller installation dimensions for handling systems and applications that do not require such high feed forces
- 30% lighter, while rigidity and guide load capacity are still similar to the axis in the standard design
- With NSF-H1 lubricant for the food zone
- Suitable for the production of Li-ion batteries

Innovative guide technology
- Excellent rigidity and load capacity of the guide for greater loads in the same installation space
- Less vibration and smoother slide movement protect sensitive workpieces
- High speeds ensure short cycle times and a very long service life minimises downtime

Powerful drive elements
- High feed forces and acceleration for shorter process times
- Long service life and increased reliability reduce TCO

Innovative stainless steel cover strip solution
- Abrasion-free and clean surface protects workpieces from particles
- Minimised number of particles for use in cleanrooms
- Reduced ingress of dirt for use in harsh ambient conditions

Options:
- Extended or additional slide for higher axial and lateral torques and higher loads
- Two freely selectable motor positions at one end of the axis

Sealing air connection:
- Air is exchanged between the interior of the cylinder and the environment via the sealing air connection. This prevents negative pressure or excess pressure from building up inside the cylinder.
- Application of slight negative pressure prevents the emission of particles
- Application of slight excess pressure prevents the ingress of particles

Guide axis ELFD

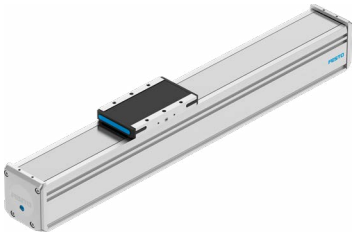

- Driveless linear guide units with guide and freely movable slide
- The guide axis is designed to support forces and torques in multi-axis applications

Key features

Engineering tools

More information ➔ electric-motion-sizing

Save time with smart engineering tools for the optimal solution. Our goal is to increase your productivity. Our engineering tools play an integral part in achieving this goal. They help you size your system correctly, tap into unimagined productivity reserves and generate additional productivity along the entire value chain. In every phase of your project, from the initial contact to the modernisation of your machine, you will come across a number of different tools and useful tools.

Electric Motion Sizing

- Create the optimum drive package quickly and reliably. Electric Motion Sizing calculates suitable combinations of electric axis, electric motor and servo drive using just a few application details. It provides you with all the relevant data including the bill of materials and documentation for the selected combination. This avoids design errors and results in significantly improved energy efficiency for the system. A smooth connection to the Festo Automation Suite also makes commissioning easier for you.

Graphs

More information ➔ elgd-tb

The graphs shown in this document are also available online. These can be used to display precise values.

Orientation guide

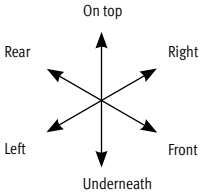

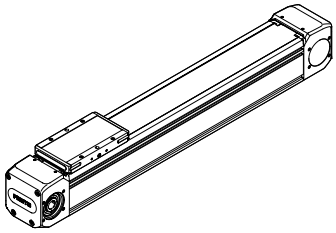

- The side on which the labelling is applied is defined as the front.

Drive system

[TB]	Toothed belt

- For applications requiring a high dynamic response and short positioning times
- For long strokes

Stroke reserve

- The stroke reserve is a safety distance from the mechanical end position and is not used in normal operation.
- The sum of the stroke length and 2x stroke reserve must not exceed the maximum working stroke.

Key features

Slide design

[ ] Standard

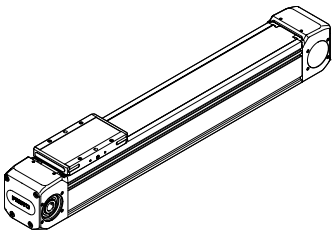

[L] Long

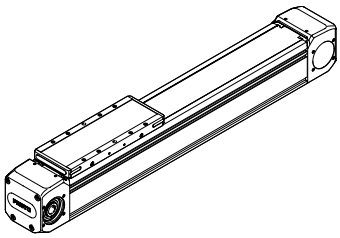

Additional slide

[ZL] Left

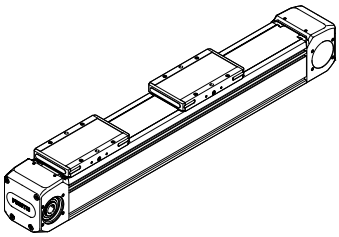

[ZR] Right

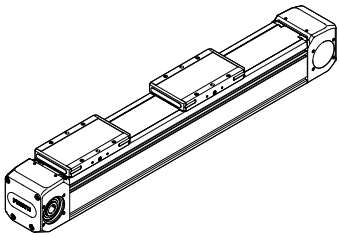

- The side on which the labelling is applied is defined as the front.
- The additional slide is always a standard slide

Speed

[ ] Standard

- Max. speed up to 3 m/s

[S1] High speed (Level 1)

- Max. speed up to 5 m/s

[S2] High speed (Level 2)

- Max. speed up to 10 m/s (without cover strip)

Lubrication

[ ] Standard

- With lifetime lubrication (this applies under standard conditions. Please refer to the operating manual for maintenance intervals for specific applications)
- Lubrication nipple not included in delivery

[GN] Lubrication nipple

- The lubrication adapters enable the guide to be permanently lubricated using semi- or fully automatic relubrication devices
- The adapters are suitable for oils and greases

Type of mounting

[M] Direct mounting

- When direct mounting is selected, the axis is supplied with threads in the underside of the profile. It can then be mounted without profile mountings, which saves space
- Additional centring holes make it easy to install the axis in the machine

Key features

Measurement system

[M3] With displacement encoder

The position of the slide can be sensed directly when using the incremental displacement encoder. This means that all elasticities of the drivetrain can be detected and corrected by the motor controller

Toothed belt material

[PU2] Coated PU

- With steel reinforcements for high rigidity
- Fabric coating for a long service life and low abrasion
- Polyurethane material for resistance to many cooling lubricants

[PU1] Uncoated PU, FDA-conform

- With steel reinforcements for high rigidity
- Blue, FDA-conform polyurethane for use in the food industry

Motor attachment

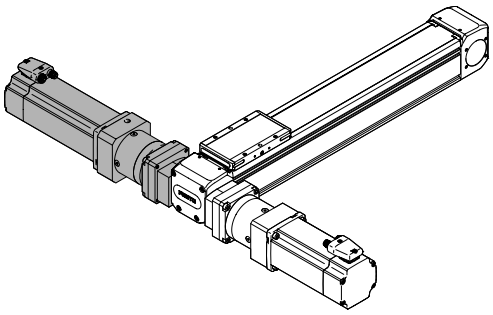

- The motor can be attached to the left end of the axis at the front or rear.
- The position of the motor does not have to be specified when ordering and can be changed later
- Note: Unlike other axes from Festo, the motor cannot be mounted on both ends of the axis. However, the axis has a symmetrical design so that the left end can also be rotated to the right (does not apply in conjunction with ELGD-...-M, for direct mounting)

Type codes

001	Series	
ELGD	Gantry axis	

002	Drive system	
TB	Toothed belt	

003	Guide	
KF	Recirculating ball bearing guide	

004	Size	
60	60	
80	80	
120	120	

005	Stroke [mm]	
200	200	
300	300	
500	500	
600	600	
800	800	
1000	1000	
1200	1200	
1500	1500	
1800	1800	
2000	2000	
...	50 ... 8500	

006	Stroke reserve	
0H	None	
...H	0 ... 999 mm	

007	Slide design	
	Standard	
L	Slide, long	

008	Additional slide	
	None	
ZL	1 slide left	
ZR	1 slide right	

009	Lubrication	
	Standard	
GN	Lubrication nipple	

010	Type of mounting	
	Profile slots with clamping jaws	
M	Direct mounting	

011	Displacement encoder	
	None	
M3	With displacement encoder, incremental, resolution 2.5 µm, 10... 30 V	

012	Displacement encoder attachment position	
	None	
B	Rear	
F	Front	

013	Material of toothed belt	
PU1	Uncoated PU, FDA-compliant	
PU2	Coated PU	

Datasheet

General technical data				
Size		60	80	120
Design		Electromechanical axis with toothed belt		
Guide		Recirculating ball bearing guide		
Mounting position		Any		
Working stroke				
ELGD-...	[mm]	50 ... 8500	50 ... 8500	50 ... 8500
ELGD-...-M	[mm]	50 ... 1400	50 ... 1400	50 ... 1400
ELGD-...-L-M	[mm]	50 ... 1400	50 ... 1400	50 ... 1370
Max. feed force F_x	[N]	350	800	1300
Max. no-load torque1)				
ELGD-...-PU1	[Nm]	0.5	1	1.5
ELGD-...-PU2	[Nm]	0.5	1.2	2
Max. no-load resistance to shifting1)	[N]	29.8	55.8	71.8
Max. driving torque	[Nm]	5.5	17.2	36.2
Maximum driving torque in parallel operation[2)]	[Nm]	11	26	60
Max. speed				
ELGD-...	[m/s]	3		
ELGD-...-S1	[m/s]	5		4.5
ELGD-...-S2-P0[3)]	[m/s]	10		
Max. acceleration				
ELGD-...-PU1	[m/s²]	50		
ELGD-...-PU2	[m/s²]	100		
Repetition accuracy	[mm]	±0.04		
Position sensing		For inductive sensors		

1) At 0.2 m/s
2) With connecting shaft KSK
3) Without cover strip

Weight [g]						
Size	60		80		120	
Slide design		L		L		L
Basic weight with 0 mm stroke1)	2486	2909	4715	6030	10425	13075
Additional weight per 10 mm stroke	49	49	79	79	116	116
Moving mass	490	710	1110	1810	1733	3179

1) Including slide

Toothed belt				
Size		60	80	120
Pitch	[mm]	3	5	5
Effective diameter	[mm]	31.51	42.97	55.7
Feed constant	[mm/rev]	99	135	175

Homing

Homing can be carried out in two ways:

- Against a fixed stop
- Using a reference switch

The following values must be observed:

Size		60	80	120
Max. impact energy	[mJ]	0.125	0.25	1
Note on the impact energy in the end positions	[m/s]	At maximum homing speed of 0.01 m/s		

Datasheet

Operating and environmental conditions		
Ambient temperature1)	[°C]	0 ... +60
Storage temperature	[°C]	–20 ... +60
Degree of protection		IP40
Duty cycle	[%]	100
Suitable for cleanrooms, measured according to ISO 14644-14		ISO class 4
Maintenance interval2)		Lifetime lubrication

1) Observe the operating range of the proximity switches. The feature ELGD-...-S2 (speed level 2) may only be used in the range 0 ... 40 C°.
2) This information applies under standard conditions. Please refer to the operating manual for maintenance intervals for specific applications.

Cleanroom suitability

The axis ELGD is designed for cleanroom applications and tested under typical operating conditions. The ISO class is determined using standardised testing procedures in which particle emissions are measured for several hours until stable values are reached. The classification of the cleanroom class is carried out according to ISO 14644 14 using reliable statistical methods. The tests are carried out with 100% duty cycle. The ISO class is determined over a period of 100 minutes to obtain reliable performance data.
The standard grease used in the ELGD has a low particle emission and is therefore well suited for cleanroom applications.
Our engineering team can carry out a detailed assessment for applications with specific cleanroom requirements and recommend an optimal configuration that is tailored to your process.

Size	60	80	120
Suitable for cleanrooms, measured according to ISO 14644-14	ISO class 4 (vacuum)[2)] ISO class 6		

1) In order to achieve the required ISO class, the axis must be cleaned and correctly prepared before commissioning.

ISO class			4			5				6				7				
Speed		[m/s]	0.1	0.5	1	0.1	0.5	1	1.5	0.1	0.5	1	1.5	0.1	0.2	0.5	1	1.5
	For size																	
Required vacuum flow rate2)	60	[l/min]	0	50	**	0	30	50	30	0	0	10	10	0	0	0	*	*
	80	[l/min]	0	30	50	0	10	10	50	0	0	0	0	0	0	0	10	*
	120	[l/min]	10	30	*	0	10	30	30	0	*	10	*	0	*	0	0	0

* Not measured
** Not reached
2) A vacuum needs to be connected to both end caps to achieve the maximum suction power with the toothed belt axes.

Datasheet

Mass moments of inertia							
Size		60		80		120	
Slide design			L		L		L
J_0	[kg mm²]	210.16	267.49	752.16	1056.47	3021.36	4163.24
J_H per metre stroke	[kg mm²/m]	31.28	31.28	112.63	112.63	279.2	279.2
J_L per kg effective load	[kg mm²/Kg]	248.22	248.22	461.61	431.61	775.62	775.62

The mass moment of inertia J_A of the entire axis is calculated as follows:

$$J_A = J_0 + J_H \times \text{working stroke [m]} + J_L \times m_{\text{effective load}} \text{ [kg]}$$

Materials

Axis	
Drive cover	Gravity die-cast aluminium, painted
Slide	
ELGD-...	Die-cast aluminium
ELGD-...-L	Wrought aluminium alloy
Cover strip	High-alloy stainless steel
Toothed belt	
ELGD-...-PU2	Polyurethane with steel cord and nylon cover
ELGD-...-PU1	Polyurethane with steel cord
Guide	Steel
Profile	Anodised wrought aluminium alloy
Belt pulley	High-alloy stainless steel
Note on materials	RoHs-compliant
LABS (PWIS) conformity	VDMA24364-C1-L
Suitable for the production of Li-ion batteries	Suitable for battery production with reduced Cu/Zn/Ni values (F1a)

Technical data – Displacement encoder		
Type		ELGD-...-M3
Resolution	[µm]	2.5
Max. travel speed with displacement encoder	[m/s]	7
Supply voltage	[VDC]	10 – 30 (±10%)
Current	[mA]	Max. 150
Encoder signal		5 V TTL; A/A, B/B; reference signal (N/N) cyclically every 5 mm (zero pulse)
Signal output		Line driver, alternating, resistant to sustained short circuit
Electrical connection		8-pin plug connector, round design, M12
Cable length	[mm]	160

Operating and environmental conditions – Displacement encoder		
Ambient temperature	[°C]	–10 ... +70
Degree of protection		IP64
CE marking (see declaration of conformity)		To EU EMC Directive[1])

1) For information about the area of use, see the EC declaration of conformity at: www.festo.com/sp ➔ Certificates.
If the devices are subject to usage restrictions in residential, commercial or light-industrial environments, further measures for the reduction of the emitted interference may be necessary.

Datasheet

Load values

The indicated forces and torques refer to the centre of the guide. The point of application of force is the point where the centre of the guide and the longitudinal centre of the slide intersect. The appropriate size is selected using the following three steps:
1. Check the maximum permissible values (must not be exceeded)
2. Calculate the load comparison factor
3. Determine the service life

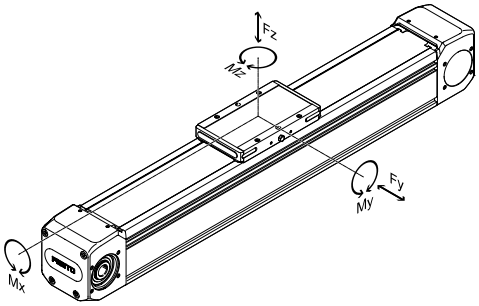

Distance from the slide surface to the centre of the guide

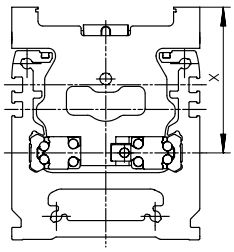

Distance from the slide surface to the centre of the guide				
Size		60	80	120
Dimension x	[mm]	49	62	80

1. Check the maximum permissible values

Max. permissible forces and torques for the overall axis (strength limits)							
Size		60		80		120	
Slide design			L		L		L
Max. force Fy, overall axis	[N]	1945	3890	2800	5500	2957	5914
Max. force Fz, overall axis	[N]	2000	3600	3500	5600	6500	9000
Max. torque Mx, overall axis	[Nm]	41	85	106	200	251	520
Max. torque My, overall axis	[Nm]	36	128	80	356	80	674
Max. torque Mz, overall axis.	[Nm]	36	133	79	383	105	527

Datasheet

Maximum permissible support spacing L as a function of force F

The axis may need to be supported in order to limit deflection in the case of long strokes.
The following graphs can be used to determine the maximum permissible support spacing L as a function of force F acting on the axis. The deflection is f = 0.5 mm.

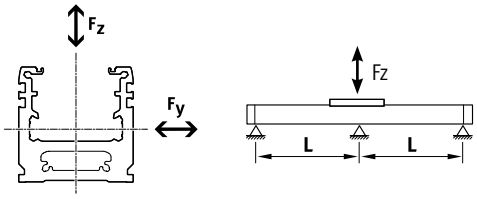

Size 60

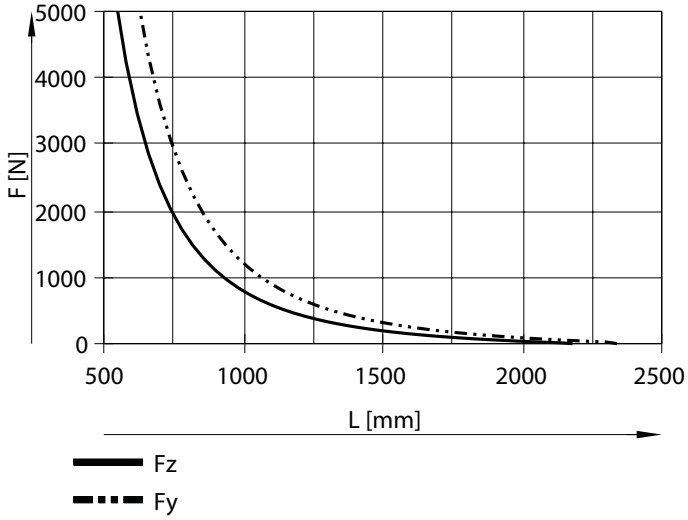

Size 80

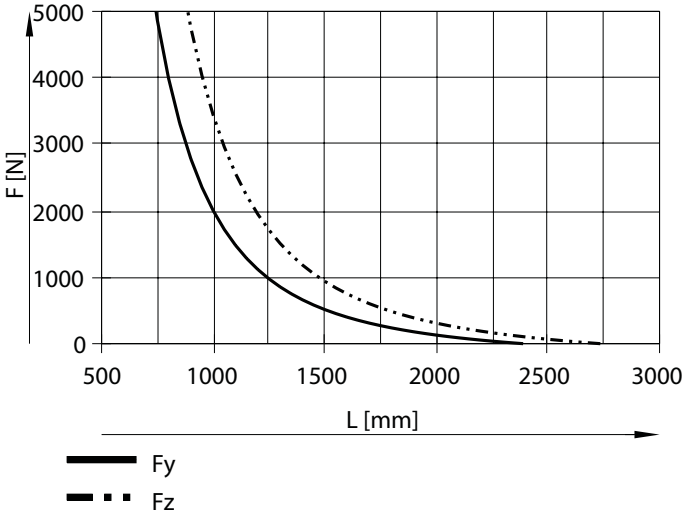

Size 120

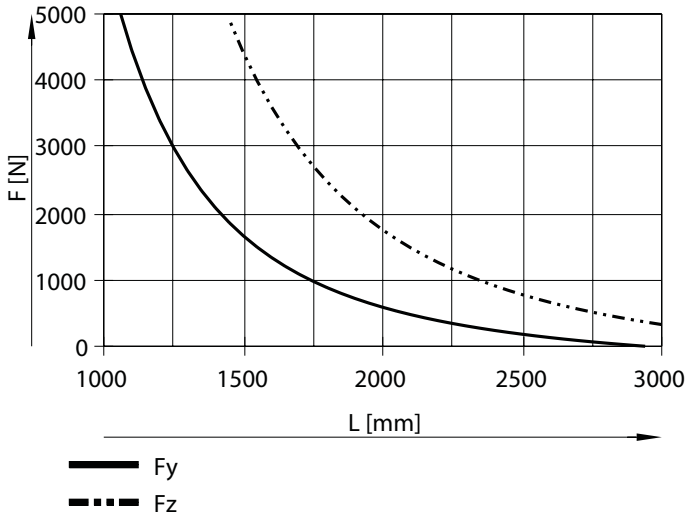

Datasheet

2. Calculate the load comparison factor

Note

For a guide system to have a service life of 5000 km, the load comparison factor must have a value of fv š 1, based on the maximum permissible forces and torques for a service life of 5000 km.
This formula can be used to calculate a guide value.
The engineering software "Electric Motion Sizing" is available for more precise calculations
➔ www.festo.com/x/electric-motion-sizing

If the axis is subjected to several of the indicated forces and torques at the same time, the following equation must be satisfied in addition to the indicated maximum loads:
Calculating the load comparison factor:

$$f_v = \frac{|F_{y1}|}{F_{y2}} + \frac{|F_{z1}|}{F_{z2}} + \frac{|M_{x1}|}{M_{x2}} + \frac{|M_{y1}|}{M_{y2}} + \frac{|M_{z1}|}{M_{z2}} \leq 1$$

F_1/M_1 = Values occurring in the application
F_2 = Permissible values at 5000 km from the graph "load as a function of support spacing"
M_2 = Maximum permissible values (see table)

Max. permissible torques for the guide calculation with reference service life

Size		60		80		120	
Slide design			L		L		L
Reference service life	[km]	5000					
Max. torque Mx	[Nm]	38	75	106	200	170	350
Max. torque My	[Nm]	15	150	42	390	50	620
Max. torque Mz	[Nm]	15	140	42	390	60	580

Permissible guide load as a function of the support spacing

Depending on how firmly the axis is supported, the maximum permissible forces vary due to the design of the guide system.
If the axis is used as a cantilever or in yoke operation, the values for a support spacing of 2000 mm can be selected.

Size 60

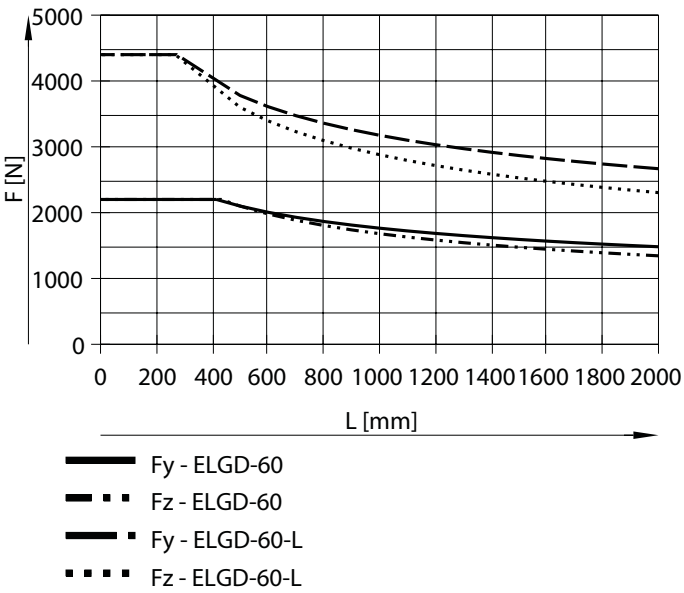

Size 80

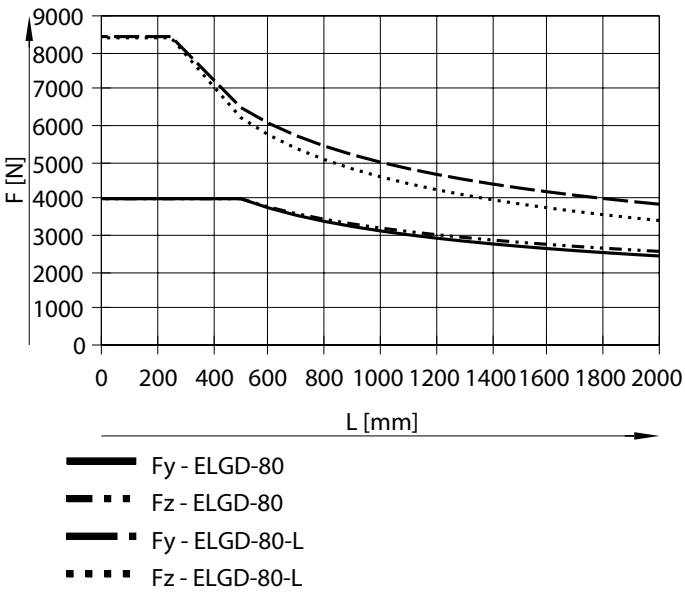

Datasheet

Permissible guide load as a function of the support spacing

Depending on how firmly the axis is supported, the maximum permissible forces vary due to the design of the guide system.
If the axis is used as a cantilever or in yoke operation, the values for a support spacing of 2000 mm can be selected.

Size 120

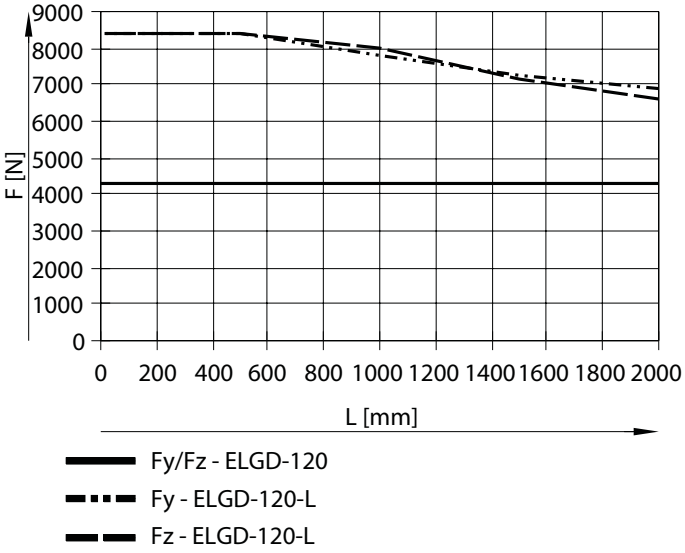

Datasheet

3. Determine the service life

The service life of the guide depends on the load. To be able to provide an indication of the service life of the guide, the graph below plots the load comparison factor fv against the service life.

These values are only theoretical. You must consult your local Festo contact for a load comparison factor fv greater than 1.3.

Load comparison factor f_v as a function of service life l

Example:
A user wants to move an x kg load. Using the formula (➔ page) gives a value of 1.3 for the load comparison factor f_v. According to the graph, the guide would have a service life of approx. 2500 km. Reducing the acceleration reduces the Mz and My values. A load comparison factor f_v of 1 now gives a service life of 5000 km.

Note:
If the application has been calculated using "Electric Motion Sizing", the average guide comparison figure represents the workload of the guide.
(100% average guide comparison figure corresponds to fv = 1). With this value, the service life can be estimated using the service life graph

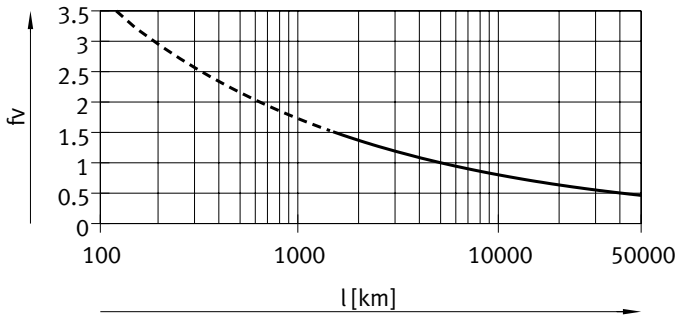

Comparison of the characteristic load values for 100 km with dynamic forces and torques of recirculating ball bearing guides

The characteristic load values of the bearing guides are standardised to ISO and JIS using dynamic and static forces and torques. These forces and torques are based on an expected service life of the guide system of 100 km to ISO or 50 km to JIS.
As the characteristic load values are dependent on the service life, the maximum permissible forces and torques for a 5000 km service life cannot be compared with the dynamic forces and torques of bearing guides to ISO/JIS.

To make it easier to compare the guide capacity of linear axes ELGD with bearing guides, the table below lists the theoretically permissible forces and torques for a calculated service life of 100 km. This corresponds to the dynamic forces and torques to ISO.
These 100 km values have been calculated mathematically and are only to be used for comparing with dynamic forces and torques to ISO. The drives must not be loaded with these characteristic values as this could damage the axes.

Max. permissible forces and torques for a theoretical service life of 100 km (from a guide perspective only)

Size		60		80		120	
Slide design			L		L		L
$Fy_{max.}$	[N]	9208	18415	17576	35153	17576	35153
Fz_{max}	[N]	9208	18415	17576	35153	17576	35153
$Mx_{max.}$	[Nm]	157	314	422	844	730	1459
$My_{max.}$	[Nm]	60	500	162	1356	162	1920
$Mz_{max.}$	[Nm]	60	500	162	1356	162	1920

Datasheet

Speed v as a function of rotational speed n

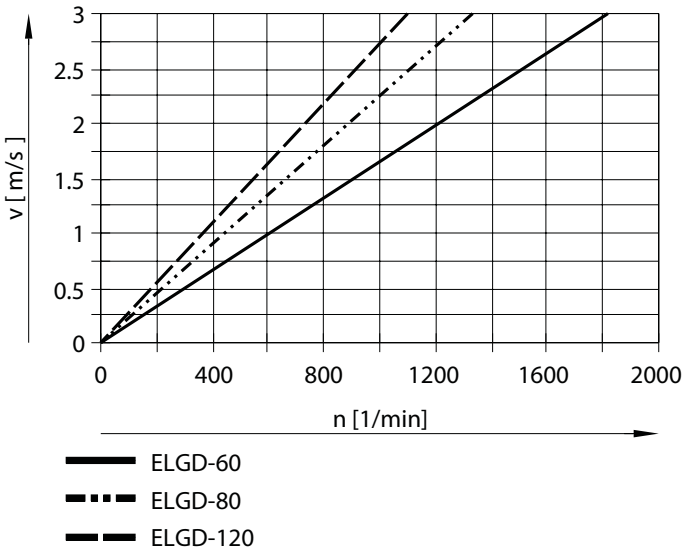

Note

Maximum speed can be found in the table “General technical data”

Feed force F as a function of input torque M

Size 60

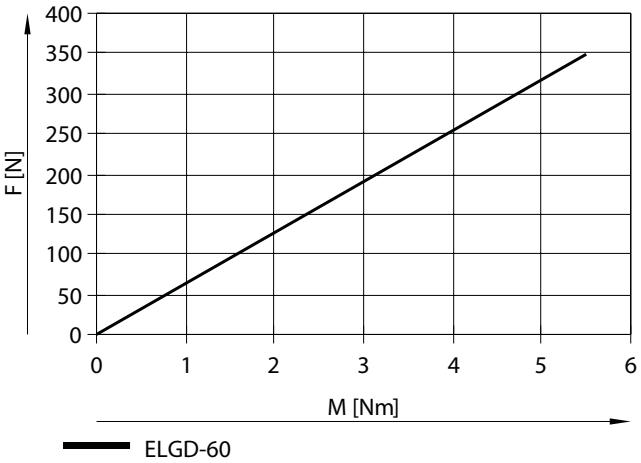

Size 80

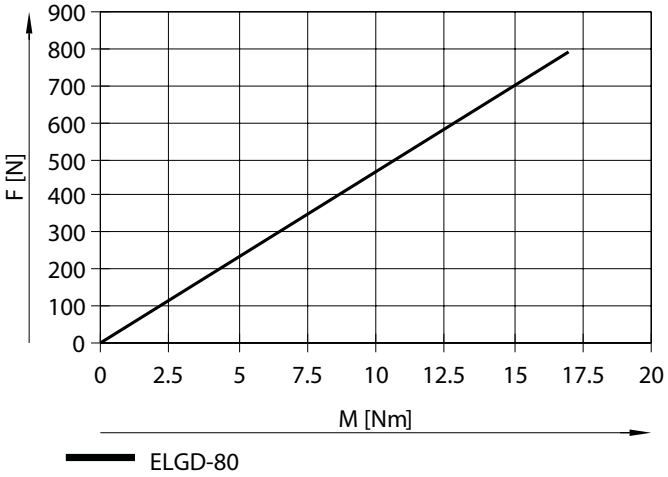

Size 120

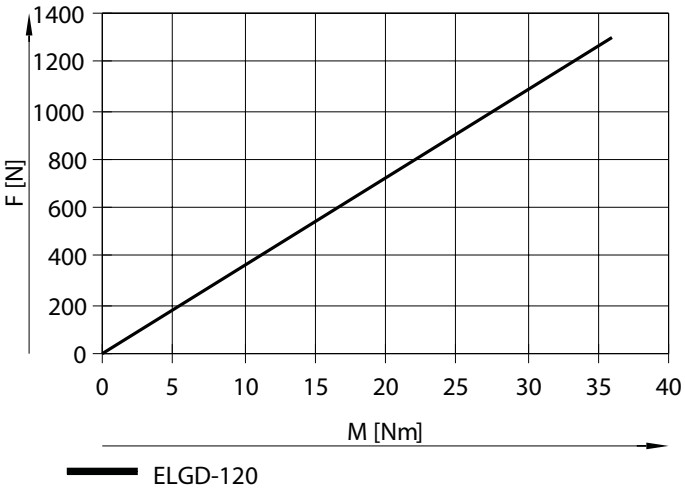

Datasheet

Second moment of area

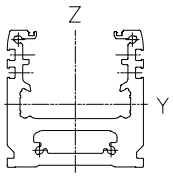

Size		60	80	120
Iy	[mm^4]	0.485x10^6	1.213x10^6	3.55x10^6
Iz	[mm^4]	0.731x10^6	2.052x10^6	8.985x10^6

Recommended deflection limit values

Adherence to the following limit values for deflection is recommended to ensure the continuing functionality of the axes. Greater deformation can result in increased friction, greater wear and reduced service life.

Size	Dynamic deflection (moving load)	Static deflection (stationary load)
60, 80, 120	0.05% of the axis length, max. 0.5 mm	0.1% of the axis length

Datasheet

Working stroke reduction

For axis ELGD with additional slide ZL/ZR

For a toothed belt axis with additional slide, the working stroke is reduced by the length of the additional slide and the distance between the two slides

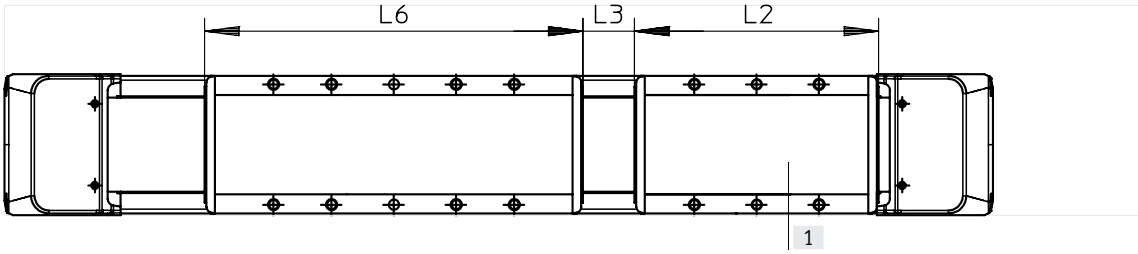

L6 =	Slide length	**Example:**
L2 =	Additional slide length	Type ELGD-TB-KF-60-500-...-ZR
L3 =	Distance between the two slides	Working stroke without Additional slide = 500 mm
[1]	Additional slide	L3 = 50 mm
		L2 = 118 mm
		Working stroke with additional slide = 332 mm (500 mm – 50 mm – 118 mm)

Dimensions – Additional slide

Size		60	80	120
Length L2	[mm]	118	142	162
Min. distance between the slides L3	[mm]	≥ 50	≥ 50	≥ 50

Datasheet

Dimensions – ELGD-TB-... Download CAD data ➔ www.festo.com

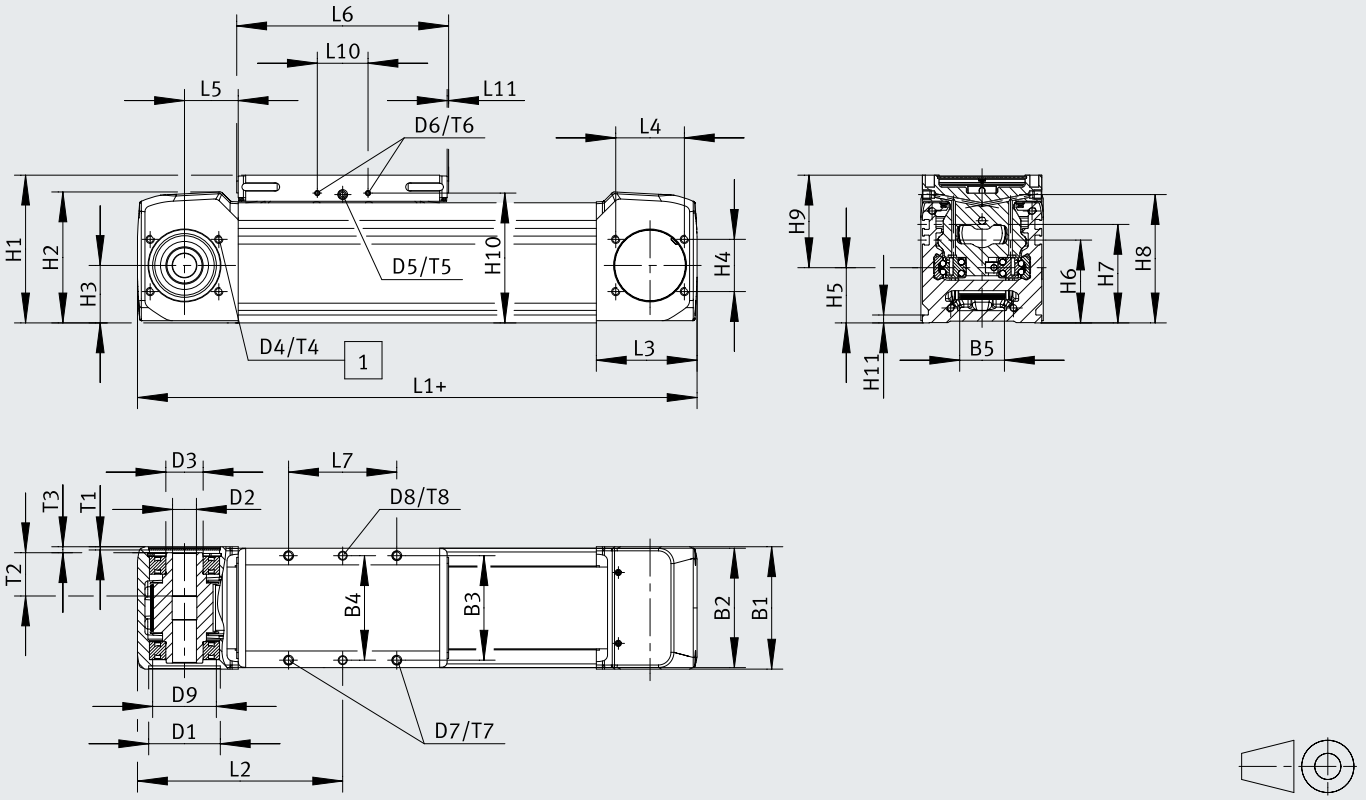

[1] Sealing air connection

+ = plus stroke length + 2x stroke reserve

Datasheet

	B1	B2	B3	B4 ±0.03	B5	D1 ⌀ H7	D2 ⌀ H7	D3 ⌀	D4	D5	D6	D7	D8 ⌀ H7	D9 ⌀	H1
ELGD-TB-60	62	60	52.5	52.5	20	48	16	25k5	M6	M6	M3	M5	5	37.3	82
ELGD-TB-80	82	80	70	70	30	48	16	25k5	M5	M6	M3	M6	6	42.7	99
ELGD-TB-120	123	120	107	107	40	80	23	45k6	M8	M6	M3	M6	6	68.7	126.5

	H2	H3	H4	H5	H6	H7	H8	H9	H10	H11	L1	L2 min.	L3	L4
ELGD-TB-60	71.4	34	26	33	50	–	70	49	71	5.3	251	125.5	68	51
ELGD-TB-80	87.6	38.5	35	37	55.5	66	86	62	87	5.3	275	137.5	67.5	46
ELGD-TB-120	115.7	53.4	59	46.5	81.5	92	113.5	80	113.5	5.3	356	178	100	76

	L5	L6	L7 ±0.1	L10	L11		T1	T2	T3	T4	T5	T6	T7	T8
					min.	max.								
ELGD-TB-60	35	118	50	34	1.5	4.5	2.2	26	4.2	12	6	7	16.5	6 ±0.05
ELGD-TB-80	36	142	72.5	34	1	4	2.2	29	4	12	6	7	17.5	8 ±0.05
ELGD-TB-120	50	162	92.5	34	3	6	3.5	29	4	16	6	7	17.5	8 ±0.1

Datasheet

Dimensions – ELGD-TB-...-L (with long slide) Download CAD data ➔ www.festo.com

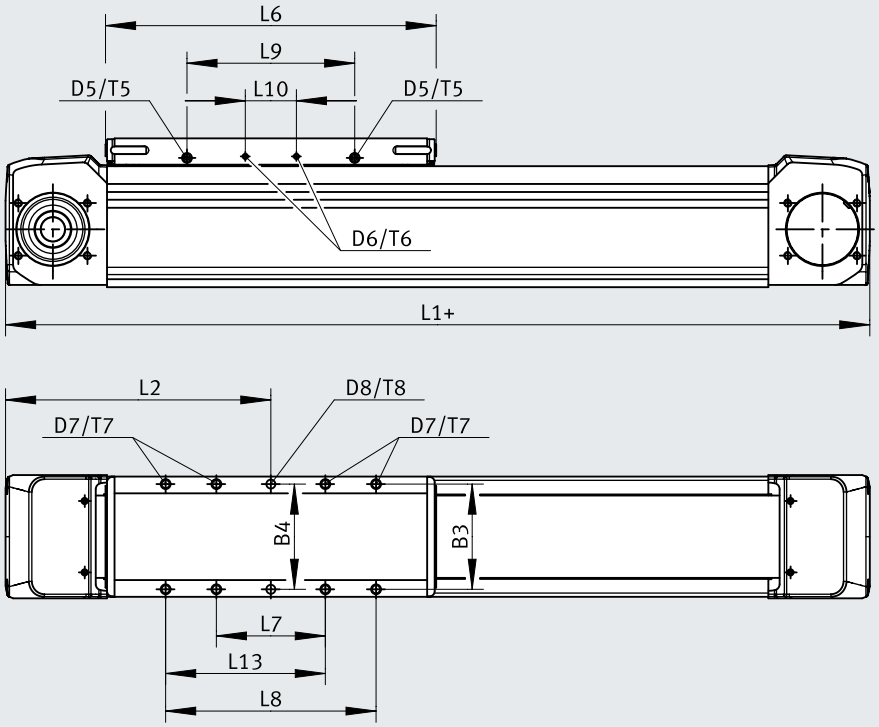

+ = plus stroke length + 2x stroke reserve

	B3	B4 ±0.03	D5	D6	D7	D8 ø H7	L1	L2 min.	L6
ELGD-TB-60-L	52.5	52.5	M6	M3	M5	5	292	146	159
ELGD-TB-80-L	70	70	M6	M3	M6	6	353	176.5	220
ELGD-TB-120-L	107	107	M6	M3	M6	6	457	228.5	263

	L7 ±0.1	L8 ±0.1	L9	L10	L13	T5	T6	T7	T8 ±0.05
ELGD-TB-60-L	50	95	81.2	34	72.5	6	7	16.5	6
ELGD-TB-80-L	72.5	140	111.6	34	106.3	6	7	17.5	8
ELGD-TB-120-L	92.5	132.5	161	34	112.5	6	7	17.5	8

Datasheet

Dimensions – ELGD-TB-...-ZL/-ZR (with additional slide) Download CAD data ➔ www.festo.com

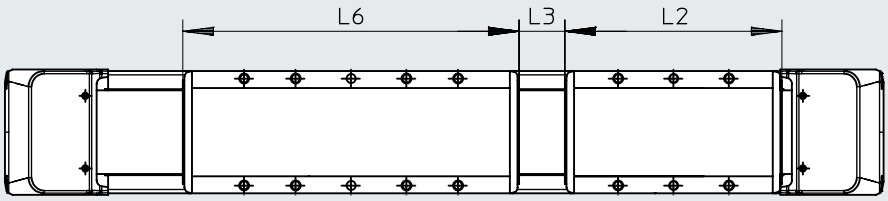

	L2	L3 (Minimum distance)	L6
ELGD-TB-60	118	50	118
ELGD-TB-80	142	50	142
ELGD-TB-120	162	50	162
ELGD-TB-60-L	118	50	159
ELGD-TB-80-L	142	50	220
ELGD-TB-120L	162	50	263

Dimensions – ELGD-TB-...- (profile) Download CAD data ➔ www.festo.com

ELGD-TB-KF-60 ELGD-TB-KF-80 ELGD-TB-KF-120

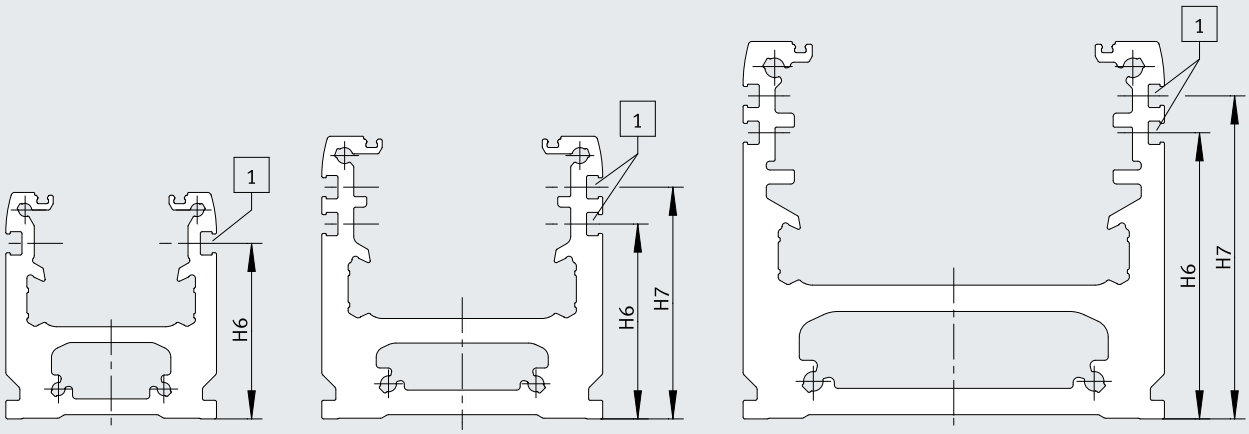

[1] Sensor slot for proximity switch

	H6	H7
ELGD-TB-60	50	–
ELGD-TB-80	55.5	66
ELGD-TB-120	81.5	92

Datasheet

Dimensions – ELGD-TB-...-M (for direct mounting) Download CAD data ➔ www.festo.com

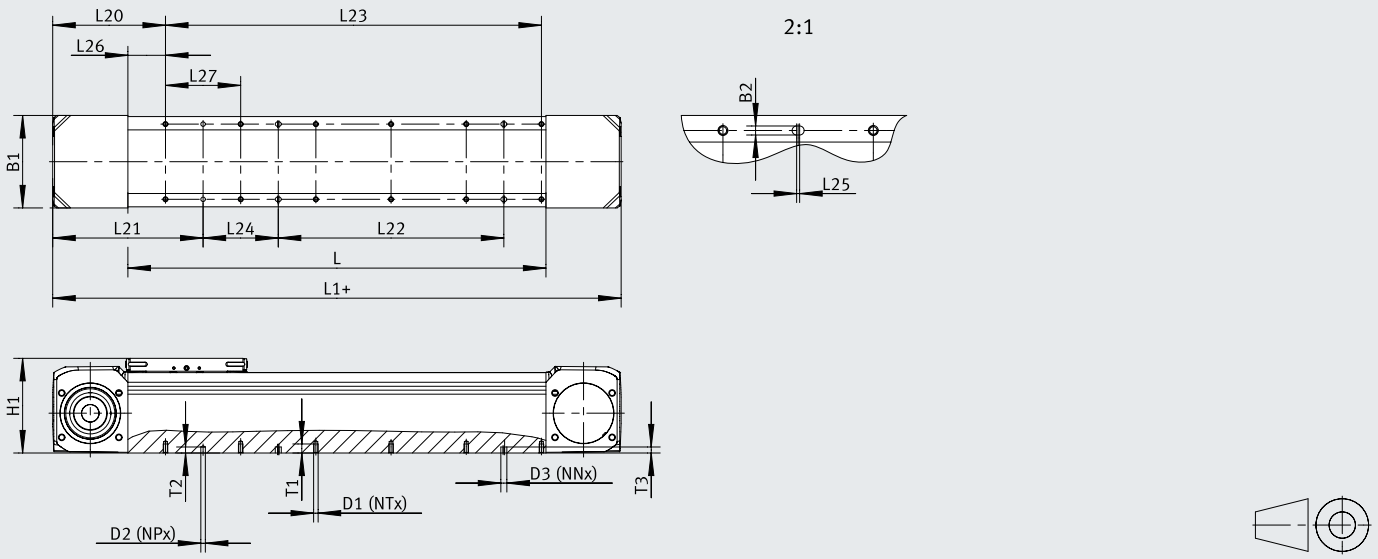

+ = plus stroke length + 2x stroke reserve
L23 = (NT/2-1) x 100

	B1	D1	D2 ⌀ H7	D3 H7	H1	L (with zero stroke length)	L20	L21
ELGD-TB-60-...-M	43	M5	6	6	81.4	115	118	168
ELGD-TB-60-...-L-M						156		
ELGD-TB-80-...-M	61	M6			98.4	140	117.5	167.5
ELGD-TB-80-...-L-M						218		
ELGD-TB-120-...-M	100	M6			125.9	156	150	200
ELGD-TB-120-...-L-M						257		

	L25	L26	L27	T1	T2	T3
ELGD-TB-60-...-M	2	50	100	10.5	8	8
ELGD-TB-60-...-L-M						
ELGD-TB-80-...-M				12.5		
ELGD-TB-80-...-L-M						
ELGD-TB-120-...-M				12.5		
ELGD-TB-120-...-L-M						

Datasheet

L	D1[1]		D2[2]	D3[3]		L24
	NT	L23	NP	NN	L22	
<270	4	100	2	–	–	–
≥270	6	200		2		100
≥370	8	300		4	100	
≥470	10	400			200	
≥570	12	500			300	
≥670	14	600			400	
≥770	16	700			500	
≥870	18	800			600	
≥970	20	900			700	
≥1070	22	1000			800	
≥1170	24	1100			900	
≥1270	26	1200			1000	
≥1370	28	1300			1100	
≥1470	30	1400			1200	
≥1570 ≤1650	32	1500			1300	

1) Threaded hole
2) Pin hole
3) Slotted hole

Datasheet

Dimensions – Profile mounting EAHF-E24-60-P (standard mounting) Download CAD data ➔ www.festo.com

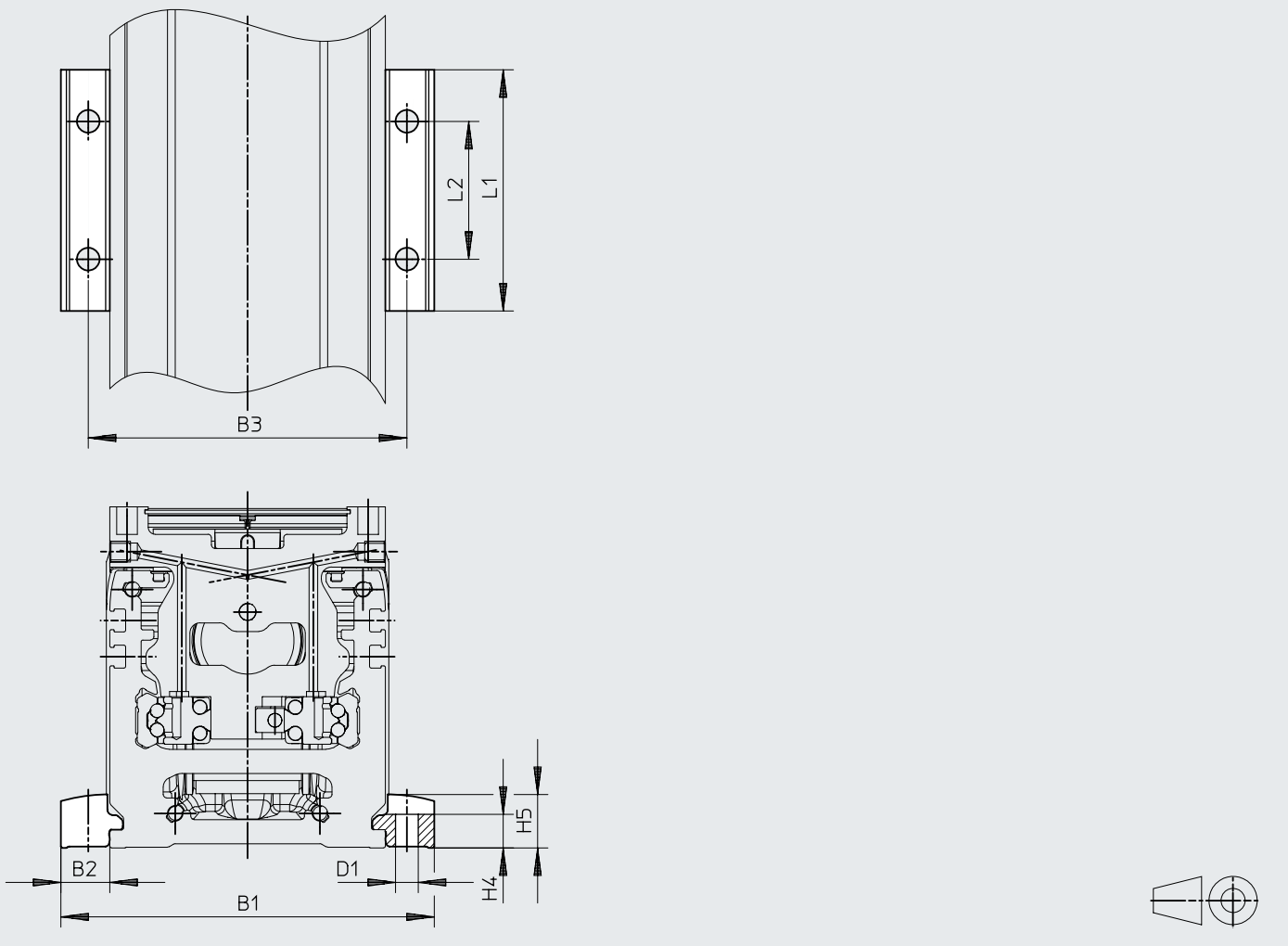

		B1	B2	B3	D1 ø H13	H4 ±0.1	H5	L1	L2
EAHF-E24-60-P	ELGD-TB-60	88.4	14.2	72.5	6.6	10.3	16.5	70	40
	ELGD-TB-80	108.4	14.2	92.5	6.6	10.3	16.5	70	40
	ELGD-TB-120	148.4	14.2	132.5	6.6	10.3	16.5	70	40

Datasheet

Dimensions – Profile mounting EAHF-E24-60-P-S Download CAD data ➔ www.festo.com

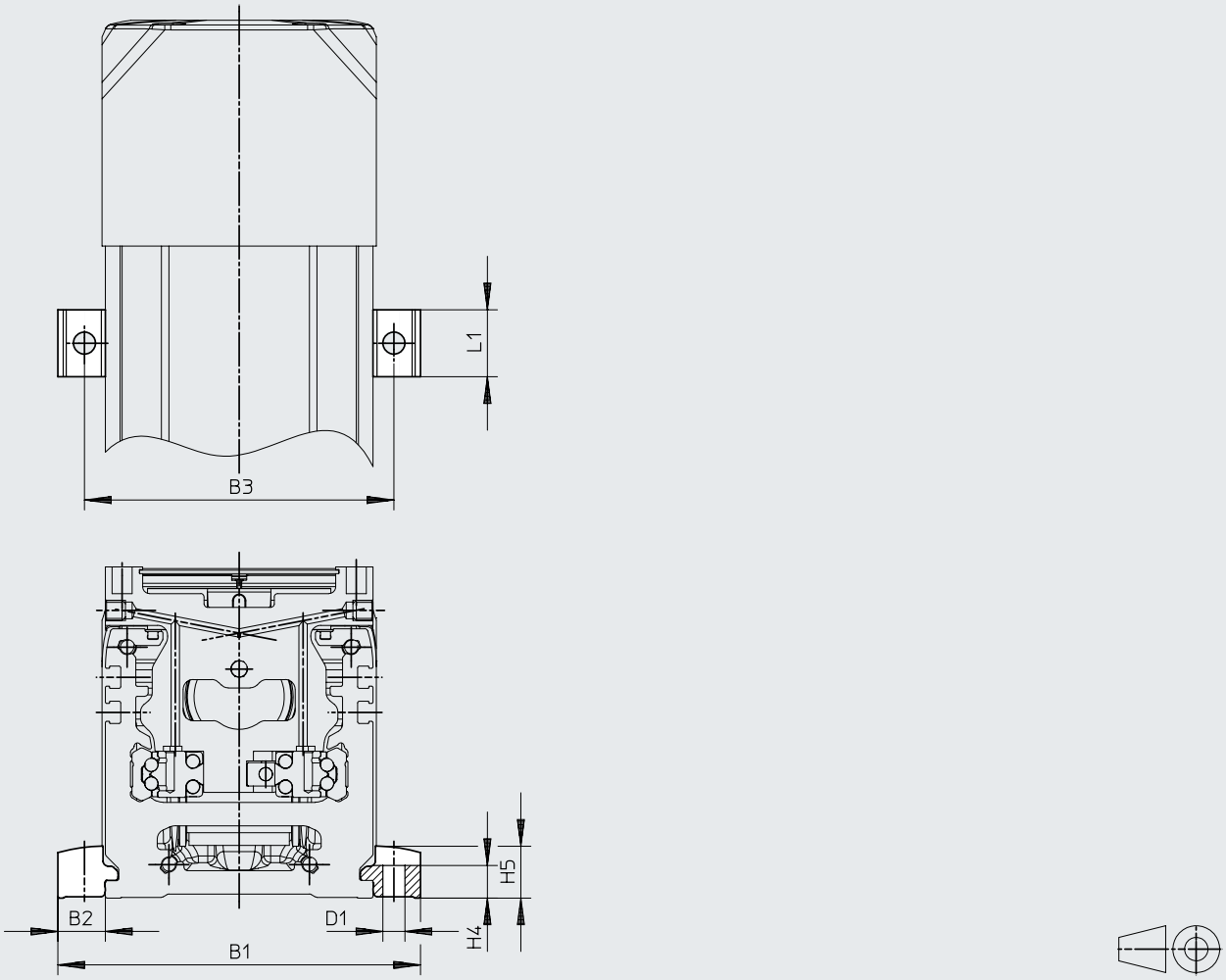

		B1	B2	B3	D1 ø H13	H4 ±0.1	H5	L1
EAHF-E24-60-P-S	ELGD-TB-60	88.4	14.2	72.5	6.6	10.3	16.5	20
	ELGD-TB-80	108.4	14.2	92.5	6.6	10.3	16.5	20
	ELGD-TB-120	148.4	14.2	132.5	6.6	10.3	16.5	20

Datasheet

Dimensions – Profile mounting EAHF-E24-60-P-D Download CAD data ➔ www.festo.com

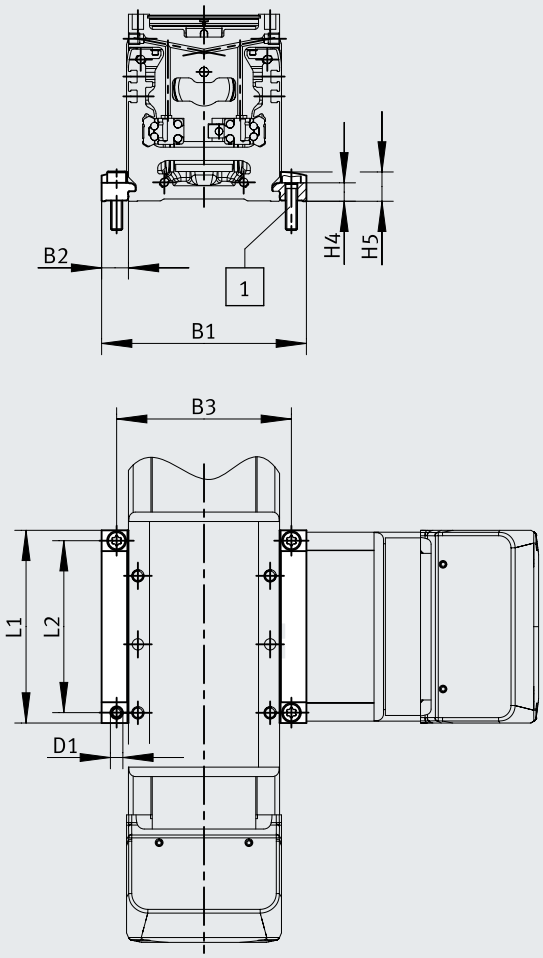

Note:
The profile mounting EAHF-E24-60-P-D... is designed for mounting axis ELGD on axis ELGD.

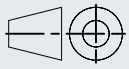

[1] Screws are included in the scope of delivery

		B1	B2	B3	D1 Ø H13	H4 ±0.1	H5	L1	L2
EAHF-E24-60-P-D5	ELGD-TB-60	88.4	14.2	72.5	5.5	10.3	16.5	62	52.5
EAHF-E24-60-P-D4	ELGD-TB-80	108.4	14.2	92.5	6.6	10.3	16.5	81	70
EAHF-E24-60-P-D7	ELGD-TB-120	148.4	14.2	132.5	6.6	10.3	16.5	120	107

Datasheet

Dimensions – Adjusting kit EADC-E16-... Download CAD data ➔ www.festo.com

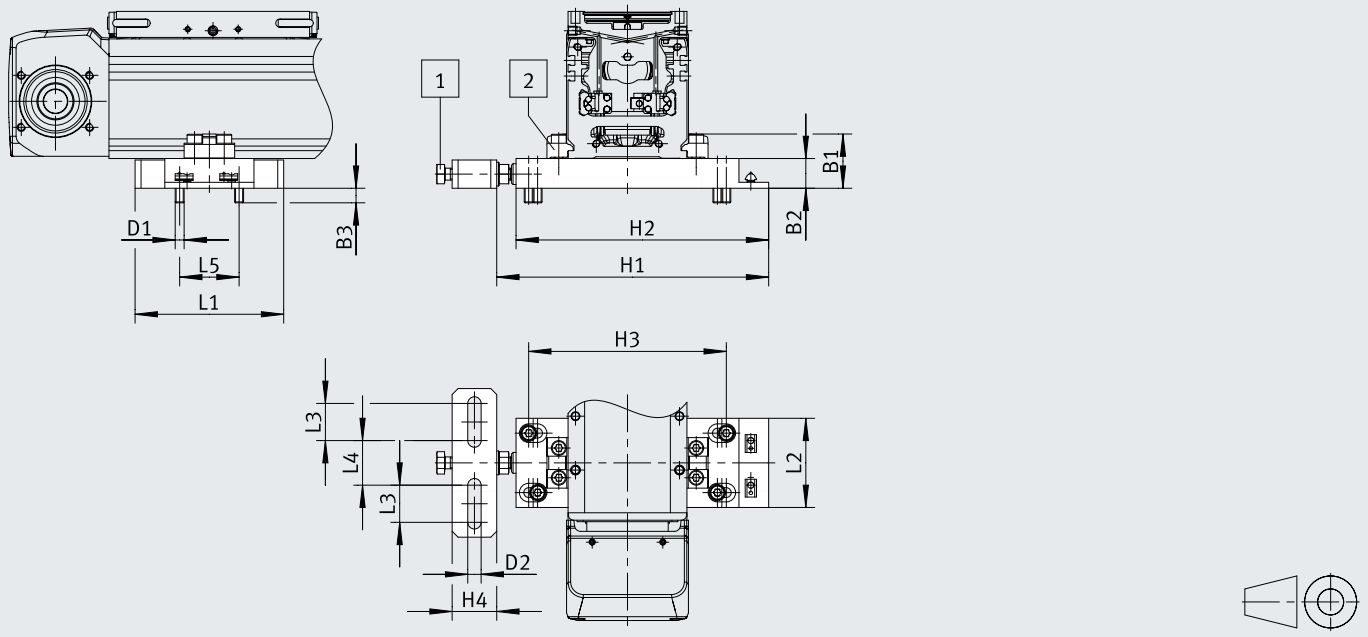

[1] M8 screw
[2] Profile mounting

		B1	B2	B3	D1	D2	H1	H2
EADC-E16-60-E24	ELGD-TB-60	36.5	20	9.8	M6	9	163	150
EADC-E16-80-E24	ELGD-TB-80		20				183	170
EADC-E16-120-E24	ELGD-TB-120		20				203	190

		H3		H4	L1	L2	L3	L4	L5
		min.	min.						
EADC-E16-60-E24	ELGD-TB-60	101	113	30	100	60	25	30	40
EADC-E16-80-E24	ELGD-TB-80	121	133						
EADC-E16-120-E24	ELGD-TB-120	161	173						

Datasheet

Dimensions – Adjusting kit EADC-E15-... Download CAD data ➔ www.festo.com

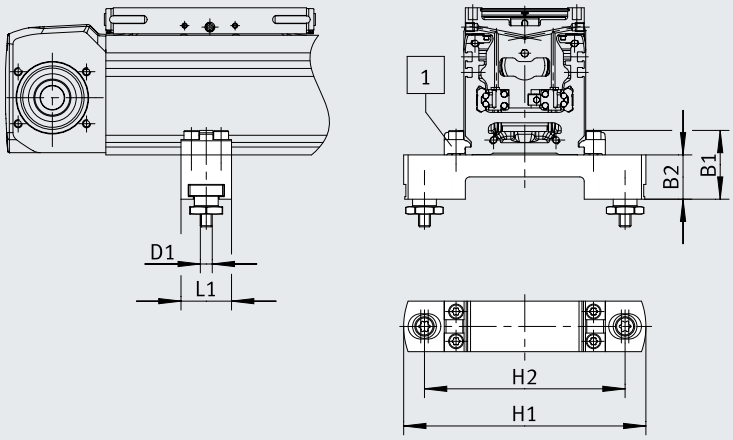

[1] Profile mounting

		B1	B2	D1	H1	H2		L1
						min.	max.	
EADC-E15-60-E24	ELGD-TB-60	46.3	29.8	M8	143	110	120	34
EADC-E15-80-E24	ELGD-TB-80				163	130	140	

Dimensions – Mounting kit EAHM-E15-K-... Download CAD data ➔ www.festo.com

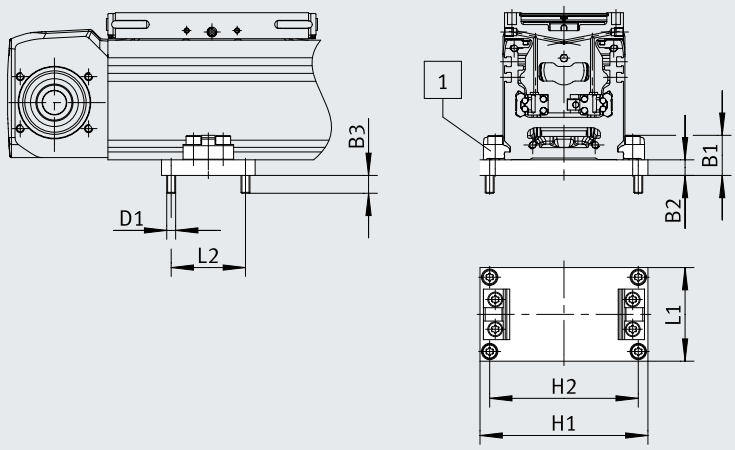

[1] Profile mounting

		B1	B2	B3	D1	H1	H2	L1	L2
EAHM-E15-K-60-E24	ELGD-TB-60	27	10.5	12	M6	93	80	63	50
EAHM-E15-K-80-E24	ELGD-TB-80					113	100		

Datasheet

Dimensions – Mounting kit EAHM-E24-AP-60

Download CAD data ➔ www.festo.com

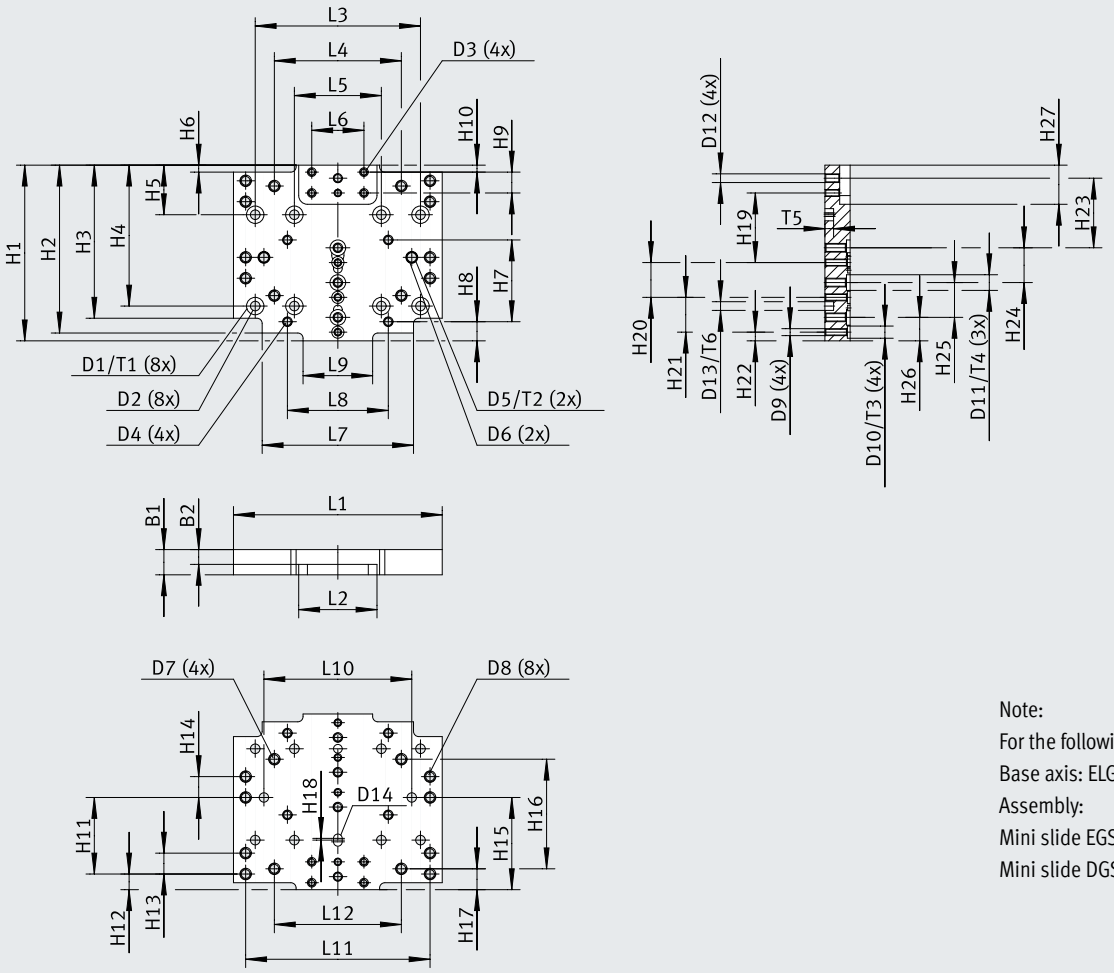

Note:
For the following combinations:
Base axis: ELGD-TB-60-L
Assembly:
Mini slide EGSC-45/60
Mini slide DGST-12/16

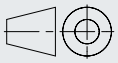

		B1	B2	D1 ⌀ H13	D2 ⌀ H13	D3	D4	D5 ⌀ H7	D6	D7	D8	D9	D10 ⌀ H8	D11 ⌀ H8	D12	D13 ⌀ H8
EAHM-E24-AP-60	ELGD-TB-60-L	14.5	8.5	10	5.5	M4	M5	6	5.4	M6	M6	M4	7	9	M5	5

		D14	H1	H2	H3	H4	H5	H6	H7	H8	H9	H10	H11	H12	H13	H14
EAHM-E24-AP-60	ELGD-TB-60-L	5	101	96.5	88	81	28.5	4	47	11	12	4	44	9	12	12

		H15	H16	H17	H18	H19	H20	H21	H22	H23	H24	H25	H26	H27	L1	L2
EAHM-E24-AP-60	ELGD-TB-60-L	53	63	12	1	40	20	20	5	40	20	20	13.5	22.5	120	45

		L3	L4	L5	L6	L7	L8	L9	L10	L11	L12	T1	T2	T3	T4	T5	T6
EAHM-E24-AP-60	ELGD-TB-60-L	95	73	50	30	87	58	40	85	106	73	7.9	7.7	1.6	2.1	5	5

Datasheet

Dimensions – Mounting kit EAHM-E24-AP-80

Download CAD data ➔ www.festo.com

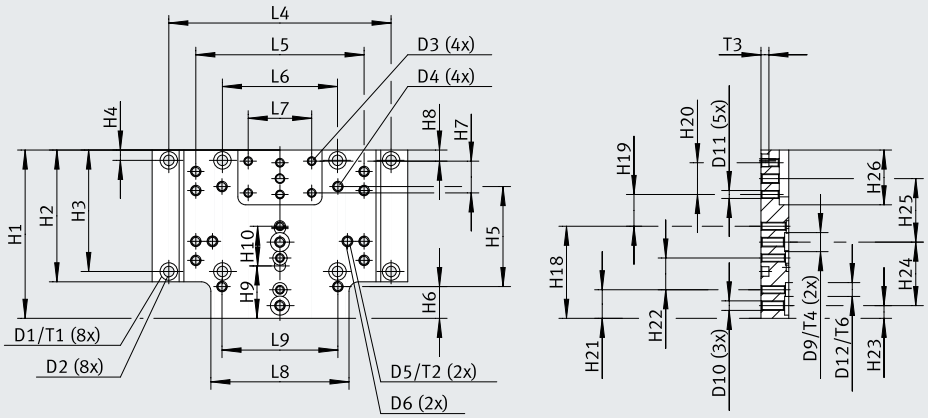

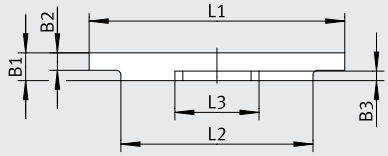

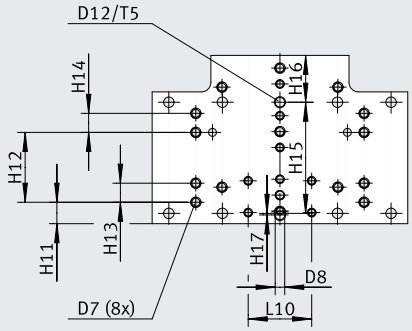

Note:
For the following combinations:
Base axis: ELGD-TB-80-L
Assembly:
Mini slide EGSC-60
Mini slide DGST-16/20

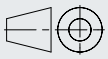

		B1	B2	B3	D1 ⌀ H13	D2 ⌀ H13	D3	D4	D5 ⌀ H7	D6 ⌀	D7	D8 H8	D9 ⌀ H8	D10	D11	D12 ⌀ H8
EAHM-E24-AP-80	ELGD-TB-80-L	17.5	11	6	11	6.6	M5	M6	6	5	M6	6	12	M6	M5	9

		H1	H2	H3	H4	H5	H6	H7	H8	H9	H10	H11	H12	H13	H14	H15
EAHM-E24-AP-80	ELGD-TB-80-L	106	83	76.5	6.5	63	20	20	7	33	25	36.5	44	12	12	70

		H16	H17	H18	H19	H20	H21	H22	H23	H24	H25	H26	L1	L2	L3	L4
EAHM-E24-AP-80	ELGD-TB-80-L	29.5	1	58	20	20	18	20	8	40	40	34.5	161	121	53	140

		L5	L6	L7	L8	L9	L10	T1	T2	T3	T4	T5	T6
EAHM-E24-AP-80	ELGD-TB-80-L	106	72.5	40	87	73	40	13	7.7	5	2.6	5	2.1

Datasheet

Dimensions – Mounting kit EAHM-E24-AP-120

Download CAD data ➔ www.festo.com

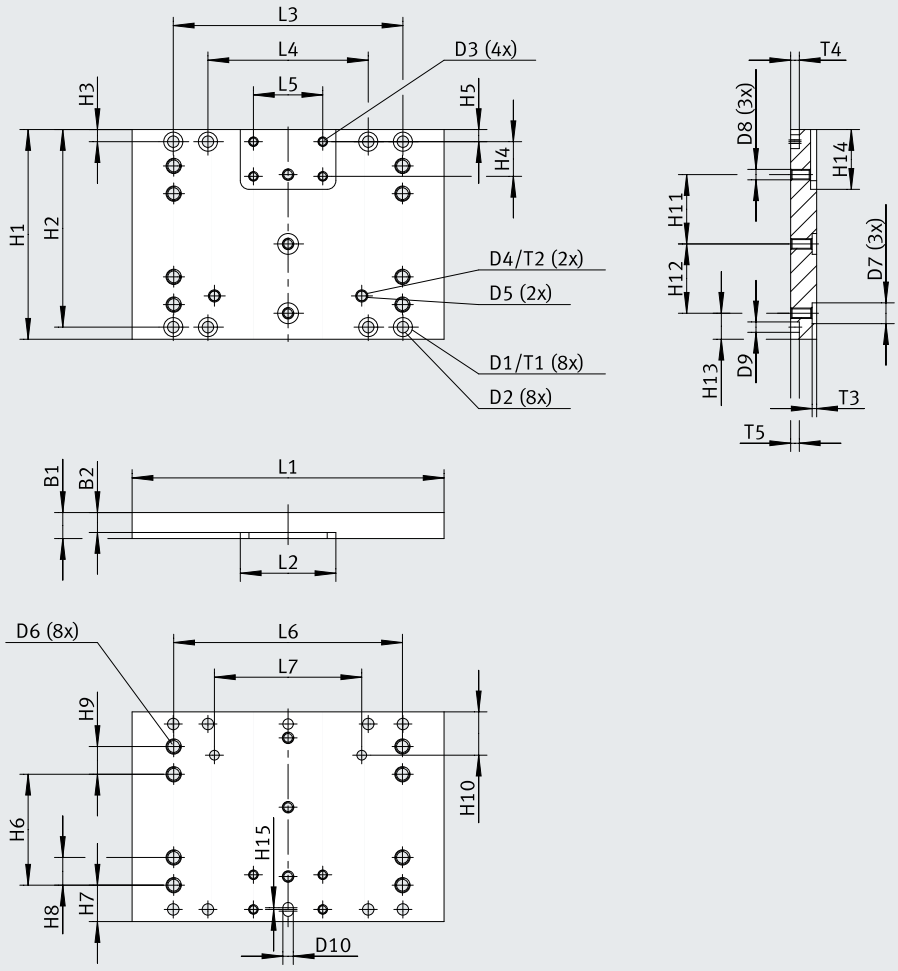

Note:
For the following combinations:
Base axis: ELGD-TB-120-L
Assembly:
Mini slide DGST-20/25

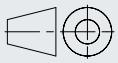

		B1	B2	D1 ⌀ H13	D2 ⌀ H13	D3	D4 ⌀ H7	D5 ⌀	D6	D7 ⌀ H8	D8	D9 ⌀ H8	D10	H1
EAHM-E24-AP-120	ELGD-TB-120-L	15	11.5	11	6.6	M5	6	5.6	M8	12	M6	6	6	121

		H2	H3	H4	H5	H6	H7	H8	H9	H10	H11	H12	H13	H14
EAHM-E24-AP-120	ELGD-TB-120-L	114	7	20	7	64	21	16	16	25	40	40	15	34.5

		L1	L2 +0.5	L3	L4	L5	L6	L7	T1	T2	T3	T4	T5
EAHM-E24-AP-120	ELGD-TB-120-L	180	55.2	132.5	92.5	40	132	85	6.5	5	2.6	5	5

Datasheet

Dimensions – Angle kit EHAM-AK-E24-80-E24-60-ML-L Download CAD data ➔ www.festo.com

Sample illustration:

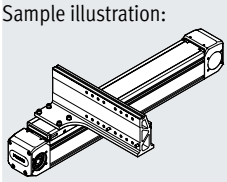

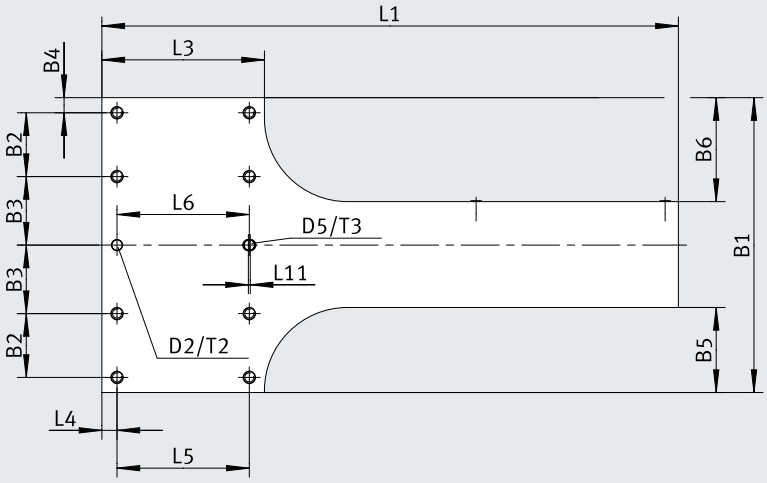

Note:
- Suitable for a cantilever design.
- Mounting position: left
- The profile mountings EAHF-E24-60-P-B4 are provided for mounting an ELGD axis onto the angle kit.

For the following combinations:
Base axis: ELGD-BS-80-L, ELGD-TB-80-L
Assembly axis ELGD-BS-60

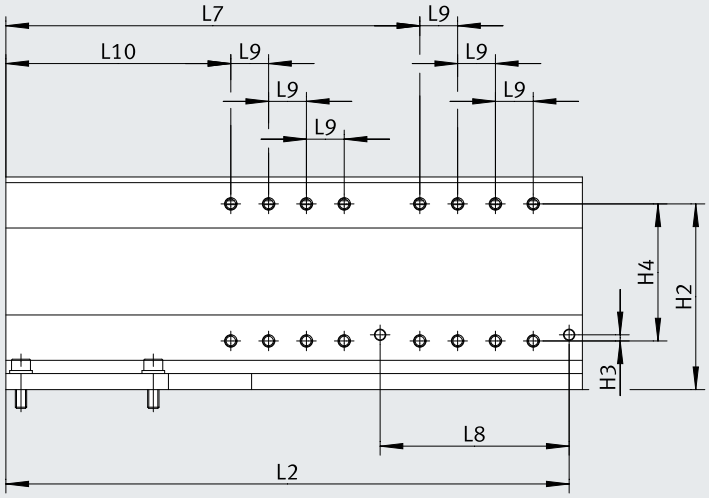

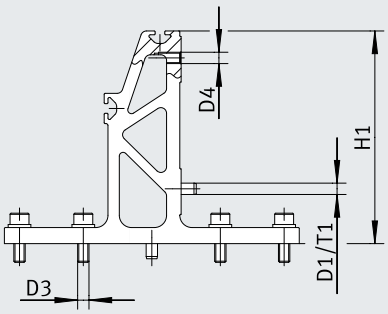

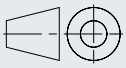

		B1	B2	B3	B4	B5	B6	D1 ⌀	D2 ⌀	D3 ⌀	D4
EHAM-AK-E24-80-E24-60-ML-L	ELGD-TB-80-L	156	33.8	36.3	8	45	55	6	6	6.6	M6

		D5	H1	H2	H3	H4	L1	L2	L3	L4	L5
EHAM-AK-E24-80-E24-60-ML-L	ELGD-TB-80-L	6	112.5	98.3	3.3	72.5	305	298	86	8	70

		L6	L7	L8	L9	L10	L11	T1	T2	T3
EHAM-AK-E24-80-E24-60-ML-L	ELGD-TB-80-L	69.5	219	100	20	119	1	6	5.5	5.5

Datasheet

Dimensions – Angle kit EHAM-AK-E24-80-E24-60-MR-L Download CAD data ➔ www.festo.com

Sample illustration:

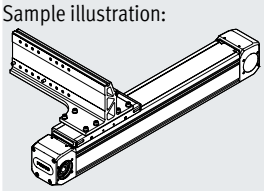

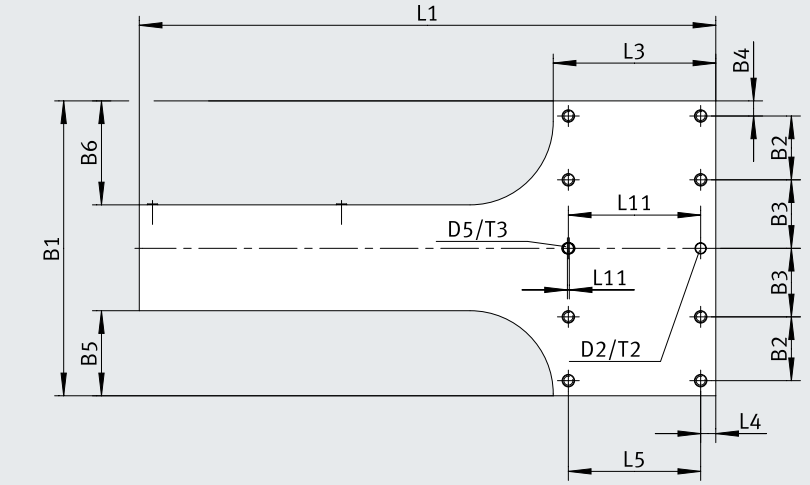

Note:
- Suitable for a cantilever design.
- Mounting position: right
- The profile mountings EAHF-E24-60-P-B4 are provided for mounting an ELGD axis onto the angle kit.

For the following combinations:
Base axis: ELGD-BS-80-L, ELGD-TB-80-L
Assembly axis ELGD-BS-60

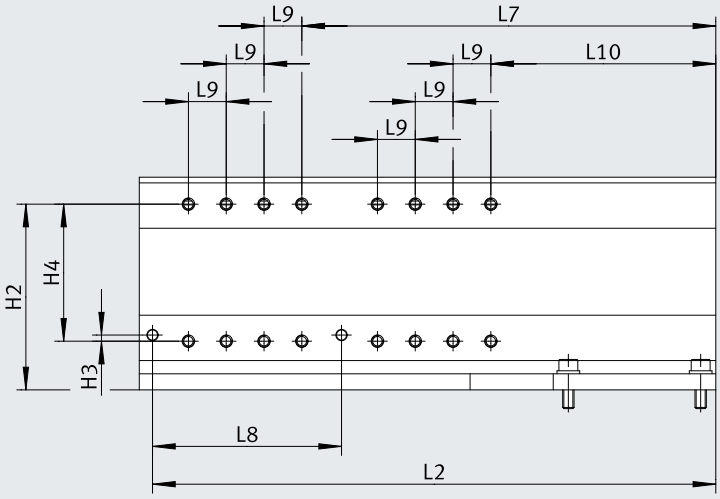

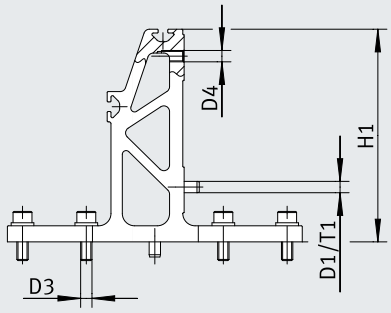

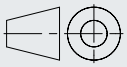

		B1	B2	B3	B4	B5	B6	D1 ⌀	D2 ⌀	D3 ⌀	D4
EHAM-AK-E24-80-E24-60-MR-L	ELGD-TB-80-L	156	33.8	36.3	8	45	55	6	6	6.6	M6

		D5	H1	H2	H3	H4	L1	L2	L3	L4	L5
EHAM-AK-E24-80-E24-60-MR-L	ELGD-TB-80-L	6	112.5	98.3	3.3	72.5	305	298	86	8	70

		L6	L7	L8	L9	L10	L11	T1	T2	T3
EHAM-AK-E24-80-E24-60-MR-L	ELGD-TB-80-L	69.5	219	100	20	119	1	6	5.5	5.5

Datasheet

Dimensions – Angle kit EHAM-AK-E24-80-E24-80-ML-S Download CAD data ➔ www.festo.com

Sample illustration:

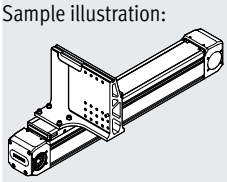

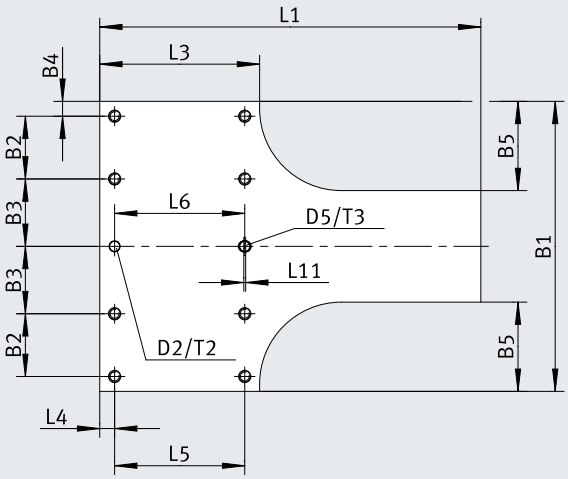

Note:
- Suitable for a three-dimensional gantry design.
- Mounting position: left
- The profile mountings EAHF-E24-60-P-B4 are provided for mounting an ELGD axis onto the angle kit.

For the following combinations:
Base axis: ELGD-BS-80-L, ELGD-TB-80-L
Assembly axis: ELGD-BS-80, ELGD-TB-80, ELGD-BS-WD-100, ELGD-TB-WD-100, ELGD-BS-WD-120, ELGD-TB-WD-120

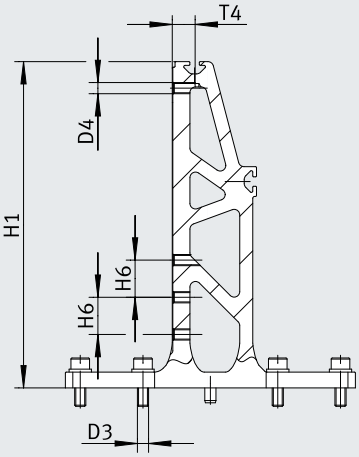

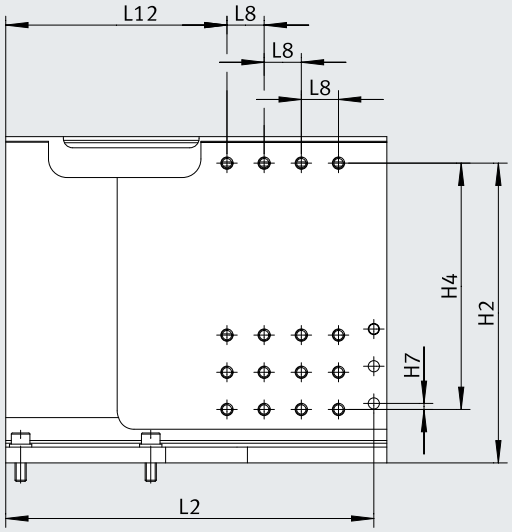

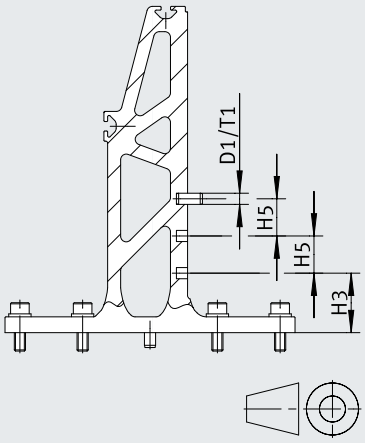

		B1	B2	B3	B4	B5	D1 ⌀	D2 ⌀	D3 ⌀	D4	D5
EHAM-AK-E24-80-E24-80-ML-S	ELGD-TB-80-L	156	33.8	36.3	8	45	6	6	6.6	M6	6

		H1	H2	H3	H4	H5	H6	H7	L1	L2	L3
EHAM-AK-E24-80-E24-80-ML-S	ELGD-TB-80-L	175.5	161.3	32	132.5	20	20	3.3	205	198	86

		L4	L5	L6	L8	L11	L12	T1	T2	T3	T4
EHAM-AK-E24-80-E24-80-ML-S	ELGD-TB-80-L	8	70	69.5	20	1	119	6	5.5	5.5	14.3

Datasheet

Dimensions – Angle kit EHAM-AK-E24-80-E24-80-MR-S Download CAD data ➔ www.festo.com

Sample illustration:

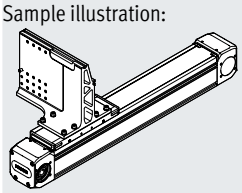

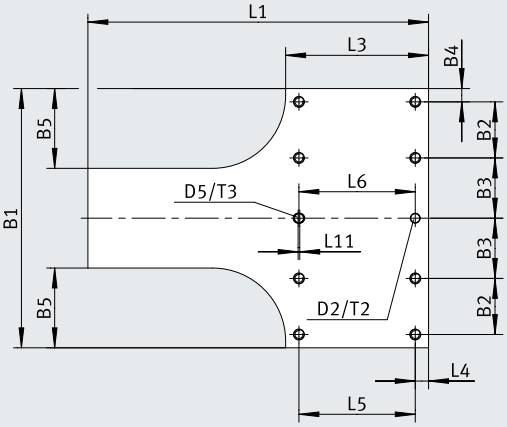

Note:
- Suitable for a three-dimensional gantry design.
- Mounting position: right
- The profile mountings EAHF-E24-60-P-B4 are provided for mounting an ELGD axis onto the angle kit.

For the following combinations:
Base axis: ELGD-BS-80-L, ELGD-TB-80-L
Assembly: ELGD-BS-80, ELGD-TB-80, ELGD-BS-WD-100, ELGD-TB-WD-100, ELGD-BS-WD-120, ELGD-TB-WD-120

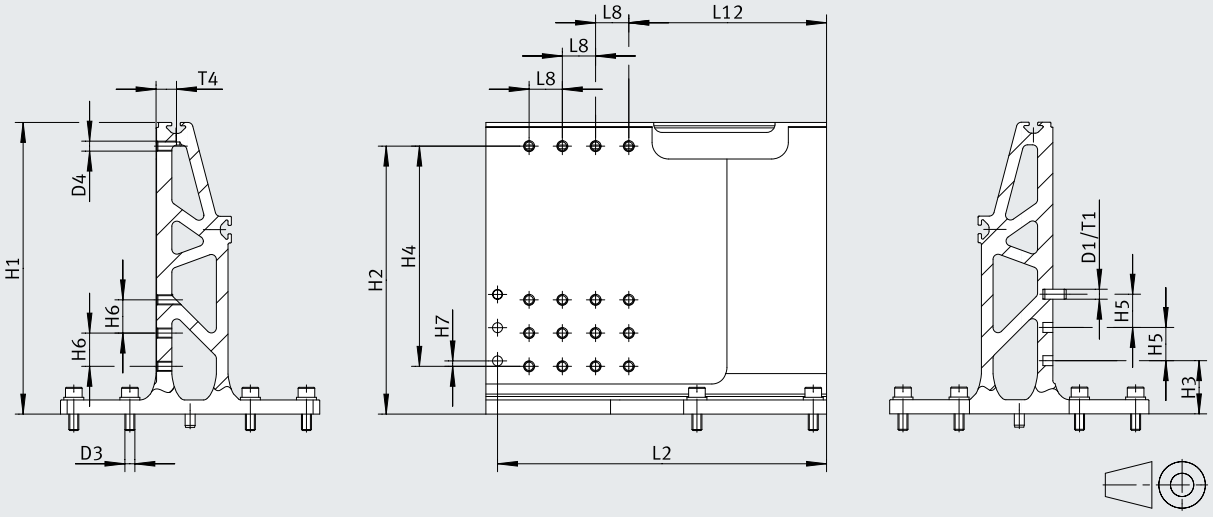

		B1	B2	B3	B4	B5	D1 ⌀	D2 ⌀	D3 ⌀	D4	D5
EHAM-AK-E24-80-E24-80-MR-S	ELGD-TB-80-L	156	33.8	36.3	8	45	6	6	6.6	M6	6

		H1	H2	H3	H4	H5	H6	H7	L1	L2	L3
EHAM-AK-E24-80-E24-80-MR-S	ELGD-TB-80-L	175.5	161.3	32	132.5	20	20	3.3	205	198	86

		L4	L5	L6	L8	L11	L12	T1	T2	T3	T4
EHAM-AK-E24-80-E24-80-MR-S	ELGD-TB-80-L	8	70	69.5	20	1	119	6	5.5	5.5	14.3

Datasheet

Dimensions – Profile mounting EAHF-E24-60-P-B4

Download CAD data ➔ www.festo.com

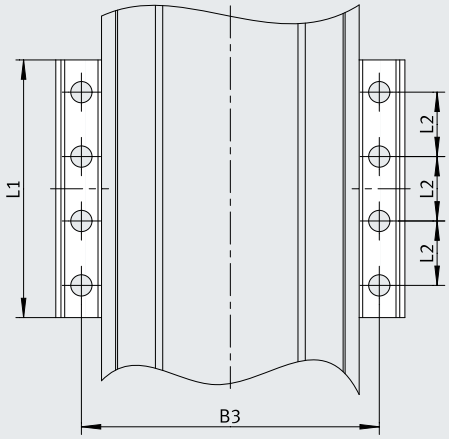

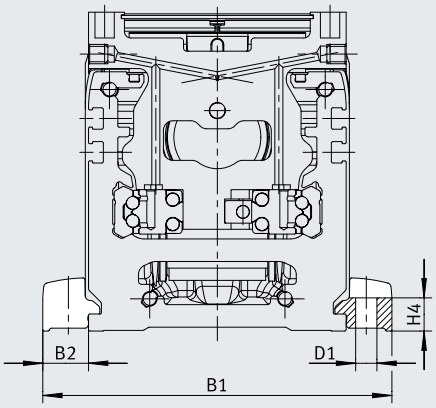

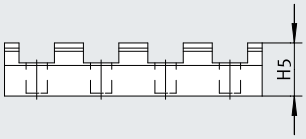

Note:
The profile mounting EAHF-E24-60-P-B4 is designed for mounting an ELGD axis onto angle kit EHAM-AK-E24-...

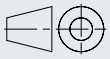

		B1	B2	B3	D1 Ø H13	H4 ±0.1	H5	L1	L2
EAHF-E24-60-P-B4	ELGD-TB-60	88.4	14.2	72.5	6.6	10.3	16.5	80	20
	ELGD-TB-80	108.4	14.2	92.5	6.6	10.3	16.5	80	20

Datasheet

Dimensions – Switch lug EAPM-E24-60-SLS Download CAD data ➔ www.festo.com

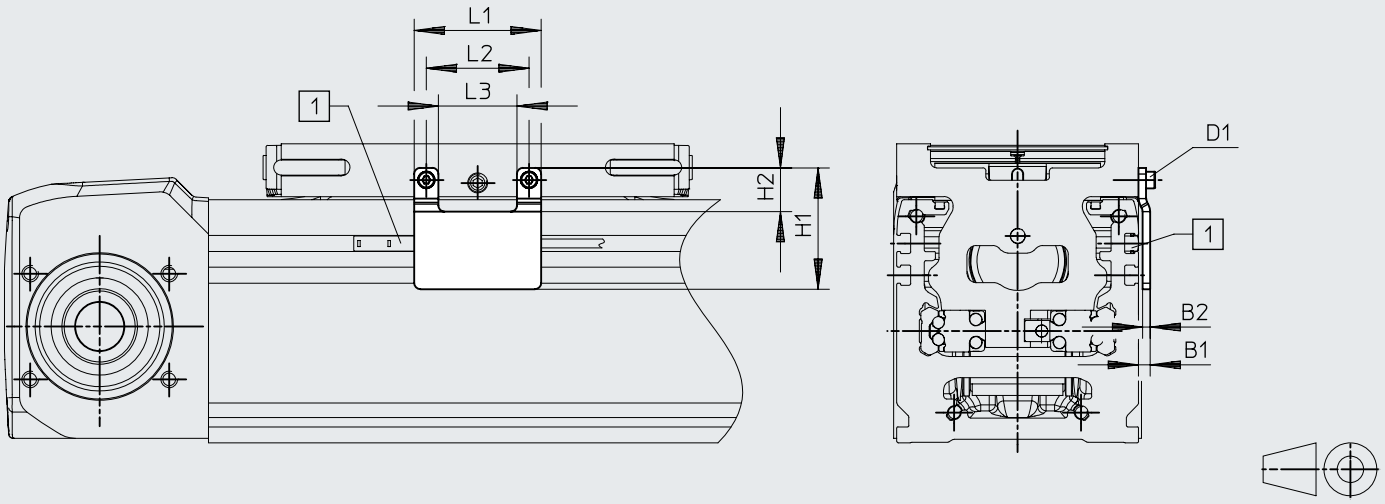

[1] Sensor slot for proximity switch SIES-8M

		B1	B2	D1	H1	H2	L1	L2	L3
EAPM-E24-60-SLS	ELGD-TB-60	3.5	2.5	M3	40.2	14.5	42	34	26
	ELGD-TB-80								
	ELGD-TB-120								

Datasheet

Dimensions – Switch lug EAPM-E24-...-SLE Download CAD data ➔ www.festo.com

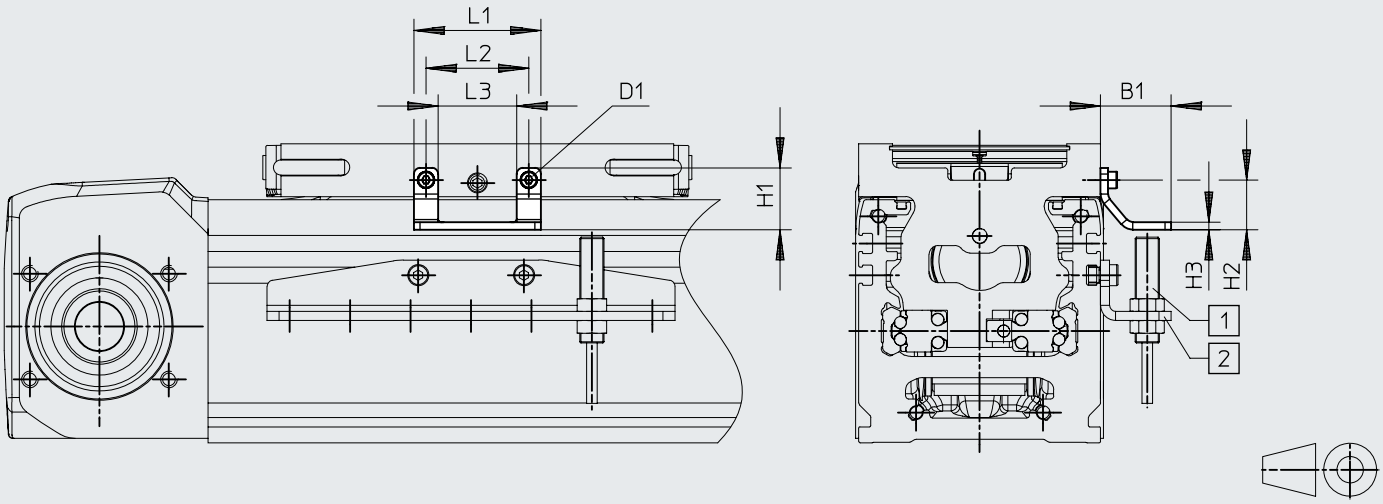

[1] Proximity switch SIEN-M8
[2] Sensor bracket EAPM-E24-60-SHE

		B1	D1	H1	H2	H3	L1	L2	L3
EAPM-E24-60-SLE	ELGD-TB-60	23.4	M3	20.5	16.5	2.5	42	34	26
	ELGD-TB-80								
	ELGD-TB-120								

Datasheet

Dimensions – Sensor bracket EAPM-E24-60-SHE Download CAD data ➔ www.festo.com

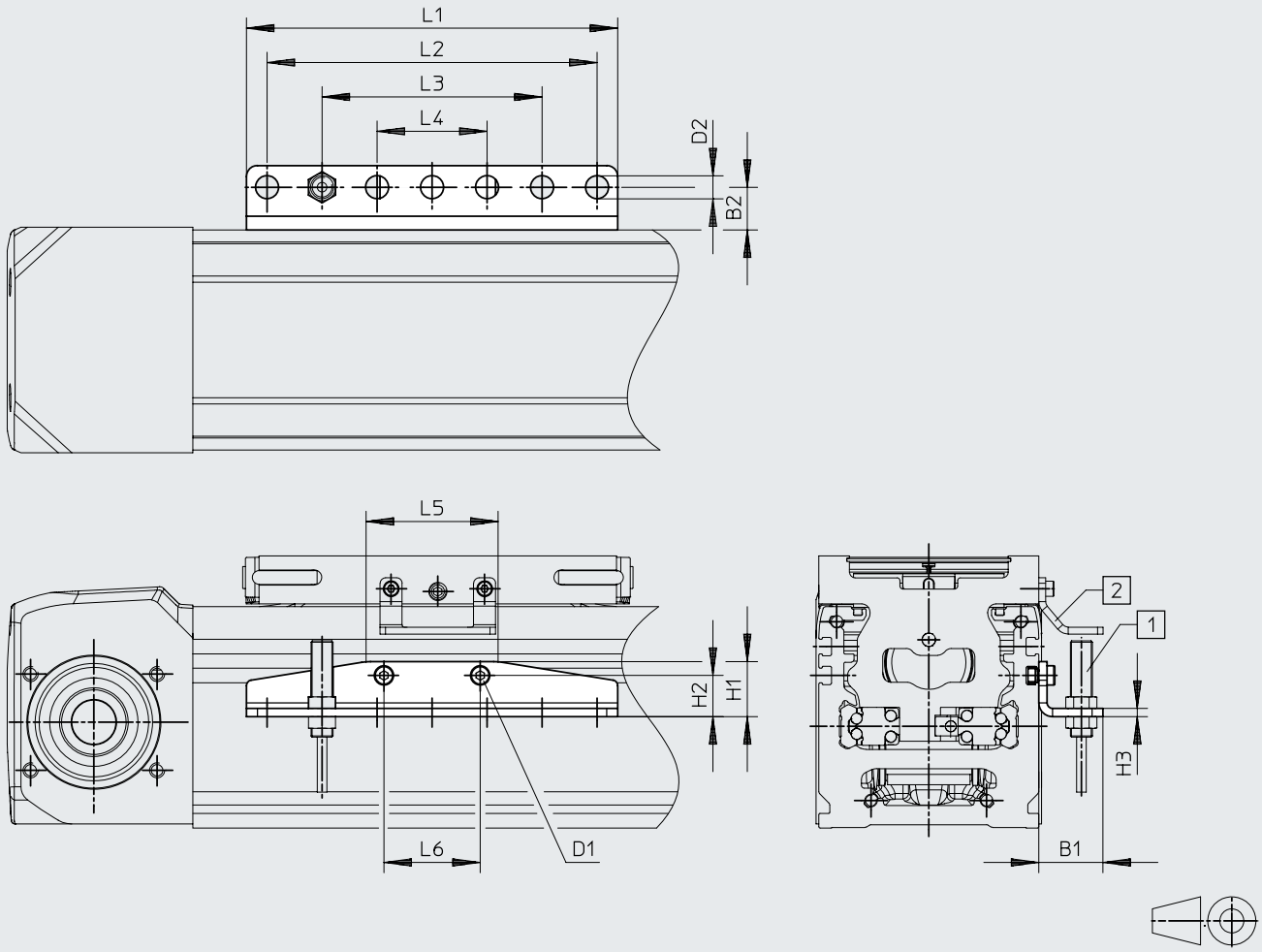

[1] Proximity switch SIEN-8M
[2] Switch lug EAPM-E24-60-SLE

		B1 ±0.3	B2	D1	D2 ø H13	H1 ±0.3	H2	H3
EAPM-E24-60-SHE	ELGD-TB-60 ELGD-TB-80 ELGD-TB-120	23.4	15.5	M4	8.4	20	15	3

		L1 ±0.2	L2	L3	L4	L5	L6
EAPM-E24-60-SHE	ELGD-TB-60 ELGD-TB-80 ELGD-TB-120	135	120	80	40	48	35

Datasheet

Dimensions – Sensor bracket EAPM-E24-60-SHO Download CAD data ➔ www.festo.com

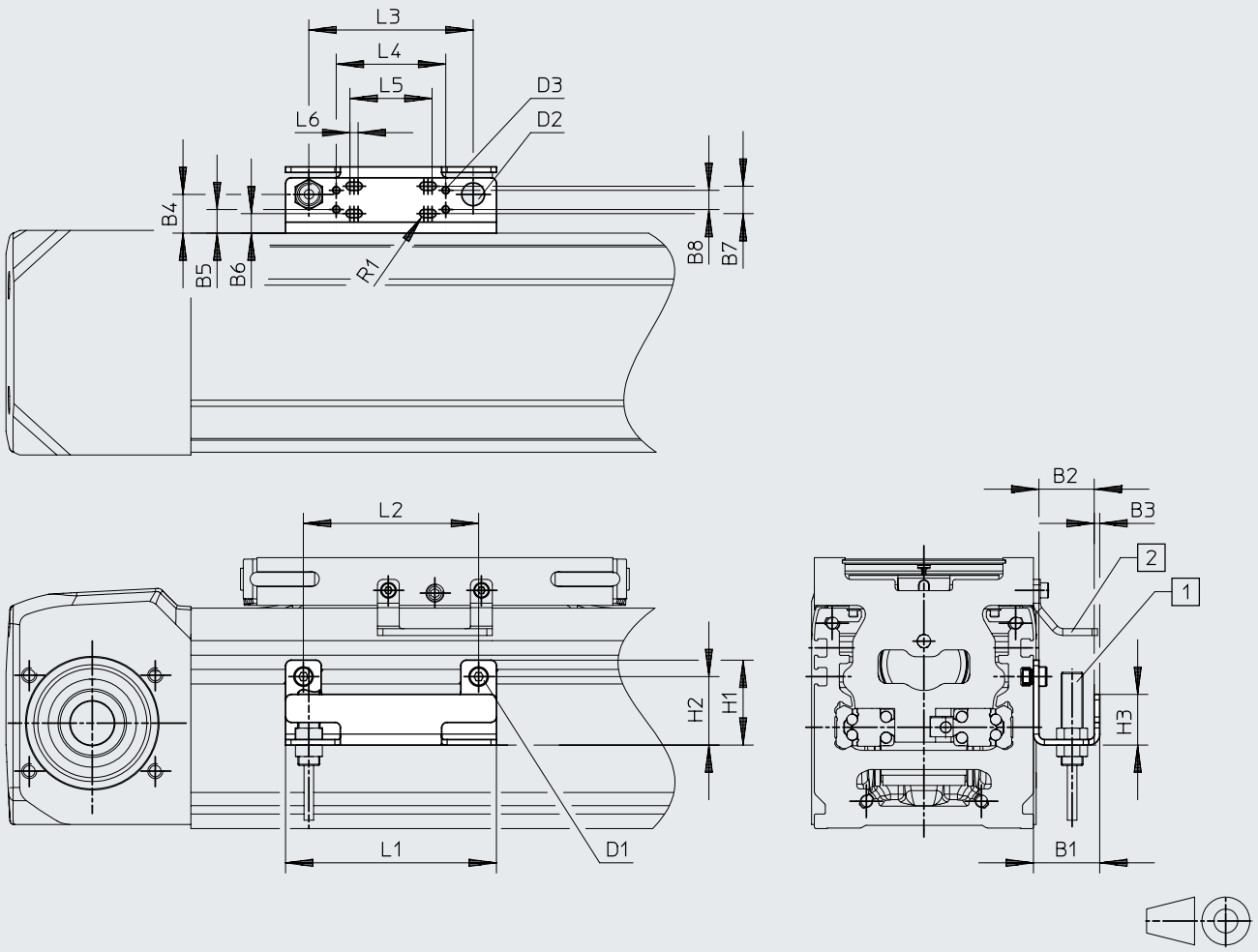

[1] Inductive sensor M8
[2] Switch lug EAPM-E24-60-SLE

		B1	B2	B3	B4	B5	B6	B7
EAPM-E24-60-SHO	ELGD-TB-60	24.2	20.2	2	14.1	8.6	7.1	10
	ELGD-TB-80							
	ELGD-TB-120							

		B8	D1	D2 ø	D3	H1	H2	H3
EAPM-E24-60-SHO	ELGD-TB-60	7	M3	8.4	M3	31	25	18.5
	ELGD-TB-80							
	ELGD-TB-120							

		L1	L2	L3	L4	L5	L6	R1
EAPM-E24-60-SHO	ELGD-TB-60	77	64	60	40	24	3	1.5
	ELGD-TB-80							
	ELGD-TB-120							

Datasheet

Dimensions – ELGD-...-M3 with incremental displacement encoder

Download CAD data ➔ www.festo.com

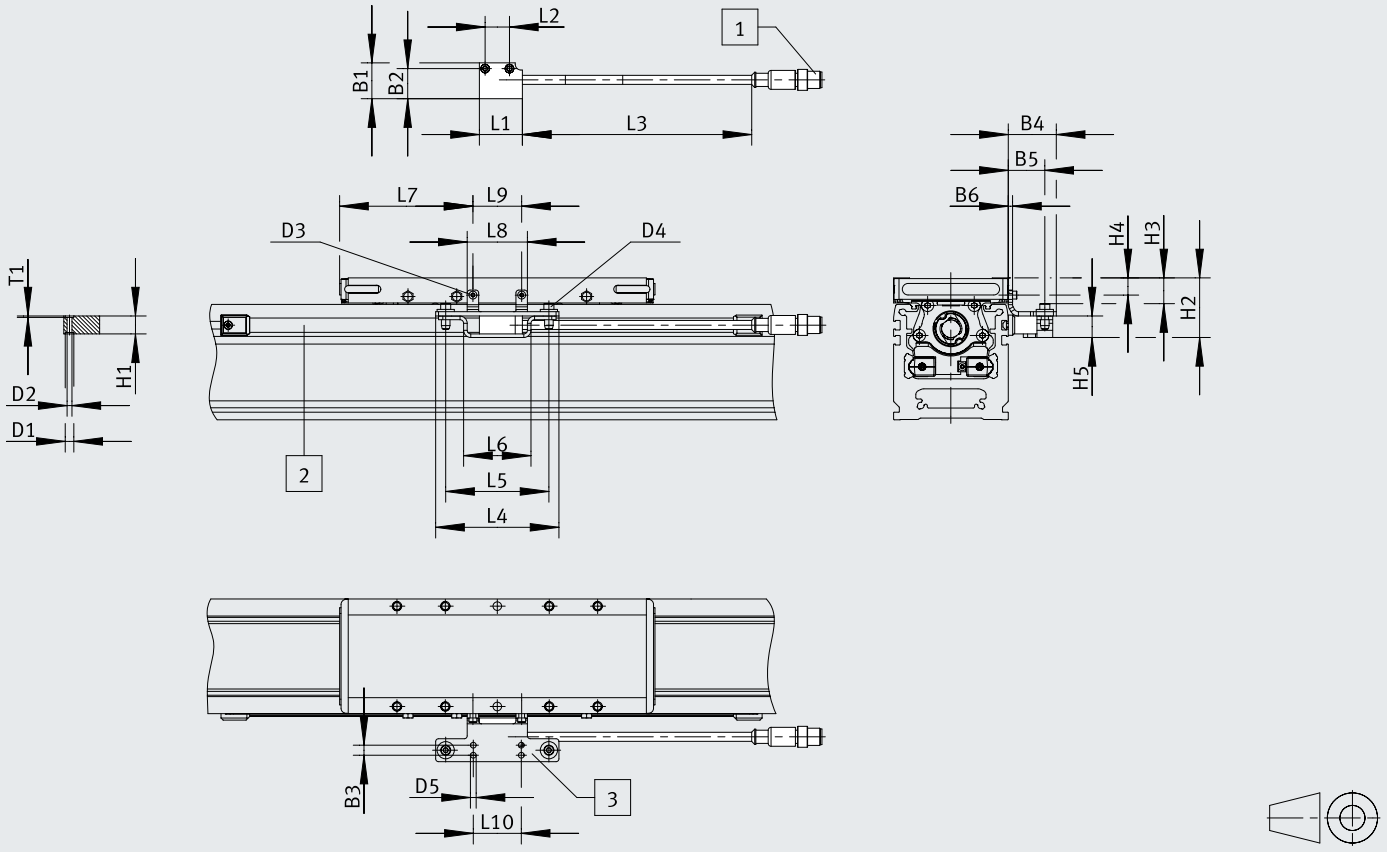

[1] Plug M12 (8-pin)
[2] Displacement encoder
[3] Switch lug

	B1	B2	B3	B4	B5	B6	D1 Ø
ELGD-TB-60	25	21	7	33.5	25.5	3	6
ELGD-TB-80							
ELGD-TB-120							

	D2 Ø	D3	D4	D5 Ø	H1 ±0.1	H2	H3
ELGD-TB-60	3.4	M2	M4	4	12.5	40.6	17
ELGD-TB-100						41.6	18
ELGD-TB-120						42.6	19

	H4	H5	L1	L2	L3	L4	L5
ELGD-TB-60	11	15	30	17	160	86	72
ELGD-TB-100	12						
ELGD-TB-120	13						

	L6	L7 ELGD-...	L7 ELGD-...L	L8	L9	L10	T1
ELGD-TB-60	47	42	62.5	42	34	33.5	1
ELGD-TB-100		54	93				
ELGD-TB-120		64	114.5				

Datasheet

Dimensions – Drive shaft adapter EAMB-... Download CAD data ➔ www.festo.com

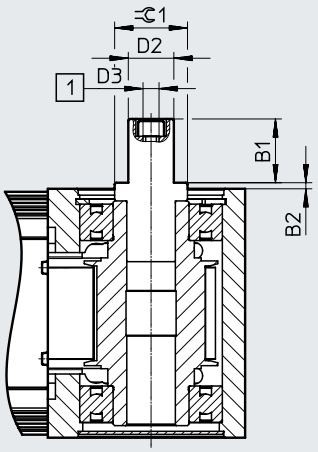

[1] Draw-off thread

		B1	B2	D2 ø h7	D3	⌯1
EAMB-24-9-15X21-16X20	ELGD-TB-60	21	1.85	15	M6	21
EAMB-24-6-15X21-16X20	ELGD-TB-80	21	2	15	M6	21
EAMB-34-6-25X26-23X27	ELGD-TB-120	26	2	25	M10	30

Datasheet

Ordering data

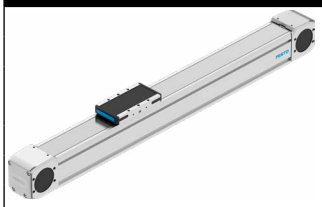

Size	Stroke [mm]	Part no.	Type
60	200	**8192344**	**ELGD-TB-KF-60-200-0H-PU2**
	300	**8192345**	**ELGD-TB-KF-60-300-0H-PU2**
	500	**8192346**	**ELGD-TB-KF-60-500-0H-PU2**
	600	**8192347**	**ELGD-TB-KF-60-600-0H-PU2**
	800	**8192348**	**ELGD-TB-KF-60-800-0H-PU2**
	1000	**8192349**	**ELGD-TB-KF-60-1000-0H-PU2**
	1200	**8192350**	**ELGD-TB-KF-60-1200-0H-PU2**
	1500	**8192351**	**ELGD-TB-KF-60-1500-0H-PU2**
	1800	**8192352**	**ELGD-TB-KF-60-1800-0H-PU2**
	2000	**8192353**	**ELGD-TB-KF-60-2000-0H-PU2**
80	200	**8192354**	**ELGD-TB-KF-80-200-0H-PU2**
	300	**8192355**	**ELGD-TB-KF-80-300-0H-PU2**
	500	**8192356**	**ELGD-TB-KF-80-500-0H-PU2**
	600	**8192357**	**ELGD-TB-KF-80-600-0H-PU2**
	800	**8192358**	**ELGD-TB-KF-80-800-0H-PU2**
	1000	**8192359**	**ELGD-TB-KF-80-1000-0H-PU2**
	1200	**8192360**	**ELGD-TB-KF-80-1200-0H-PU2**
	1500	**8192361**	**ELGD-TB-KF-80-1500-0H-PU2**
	1800	**8192362**	**ELGD-TB-KF-80-1800-0H-PU2**
	2000	**8192363**	**ELGD-TB-KF-80-2000-0H-PU2**
120	200	**8192364**	**ELGD-TB-KF-120-200-0H-PU2**
	300	**8192365**	**ELGD-TB-KF-120-300-0H-PU2**
	500	**8192366**	**ELGD-TB-KF-120-500-0H-PU2**
	600	**8192367**	**ELGD-TB-KF-120-600-0H-PU2**
	800	**8192368**	**ELGD-TB-KF-120-800-0H-PU2**
	1000	**8192369**	**ELGD-TB-KF-120-1000-0H-PU2**
	1200	**8192370**	**ELGD-TB-KF-120-1200-0H-PU2**
	1500	**8192371**	**ELGD-TB-KF-120-1500-0H-PU2**
	1800	**8192372**	**ELGD-TB-KF-120-1800-0H-PU2**
	2000	**8192373**	**ELGD-TB-KF-120-2000-0H-PU2**

Ordering data – Modular product system

More information ➔ elgd-tb

Size	Stroke [mm]	Part no.	Type
60	50 ... 8500	**8176884**	**ELGD-TB-KF-60-...**
80	50 ... 8500	**8176885**	**ELGD-TB-KF-80-...**
120	50 ... 8500	**8176886**	**ELGD-TB-KF-120-...**

Peripherals overview

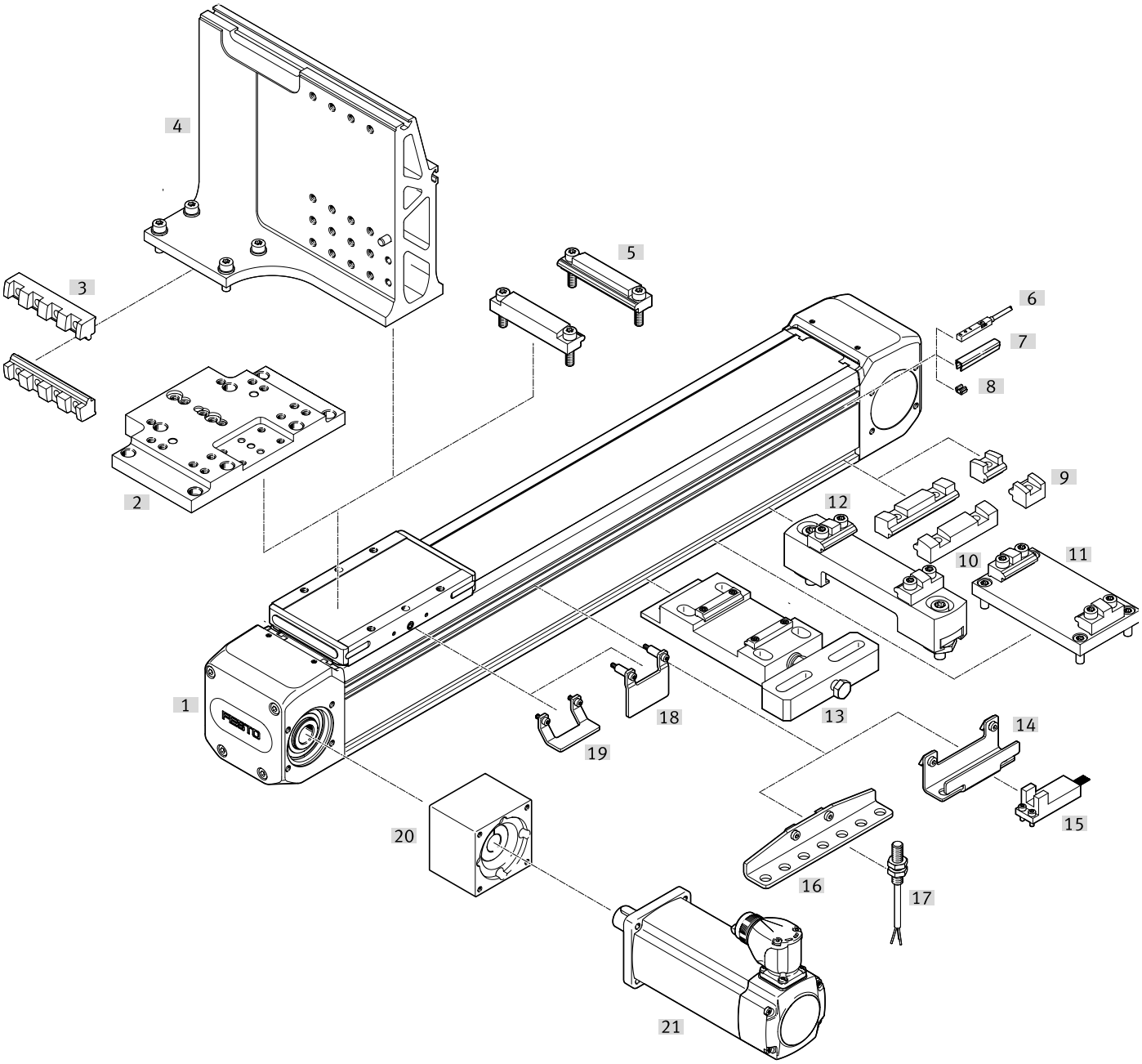

Peripherals overview

Accessories

	Type	Description	➔ Page/Internet
[1]	Toothed belt axis ELGD-TB	Electric drive	elgd-tb
[2]	Mounting kit EAHM-E...-AP	For mounting mini slide DGST or EGSC on the slide	47
[3]	Profile mounting EAHF-E24-60-P-B4	The profile mounting EAHF-E24-60-P-B4 is designed for mounting an ELGD axis onto the angle kit EHAM-AK-E24-...	46
[4]	Angle kit EHAM-AK-E24	• Suitable for a cantilever or three-dimensional gantry design • The profile mountings EAHF-E24-60-P-B4 are provided for mounting an ELGD axis onto the angle kit • When used in combination with the angle kit, the axis with a long slide must be selected	47
[5]	Profile mounting EAHF-E24-...-D...	For axis/axis mounting with adapter plate	46
[6]	Proximity switch, T-slot SIES-8M	Inductive proximity switch, for T-slot	48
[7]	Slot cover ABP-S	For protection against contamination	49
[8]	Clip SMBK	For mounting the proximity switch cable in the slot	49
[9]	Profile mounting EAHF-E24-...-S	For mounting the axis on the side of the profile	46
[10]	Profile mounting EAHF-E24-...	For mounting the axis on the side of the profile	46
[11]	Mounting kit EAHM-E15-K	For mounting the axis on the side of the profile	47
[12]	Adjusting kit EADC-E15	Height-adjustable. Can be used to easily compensate for any unevenness in the bearing surface	47
[13]	Adjusting kit EADC-E16	For mounting the axis on a vertical surface. After mounting, the axis must be aligned horizontally.	47
[14]	Sensor bracket EAPM-E24-SHO	For mounting third-party sensors on the axis	48
[15]	Sensor OMRON	Third-party sensor OMRON, EE-SX674 series	–
[16]	Sensor bracket EAPM-E24-SHE	For mounting the inductive proximity switches SIEN-M8 (round design) on the axis	48
[17]	Proximity switch, M8 SIEN-M8	Inductive proximity switch, round design	49
[18]	Switch lug EAPM-E24-SLS	For sensing the slide position using inductive proximity switch SIES-8M or for optical sensors (Omron) with sensor bracket EAPM-E24-SHO	48
[19]	Switch lug EAPM-E24-SLE	For sensing the slide position using inductive proximity switch SIEN-M8 (round design) and sensor bracket EAPM-E24-SHE	48
[20]	Axial kit EAMM	For axial motor mounting	eamm-a
[21]	Motor EMMT	Motors and kits specially matched with the axis Detailed information: www.festo.com/catalogue/eamm Engineering tool: www.festo.com/x/electric-motion-sizing	emmt

Accessories

Permitted axis/motor combinations for axial kits

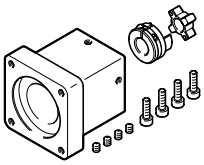

Full information is available via the following link:
- Axis/motor combinations
- Permitted third-party motors
- Technical data
- Dimensions

For axial kits ➔ eamm-a

Connecting shaft KSK

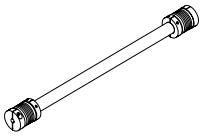

- For synchronising two base axes in gantry systems

Full information is available via the following link:
Connecting shaft ➔ ksk

Profile mounting EAHF-E24-...-P-S

	Description	Suitable for the production of Li-ion batteries	Material	Product weight	Part no.	Type
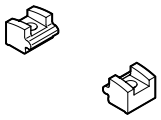	For size 60, 80, 120, WD-100, WD-120	F1a	Anodised wrought aluminium alloy	18 g	**8197128**	**EAHF-E24-60-P-S**

Profile mounting EAHF-E24-...-P

	Description	Suitable for the production of Li-ion batteries	Material	Product weight	Part no.	Type
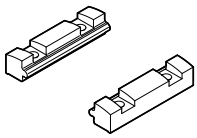	For size 60, 80, 120, WD-100, WD-120	F1a	Anodised wrought aluminium alloy	71 g	**8197132**	**EAHF-E24-60-P**

Profile mounting EAHF-E24-...-P-D...

	Description1)	Suitable for the production of Li-ion batteries	Material	Product weight	Part no.	Type
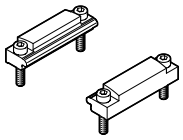	ELGD-60 on ELGD-60-L [1)]	F1a	Anodised wrought aluminium alloy	87 g	**8197131**	**EAHF-E24-60-P-D5**
	ELGD-60 on ELGD-80			119 g	**8197129**	**EAHF-E24-60-P-D4**
	ELGD-60 on ELGD-WD-100-L [1)]			133 g	**8197130**	**EAHF-E24-60-P-D6**
	ELGD-80 on ELGD-WD-100-L			133 g	**8197130**	**EAHF-E24-60-P-D6**
	ELGD-80 on ELGD-120-L			165 g	**8229954**	**EAHF-E24-60-P-D7**
	ELGD-WD-100-L on ELGD-120-L			165 g	**8229954**	**EAHF-E24-60-P-D7**

1) With these combinations, the axis is mounted off-centre on the slide (see dimension L13 on the dimensional drawing with long slide).

Profile mounting EAHF-E24-60-P-B4

	Description	Suitable for the production of Li-ion batteries	Material	Product weight	Part no.	Type
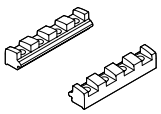	For size 60, 80, 120, WD-100, WD-120	F1a	Anodised wrought aluminium alloy	72 g	**8226570**	**EAHF-E24-60-P-B4**

Accessories

Mounting kit EAHM-E15-K

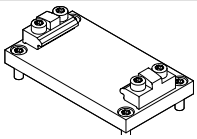

Description	Adapter plate material	Product weight	Part no.	Type
For size 60	Anodised aluminium	242 g	**8234422**	**EAHM-E15-K-60-E24**
For size 80	Anodised aluminium	277 g	**8234423**	**EAHM-E15-K-80-E24**

Adjusting kit EADC-E15

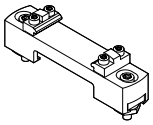

Description	Adapter plate material	Product weight	Part no.	Type
For size 60	Anodised wrought aluminium alloy	377 g	**8234417**	**EADC-E15-60-E24**
For size 80	Anodised wrought aluminium alloy	466 g	**8234418**	**EADC-E15-80-E24**

Adjusting kit EADC-E16

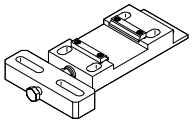

Description	Adapter plate material	Product weight	Part no.	Type
For size 60	Anodised wrought aluminium alloy	650 g	**8234412**	**EADC-E16-60-E24**
For size 80	Anodised wrought aluminium alloy	715 g	**8234413**	**EADC-E16-80-E24**
For size 120	Anodised wrought aluminium alloy	845 g	**8234414**	**EADC-E16-120-E24**

Mounting kit EAHM-E...-AP

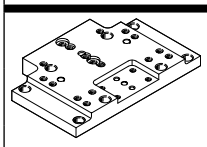

Description	For assembly	Adapter plate material	Product weight	Part no.	Type
For size 60	EGSC-45/60 DGST-12/16	Anodised aluminium	449 g	**8238432**	**EAHM-E24-AP-60**
For size 80	EGSC-60 DGST-16/20	Anodised aluminium	722 g	**8238433**	**EAHM-E24-AP-80**
For size 120	DGST-20/25	Anodised aluminium	887 g	**8238435**	**EAHM-E26-AP-120**

Angle kit EHAM-AK-E24

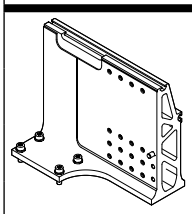

Description	For assembly	Mounting position	Adapter plate material	Product weight	Part no.	Type
ELGD-60 on ELGD-80-L	Cantilever systems	Left	Anodised aluminium	2240 g	**8240704**	**EHAM-AK-E24-80-E24-60-ML-L**
	Cantilever systems	Right	Anodised aluminium	2240 g	**8240705**	**EHAM-AK-E24-80-E24-60-MR-L**
ELGD-80, ELGD-WD-100, ELGD-WD-120 on ELGD-80-L	Three-dimensional gantry	Left	Anodised aluminium	2580 g	**8240706**	**EHAM-AK-E24-80-E24-80-ML-S**
	Three-dimensional gantry	Right	Anodised aluminium	2580 g	**8240707**	**EHAM-AK-E24-80-E24-80-MR-S**

Accessories

Switch lug EAPM-E24-...-SLS

	Description	Suitable for the production of Li-ion batteries	Material	Product weight	Part no.	Type
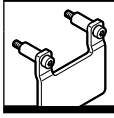	For size 60, 80, 120	F1a	Steel	32 g	**8197117**	**EAPM-E24-60-SLS**

Switch lug EAPM-E24-...-SLE

	Description	Suitable for the production of Li-ion batteries	Material	Product weight	Part no.	Type
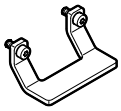	For size 60, 80, 120	F1a	Steel	20 g	**8197116**	**EAPM-E24-60-SLE**

Sensor bracket EAPM-E24-...-SHE

	Description	Suitable for the production of Li-ion batteries	Material	Product weight	Part no.	Type
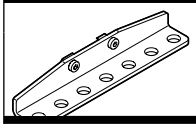	For size 60, 80, 120	F1a	Steel	103 g	**8197123**	**EAPM-E24-60-SHE**

Sensor bracket EAPM-E24-...-SHO

	Description	Suitable for the production of Li-ion batteries	Material	Product weight	Part no.	Type
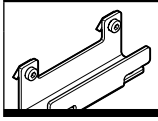	For size 60, 80, 120	F1a	Steel	67 g	**8197121**	**EAPM-E24-60-SHO**

Proximity switch for T-slot, inductive

Datasheets → Internet: sies

	Type of mounting	Switching output	Electrical connection	Cable length [m]	Part no.	Type
N/O						
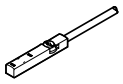	Inserted in the slot from above, flush with the cylinder profile	PNP	Cable, 3-core	7.5	**551386**	**SIES-8M-PS-24V-K-7.5-OE**
			Plug M8x1, 3-pin	0.3	**551387**	**SIES-8M-PS-24V-K-0.3-M8D**
		NPN	Cable, 3-core	7.5	**551396**	**SIES-8M-NS-24V-K-7.5-OE**
			Plug M8x1, 3-pin	0.3	**551397**	**SIES-8M-NS-24V-K-0.3-M8D**
N/C						
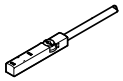	Inserted in the slot from above, flush with the cylinder profile	PNP	Cable, 3-core	7.5	**551391**	**SIES-8M-PO-24V-K-7.5-OE**
			Plug M8x1, 3-pin	0.3	**551392**	**SIES-8M-PO-24V-K-0.3-M8D**
		NPN	Cable, 3-core	7.5	**551401**	**SIES-8M-NO-24V-K-7.5-OE**
			Plug M8x1, 3-pin	0.3	**551402**	**SIES-8M-NO-24V-K-0.3-M8D**

Accessories

Proximity switch M8 (round design), inductive

Datasheets → Internet: sien

	Switching output	Electrical connection	Cable length [m]	Part no.	Type
N/O					
	PNP	Cable, 3-core	2.5	**150386**	**SIEN-M8B-PS-K-L**
	NPN		2.5	**150384**	**SIEN-M8B-NS-K-L**
	PNP	Plug M8x1, 3-pin	–	**150387**	**SIEN-M8B-PS-S-L**
	NPN		–	**150385**	**SIEN-M8B-NS-S-L**
N/C					
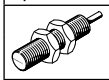	PNP	Cable, 3-core	2.5	**150390**	**SIEN-M8B-PO-K-L**
	NPN		2.5	**150388**	**SIEN-M8B-NO-K-L**
	PNP	Plug M8x1, 3-pin	–	**150391**	**SIEN-M8B-PO-S-L**
	NPN		–	**150389**	**SIEN-M8B-NO-S-L**

Slot cover ABP-5-S1

	Description	Material	Pack size	Product weight	Part no.	Type
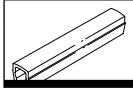	For size 60, 80, 120	ABS	2 every 0.5 m	13 g	**563360**	**ABP-5-S1**

Clip SMBK

	Description	Pack size	Product weight	Part no.	Type
	For size 60, 80, 120	10	1 g	**534254**	**SMBK-8**

Drive shaft adapter EAMB

	Description	Transferable torque	Product weight	Part no.	Type
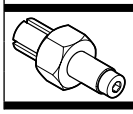	For size 60	29Nm	72 g	**1344642**	**EAMB-24-9-15X21-16X20**
	For size 80	29Nm	68 g	**558036**	**EAMB-24-6-15X21-16X20**
	For size 120	100 Nm	201	**558037**	**EAMB-34-6-25X26-23X27**

Ordering data – Encoder cables for displacement encoder, ELGD-...-M3

Datasheets → Internet: nebm

	Electrical connection, left	Electrical connection, right	Cable length [m]	Part no.	Type
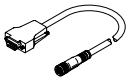	Displacement encoder ELGD-...-M3	Motor controller CMMP-AS and CMMT-AS	5	**1599105**	**NEBM-M12G8-E-5-S1G9-V3**
			10	**1599106**	**NEBM-M12G8-E-10-S1G9-V3**
			15	**1599107**	**NEBM-M12G8-E-15-S1G9-V3**
			X[1]	**1599108**	**NEBM-M12G8-E-...-S1G9-V3**

1) Max. cable length: 25 m.

Ordering data – Adapter

	Description	Part no.	Type
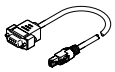	Required in combination with the servo drive CMMT-AS as adapter between encoder cable NEBM-M12G8-...-V3 and interface X3 (position encoder 2)	**8106112**	**NEFM-S1G9-K-0.5-R3G8**