THIS DRAWING IS UNPUBLISHED. RELEASED FOR PUBLICATION -.- .
© COPYRIGHT - BY TYCO ELECTRONICS CORPORATION. ALL RIGHTS RESERVED.

LOC	DIST
CM	00

REVISIONS

P	LTR	DESCRIPTION	DATE	DWN	APVD
	H	REVISED PER 0G3B-0888-03	29-JAN-04	SH	DC

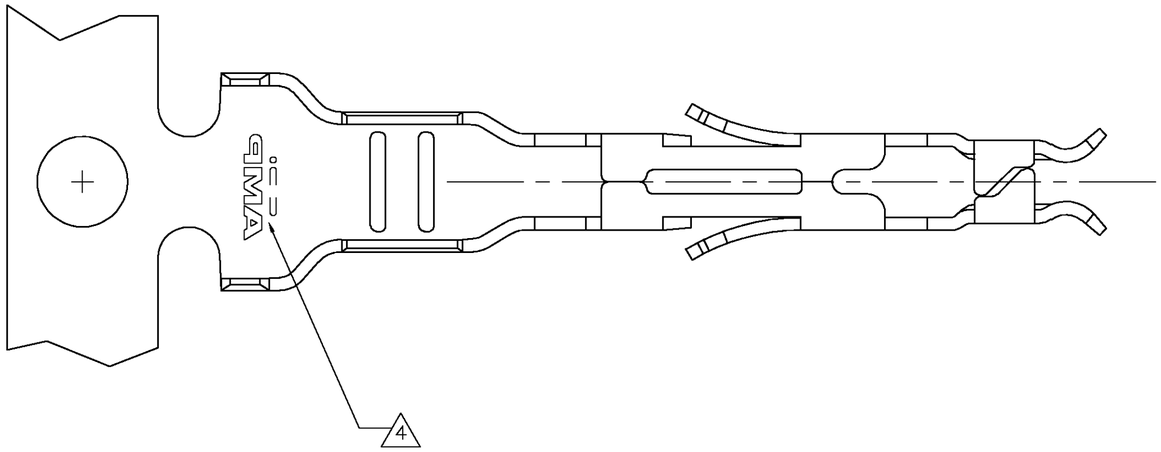

1. HAND TOOL PART NUMBER 734202-2.
2. EXTRACTION TOOL PART NUMBER 188688-1
3. LOOSE PIECE CONTACT
4. AMP TRADEMARK
5. MATERIAL PHOSPHOR BRONZE PRETINNED 1-3μm
6. CUT OFF DIMENSION FOR LOOSE PIECE CONTACT 0.5 [.02] MAXIMUM.
7. WIRE RANGE: 0.30-0.87mm^2 [.012-.034in^2], (18-22 AWG).
8. INSULATION RANGE: 1.50-2.40 [.059-.094] DIAMETER.

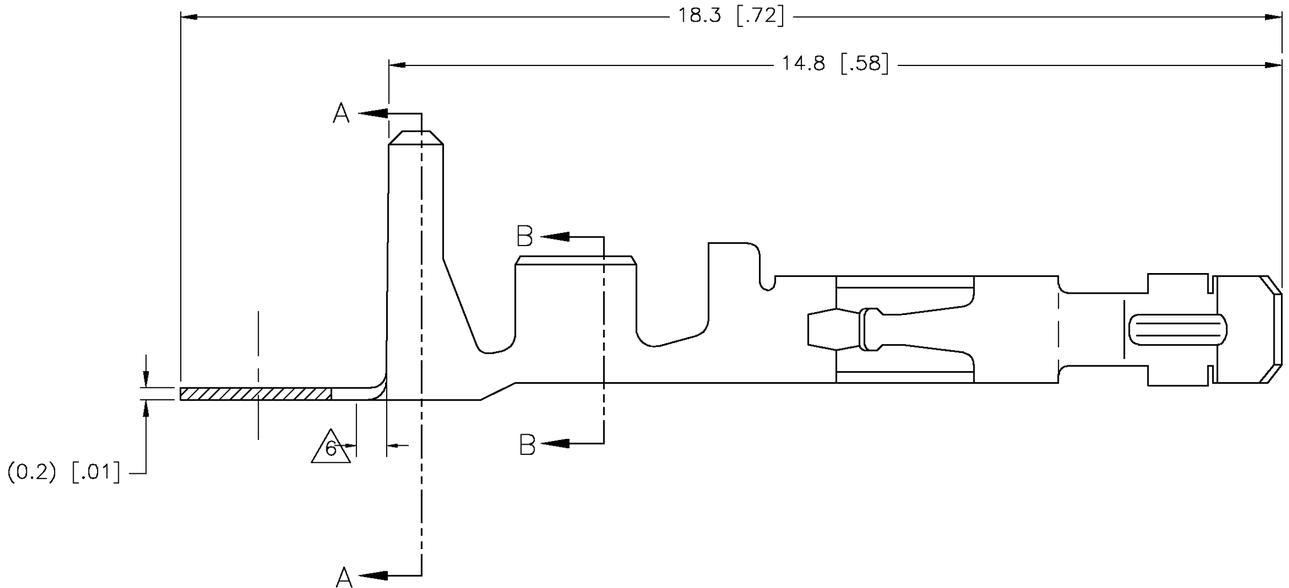

SECTION A-A
SCALE 14:1

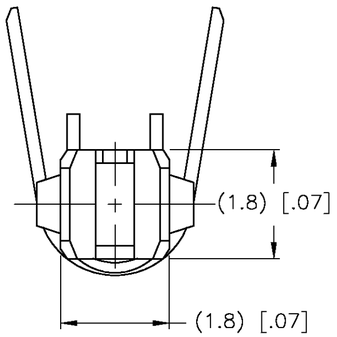

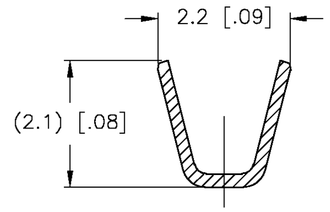

SECTION B-B
SCALE 14:1

DIRECTION OFF TOP OF REEL

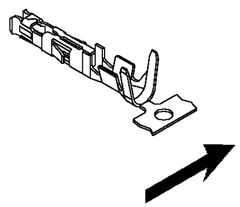

3	PRETINNED	PHOSPHOR BRONZE	1-106529-2
	PRETINNED	PHOSPHOR BRONZE	106529-2
	FINISH	MATERIAL	PART NUMBER

METRIC

THIS DRAWING IS A CONTROLLED DOCUMENT.

DIMENSIONS: mm [INCHES]

TOLERANCES UNLESS OTHERWISE SPECIFIED:
0 PLC ±
1 PLC ±
2 PLC ± 0.10 [.004]
3 PLC ±
4 PLC ±
ANGLES ±

MATERIAL: SEE CHART
FINISH: SEE CHART

DWN	S. HOOVER	29-JAN-2004
CHK	D. COLEY	29-JAN-2004
APVD	D. COLEY	29-JAN-2004
PRODUCT SPEC		
APPLICATION SPEC		
WEIGHT		

tyco Electronics
Tyco Electronics Corporation
Harrisburg, Pa 17105-3608

NAME: SOCKET CONTACT AMP-DUAC ™

SIZE	CAGE CODE	DRAWING NO	RESTRICTED TO
A2	00779	C-106529	—

CUSTOMER DRAWING | SCALE 14:1 | SHEET 1 OF 1 | REV H

106529

AMP 1471-9 REV 31MAR2000