SIEMENS

Data sheet 3SB3801-0EF3

ENCLOSURE FOR COMMAND DEVICES, 22MM, ROUND, ENCLOSURE MATERIAL PLASTIC, YELLOW TOP PART, WITH PROTECTIVE COLLAR, 1 COMMAND POSITION, A=EMER.-STOP MUSHROOM PUSHBUTTON RED, 40MM, ROT.-TO-UNLATCH MECHANISM, 1NC, 1NC, SCREW TERMINAL, FLOOR MOUNTING, TOP AND BOTTOM 1 X M20 EACH

Enclosure:	
Design of the housing	Enclosure for command and signaling devices with standard equipment
Shape of the enclosure front	Square
Material of the enclosure	plastic
Number of control points	1
Product component	
• protective collar	Yes
Color	
• of top part of the enclosure	yellow
Delivery state	
• as a kit	No
• pre-wired on strip terminal	No
Mounting type of the enclosure	Vertical / horizontal

Actuator:	
Design of the operating mechanism	Emergency stop mushroom pushbutton
Product feature	
• lockout	No
Product expansion optional Light source	No
Color	
• of the actuating element	Red
Material of the actuating element	plastic
Type of unlocking device	rotate-to-unlatch mechanism

Front ring:

Changes preserved
© Copyright Siemens AG

Product component front ring	No

Holder:	
Material of the holder	Plastic

Contact block/ lampholder:	
Number of lampholders	0
Number of switching elements	2

General technical data:	
Product function	
• positive opening	Yes
• EMERGENCY OFF function	Yes
• EMERGENCY STOP function	Yes
Product component	
• Light source	No
• Stand/pedestal	No
Type of voltage	
• of the operating voltage	AC/DC
Vibration resistance	
• acc. to IEC 60068-2-6	20 ... 200 Hz: 5g
Protection class IP	IP65
Equipment marking	
• acc. to DIN 40719 extended according to IEC 204-2 acc. to IEC 750	S
• acc. to DIN EN 61346-2	S
• acc. to DIN EN 81346-2	S
Operating voltage	
• with AC	
— at 50 Hz Rated value	5 ... 400 V
— at 60 Hz Rated value	5 ... 300 V
• **for DC Rated value**	
— maximum	230 V
— minimum	5 V
Operating voltage 1	
• with AC	
— at 50 Hz Rated value	400 V
— at 60 Hz Rated value	300 V
• for DC Rated value	230 V

Auxiliary circuit:	
Number of NC contacts	
• for auxiliary contacts	2
Number of NO contacts	
• for auxiliary contacts	0

Changes preserved
© Copyright Siemens AG

Number of CO contacts	
• for auxiliary contacts	0
Operating current at AC-12	
• at 24 V Rated value	10 A
• at 48 V Rated value	10 A
• at 110 V Rated value	10 A
• at 230 V Rated value	10 A
• at 400 V Rated value	10 A
Operating current at AC-15	
• at 230 V Rated value	6 A
• at 400 V Rated value	3 A

Connections/ Terminals:

Type of electrical connection on enclosure	Cable routing above, below / left, right, each 1 x M20

Safety related data:

B10 value with high demand rate acc. to SN 31920	100 000
Proportion of dangerous failures	
• with low demand rate acc. to SN 31920	20 %
• with high demand rate acc. to SN 31920	20 %
T1 value for proof test interval or service life acc. to IEC 61508	20 y

Ambient conditions:

Ambient temperature	
• during operation	-25 ... +70 °C
• during storage	-40 ... +80 °C

Installation/ mounting/ dimensions:

Mounting type	
• of contact blocks, socket, and accessories	Floor mounting
Height	85 mm
Width	85 mm
Depth	106 mm
Shape of the installation opening	round
Mounting diameter	22 mm

Accessories:

Number of labels	0
Number of backing plates	0
Product component holder for 3 switching elements	No

Certificates/ approvals:

Changes preserved
© Copyright Siemens AG

General Product Approval		Declaration of Conformity	Test Certificates	Shipping Approval	
UL		EG-Konf.	Special Test Certificate	ABS	DNV

Shipping Approval		other	
LRS	PRS	Confirmation	Environmental Confirmations

Further information

Information- and Downloadcenter (Catalogs, Brochures,…)
http://www.siemens.com/industrial-controls/catalogs

Industry Mall (Online ordering system)
http://www.siemens.com/industrymall

Cax online generator
http://support.automation.siemens.com/WW/CAXorder/default.aspx?lang=en&mlfb=3SB38010EF3

Service&Support (Manuals, Certificates, Characteristics, FAQs,...)
https://support.industry.siemens.com/cs/ww/en/ps/3SB38010EF3

Image database (product images, 2D dimension drawings, 3D models, device circuit diagrams, EPLAN macros, ...)
http://www.automation.siemens.com/bilddb/cax_de.aspx?mlfb=3SB38010EF3&lang=en

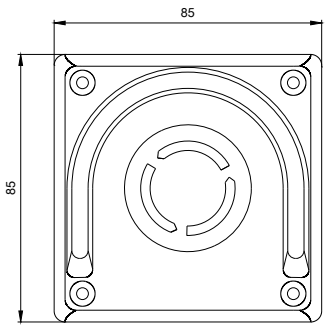

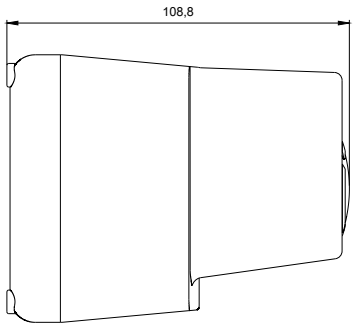

last modified: 28.04.2015

Changes preserved
© Copyright Siemens AG