THIS DRAWING IS UNPUBLISHED. RELEASED FOR PUBLICATION -,- -
© COPYRIGHT - By - ALL RIGHTS RESERVED.

LOC	DIST
GP	00

REVISIONS

P	LTR	DESCRIPTION	DATE	DWN	APVD
	W	REVISED PER ECO-12-022391	04JAN2013	CJV	SLB

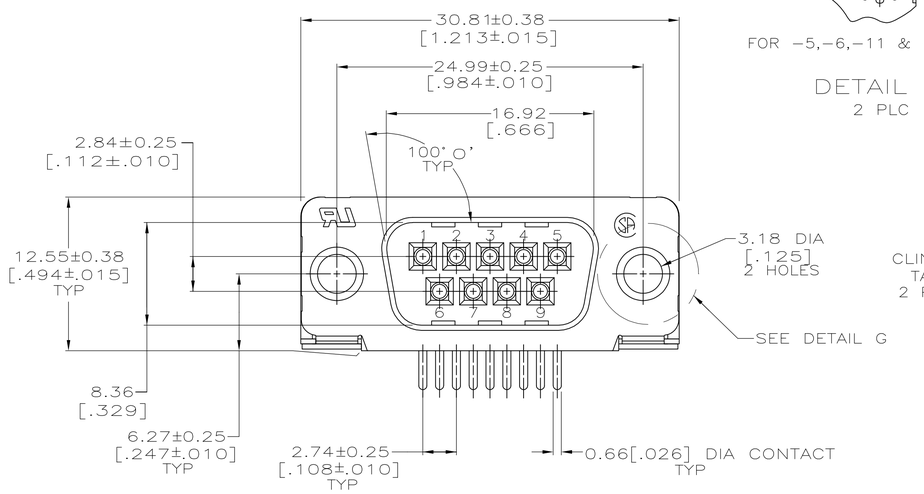

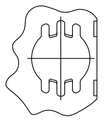

FOR -5,-6,-11 & -12 ONLY

DETAIL G
2 PLC

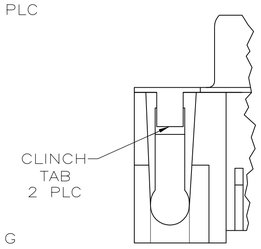

DETAIL B

1. HOUSING: BLACK NYLON OR POLYESTER, FLAME RETARDANT, UL 94V-0 RATED, GLASS FILLED
   CONTACTS: BRASS
   SHELLS: CARBON STEEL
   EYELETS: BRASS
2. GOLD FLASH ON THE MATING SURFACES, 2.54µm[.000100] MIN TIN OR TIN-LEAD PLATE ON THE SOLDER END, 1.27µm[.000050] MIN NICKEL UNDERPLATE ON THE ENTIRE CONTACT.
3. 0.76µm[.000030] MIN GOLD PLATE ON THE MATING SURFACES, 2.54µm[.000100] MIN TIN OR TIN-LEAD PLATE ON THE SOLDER END, 1.27µm[.000050] MIN NICKEL UNDERPLATE ON THE ENTIRE CONTACT
   -OR-
   GOLD FLASH OVER PALLADIUM-NICKEL PLATE, 0.76µm[.000030] MIN TOTAL ON THE MATING SURFACES, 2.54µm[.000100] MIN TIN OR TIN-LEAD PLATE ON THE SOLDER END, 1.27µm[.000050] MIN NICKEL UNDERPLATE ON THE ENTIRE CONTACT.
4. SHELLS: 2.54µm[.000100] MIN TIN OVER 1.27µm[.000050] MIN COPPER
   EYELETS: 5.08µm[.000200] MIN TIN OVER COPPER FLASH
   CONTACTS: SEE TABLE
   SCREWLOCK AND INSERT: CLEAR CHROMATE
5. THIS CONNECTOR IS COMPATABLE WITH TYPICAL SURFACE MOUNT SOLDERING PROCESSES CONSISTING OF 418°F MAX TEMPERATURE AND 3 MINUTES MAX EXPOSURE TIME.
6. SCREWLOCKS AND LOCKWASHERS FOR 1-747250-3 ASSEMBLY WILL BE BULK PACKED AND SHIPPED WITH ASSEMBLIES.
7. OBSOLETE PART NUMBER.
8. SUPERSEDED BY 747250-2.
9. SUPERSEDED BY 747250-6.

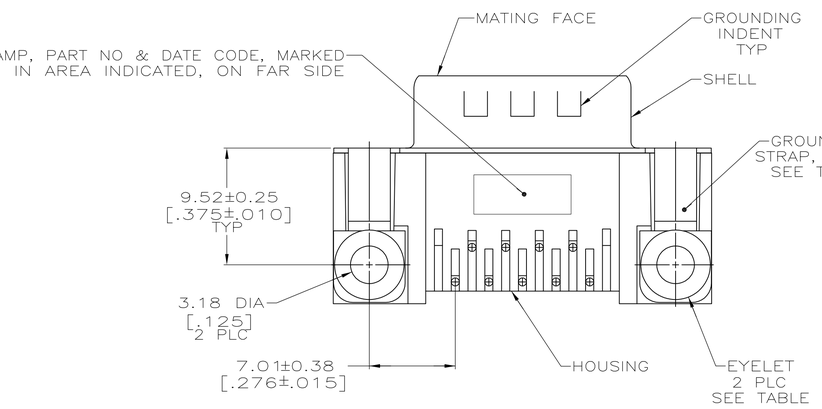

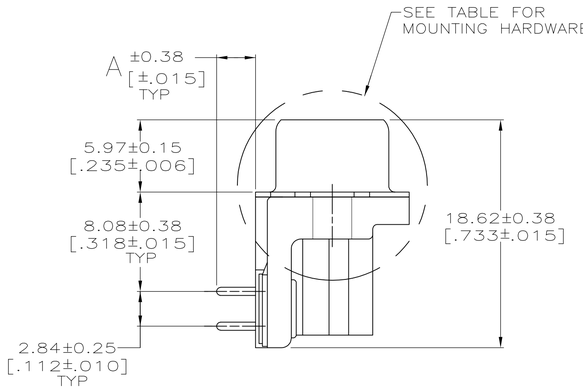

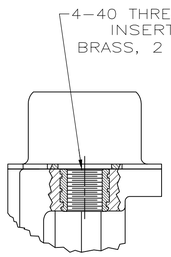

DETAIL C

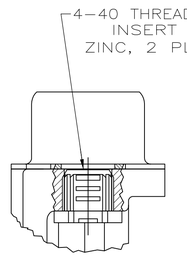

DETAIL D

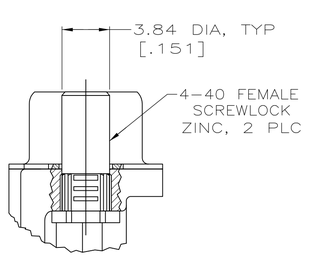

DETAIL E

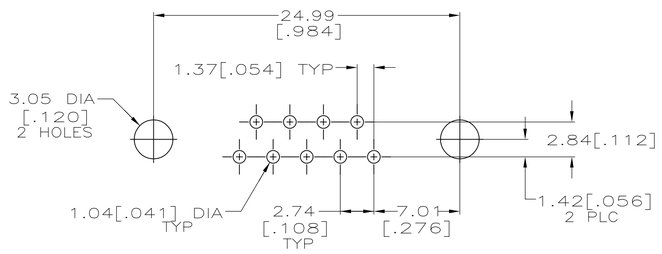

P.C. BOARD MOUNTING DIMENSIONS

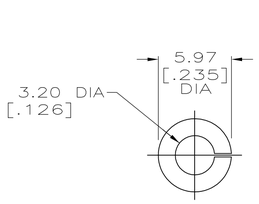

LOCKWASHER: QTY 2
CARBON STEEL, ZINC
PLATED CLEAR CHROMATE

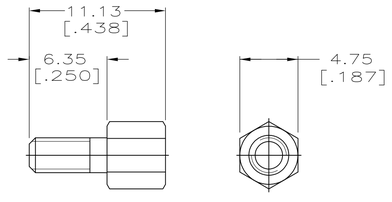

4-40 FEMALE SCREWLOCK: QTY 2
CARBON STEEL; 3.81µm[.000150]
MIN ZINC PLATED CLEAR CHROMATE

6 DETAIL F

5 3.56 [.140]	YES	YES	-	3	7 1-747250-5
3.18 [.125]			SEE DETAIL C	3	7 1-747250-4
			SEE DETAILS D AND F	3	7 1-747250-3
	NO SEE DETAIL B	NO	SEE DETAIL E	3	7 1-747250-2
				2	7 1-747250-1
			SEE DETAIL D	3	7 1-747250-0
				2	7 747250-9
			-	3	7 747250-8
				2	7 747250-7
	YES	YES	SEE DETAIL E	3	747250-6
				2	9 747250-5
			SEE DETAIL D	3	747250-4
				2	7 747250-3
			-	3	7 747250-2
				2	8 747250-1
A	GROUNDING STRAPS	EYELETS	MOUNTING HARDWARE	CONTACT FINISH	PART NUMBER

THIS DRAWING IS A CONTROLLED DOCUMENT.
DIMENSIONING AND TOLERANCING PER ASME Y14.5M-2009

DIMENSIONS: mm [INCHES]

TOLERANCES UNLESS OTHERWISE SPECIFIED:
0 PLC ± -
1 PLC ± -
2 PLC ± 0.13[.005]
3 PLC ± -
4 PLC ± -
ANGLES ± 2° 0'

MATERIAL 1
FINISH 4

DWN W.G. LENKER 05 OCT 89
CHK R. STONE 06 FEB 90
APVD M.D. GALLOWAY 06 FEB 90
PRODUCT SPEC 108-40025
APPLICATION SPEC 114-40010
WEIGHT -

TE Connectivity

NAME
PLUG ASSEMBLY, SIZE 1, 9 POSITION,
RIGHT ANGLE, FRONT METAL SHELL,
.318 SERIES, AMPLIMITE® HD-20

SIZE	CAGE CODE	DRAWING NO	RESTRICTED TO
A1	00779	C-747250	-

CUSTOMER DRAWING | SCALE 4:1 | SHEET 1 OF 1 | REV W