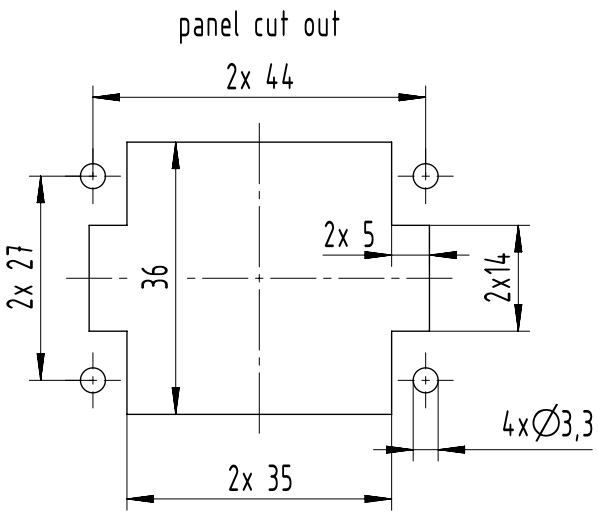

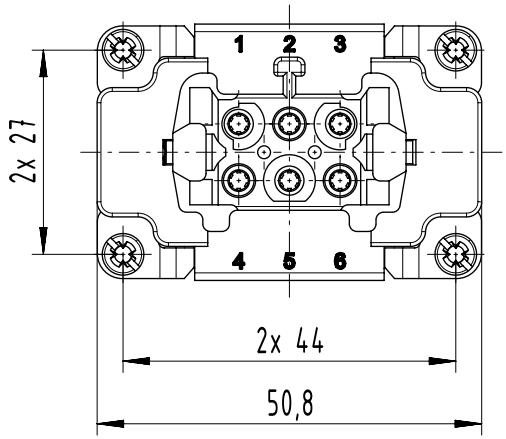

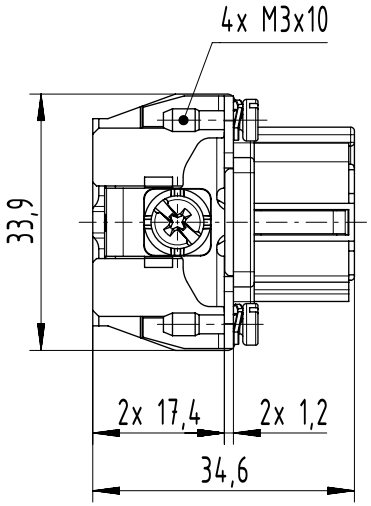

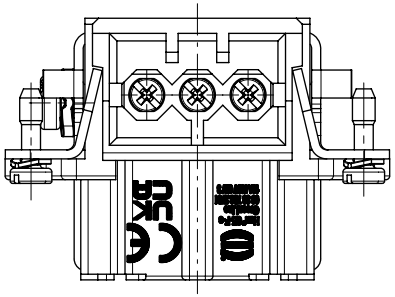

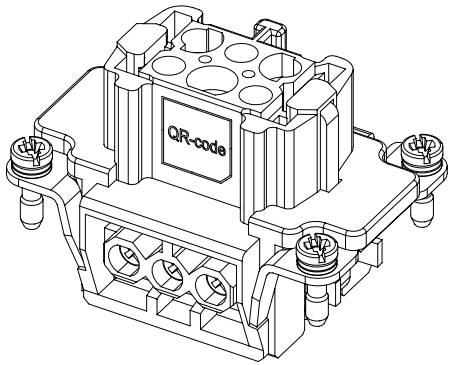

All Dimensions in mm Original Size DIN A4	Scale 1:1	Free size tol.		Ref. Sub.	
All rights reserved Department EL PD	Created by hollert	Inspected by riepe	Standardisation	Date 27-Nov-2024	State 40 - Released
HARTING D-32339 Espelkamp	Title Han E6_I_SMC_F_SCT_Ag_GreenLine				Doc-Key / ECM-Nr. DS00243164
	Type TB	Design Number DS00243164	SAP Mat. Number 09337062701	Rev. C	Page 1/1

A4