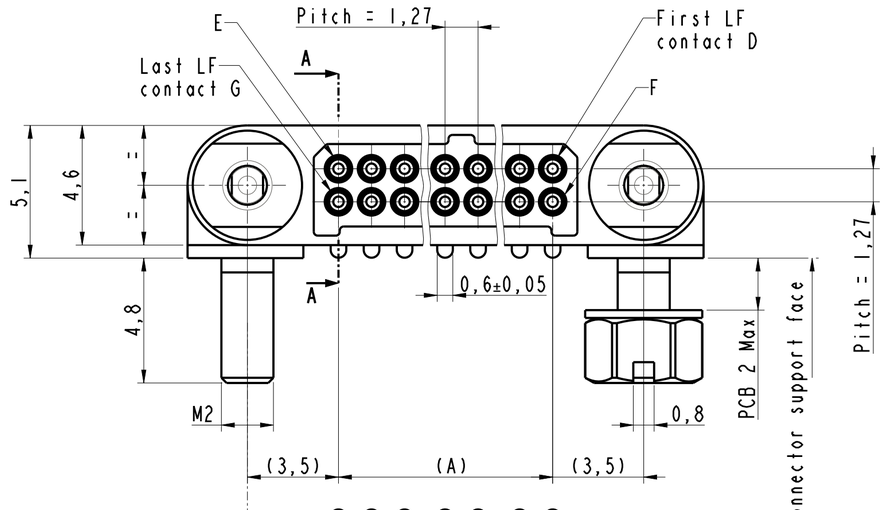

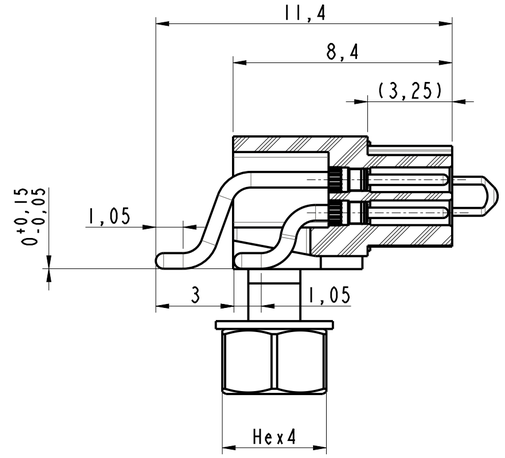

Section A-A

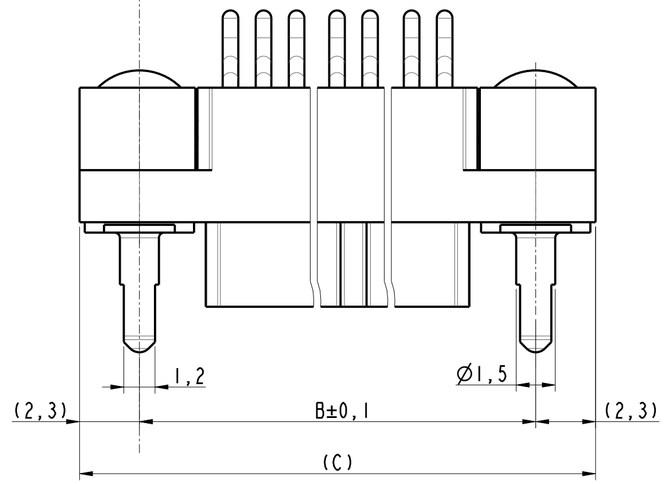

PCB Layout

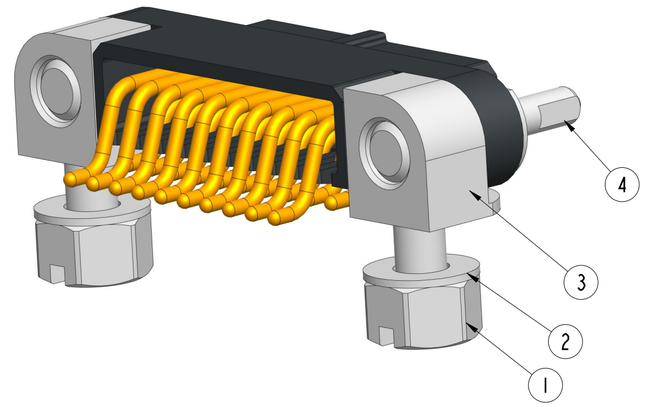

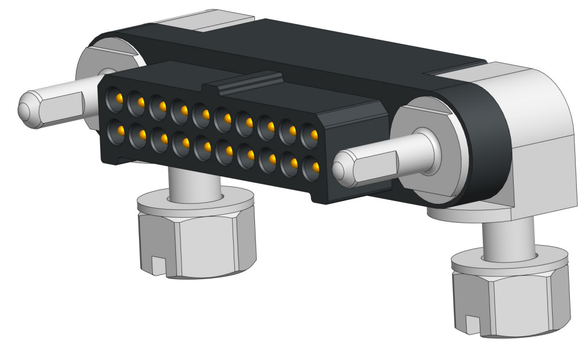

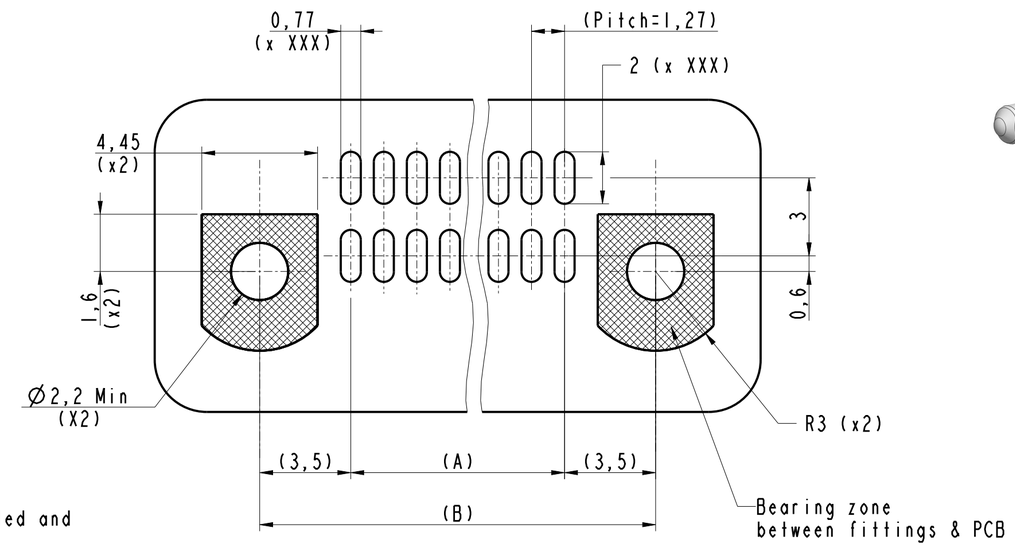

LF Contacts number	Distance in mm between axes		Length in mm	LF Contacts reference mark number			
XXX	A	B	C	D	E	F	G
004	1,27	8,27	12,87	1	2	3	4
006	2,54	9,54	14,14	1	3	4	6
008	3,81	10,81	15,41	1	4	5	8
010	5,08	12,08	16,68	1	5	6	10
012	6,35	13,35	17,95	1	6	7	12
014	7,62	14,62	19,22	1	7	8	14
016	8,89	15,89	20,49	1	8	9	16
018	10,16	17,16	21,76	1	9	10	18
020	11,43	18,43	23,03	1	10	11	20
022	12,7	19,7	24,3	1	11	12	22
024	13,97	20,97	25,57	1	12	13	24
026	15,24	22,24	26,84	1	13	14	26
028	16,51	23,51	28,11	1	14	15	28
030	17,78	24,78	29,38	1	15	16	30
032	19,05	26,05	30,65	1	16	17	32
034	20,32	27,32	31,92	1	17	18	34
036	21,59	28,59	33,19	1	18	19	36
038	22,86	29,86	34,46	1	19	20	38
040	24,13	31,13	35,73	1	20	21	40
042	25,4	32,4	37	1	21	22	42
044	26,67	33,67	38,27	1	22	23	44
046	27,94	34,94	39,54	1	23	24	46
048	29,21	36,21	40,81	1	24	25	48
050	30,48	37,48	42,08	1	25	26	50
052	31,75	38,75	43,35	1	26	27	52
054	33,02	40,02	44,62	1	27	28	54
056	34,29	41,29	45,89	1	28	29	56
058	35,56	42,56	47,16	1	29	30	58
060	36,83	43,83	48,43	1	30	31	60

Notes:

1 - "XXX"to be replaced by the number of LF contacts.

2 - Connector delivered with part 1 & 2 of the fittings not assembled and part 3 & 4 of the fittings assembled.

3 - General tolerance ±0,2

EXPORT CONTROL CLASSIFICATION NOT CONTROLLED/EAR99

Information contained in this document is not subject to Export Control Regulations of the European Union, USA or other countries. Each recipient of this document is responsible for ensuring that transfer or use of any information contained in this document complies with all relevant Export Control regulations and EAR99 regulations.

IN THE CONSTANT PURPOSE OF IMPROVING ITS PRODUCTS, Amphenol Socapex RESERVES THE RIGHT TO MODIFY ANY DIMENSION OR CHARACTERISTICS.
FM.NPD.0037.THYEZ.PUNE rev C

MICRO HDAS
Male connector
MHDAS 2 M XXX R E11

DRAWN BY : S Suryavanshi	UPDATED BY: -	LAST APPROVED BY: M Gervais
ALL DIMENSIONS ARE IN MM	AMPHENOL SOCAPEX	ORIGINAL DRAWING DATE : 06/12/23 / CONFIGURATION DATA ARE AVAILABLE IN PDM
SCALE : 6	B.P. 29 74311 THYEZ CEDEX	REV : A / PAGE : 1/1
		169-PLC-1874-00