REV.	ECN NO.	DATE	SIGN	DESCRIPTION

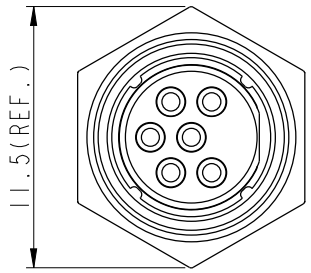

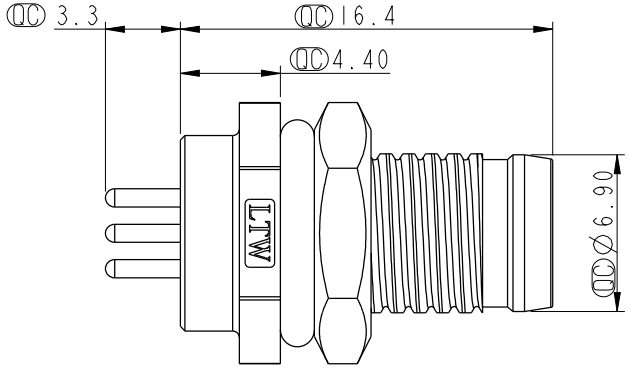

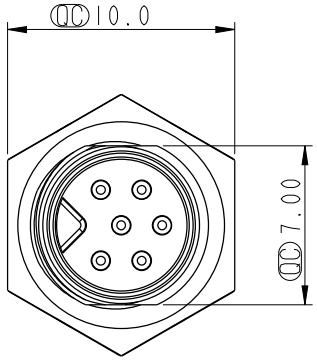

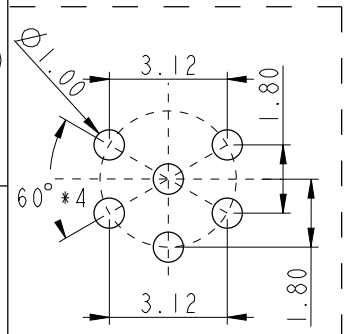

Recommend PCB Layout

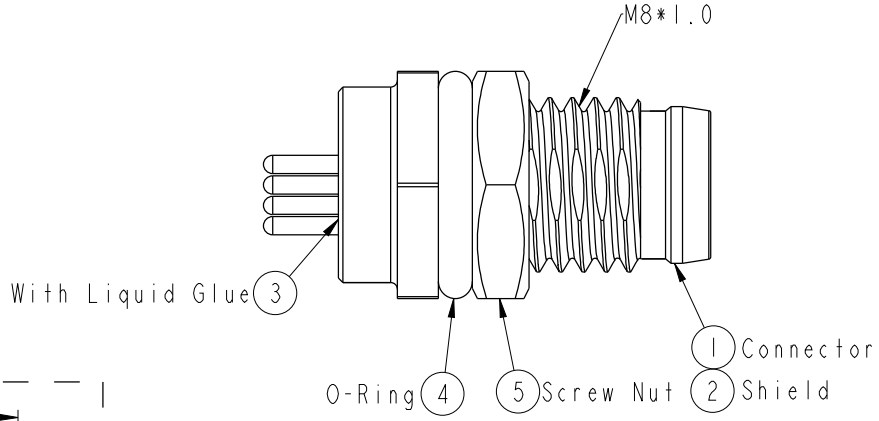

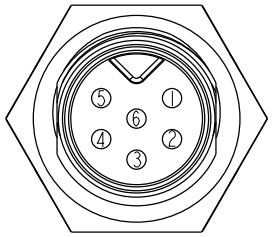

Pin Assignment
Front View

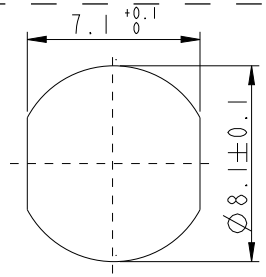

Recommended
Panel Cut-Out

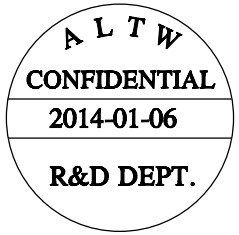

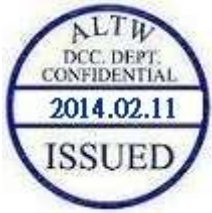

Note:
* QC Important Dimension.
* Waterproof Rate: IP67.
* Housing: Nylon+GF, Black.
* Male Pin: Copper Alloy, Gold Plated.
* Shield: Zinc Alloy, Nickel Plated.
* Screw Nut: Copper Alloy, Nickel Plat
* O-Ring: EPDM, Black.
* For Panel Thickness Max 3.0mm.
* Nut Torque: 4~6 kgf.cm.

UNIT: mm

TOLERANCE
.X ±0.25
.XX ±0.1
.XXX ±0.05
ANGLES ±1°

TITLE: M8 6Pin Panel M Conn. M Pin			
SCALE: 3:1	SIZE: A4	SHEET: 1 OF 1	
REV.: A	WC-REV.: A.3	QC: Inspection item	

Amphenol LTW
安費諾亮泰企業股份有限公司

ITEM NO: 8A-06PMMP-SF7001	DRAWN BY: Mila	DATE: 2014-01-0
DWG NO: 8A-06PMMP-SF7001	CHECKED BY: Jimmy	DATE: 2014-01-0
CUSTOMER: ALTW	APPROVED BY: Jerry	DATE: 2014-01-0

FMW10702-