8B0M0250HC00.000-1

1 General information

- Pioneering power distribution system
- Integrated distribution of power and auxiliary power supply
- Shockproof
- Option slots possible

2 Order data

Order number	Short description	Figure
	Cold-plate mounting	
8B0M0250HC00.000-1	ACOPOSmulti mounting plate with backplane, 25 slots, AS, cold plate mounting, 75 mm² and 22 mm², complete	
	Optional accessories	
	Accessory sets	
8BXW000.0000-00	Accessory set: 2x fitting for mounting plate 8B0MxxxxHCxx.xxx-x and 8EMCxxxx000.0000-1, angled	
8BXW001.0000-00	Accessory set: 2x fitting for mounting plate 8B0MxxxxHCxx.xxx-x and 8EMCxxxx000.0000-1, straight	

Table 1: 8B0M0250HC00.000-1 - Order data

3 Technical data

Order number	8B0M0250HC00.000-1
General information	
Number of slots	25
Cooling and mounting type	Cold plate mounting
Certifications	
CE	Yes
UKCA	Yes
UL	cULus E225616 Power conversion equipment
DC bus connection	
Voltage	
Nominal	750 VDC
Continuous power [1)]	200 kW
Reduction of continuous power depending on installation elevation	
Starting at 500 m above sea level	20 kW per 1000 m
Cross section	
DC+, DC-	72 mm²
PE	72 mm²
24 VDC auxiliary supply	
Voltage	25 VDC ±1.6%
Continuous power [1)]	1500 W

Table 2: 8B0M0250HC00.000-1 - Technical data

Order number	8B0M0250HC00.000-1
Reduction of continuous power depending on installation elevation	
Starting at 500 m above sea level	150 W per 1000 m
Cross section	
24 VDC, COM	21.3 mm²
Operating conditions	
Permissible mounting orientations	
Hanging vertically	Yes
Horizontal, face up	Yes
Standing horizontally	No
Installation elevation above sea level	
Nominal	0 to 500 m
Maximum [2]	4000 m
Pollution degree per EN 61800-5-1	2 (non-conductive pollution)
Overvoltage category per EN 61800-5-1	III
Evenness of mounting surface	Evenness of 1 mm over the entire mounting surface
Flow rate	
Minimum	3 l/min [3]
Maximum	6 l/min [3]
Pressure drop depending on flow volume	
3 l/min	Typ. 0.3 bar
6 l/min	Typ. 0.7 bar
Test pressure	10 bar for 1 minute, air inside, water outside
Max. continuous pressure [4]	5 bar
Max. permissible return temperature	60°C
Degree of protection per EN 60529	IP20
Ambient conditions	
Temperature	
Operation	
Nominal	5 to 40°C
Maximum [5]	55°C
Storage	-25 to 55°C
Transport	-25 to 70°C
Relative humidity	
Operation	5 to 85%
Storage	5 to 95%
Transport	Max. 95% at 40°C
Mechanical properties	
Dimensions [6]	
Width	1378 mm
Height	378 mm
Depth	17 mm
Weight	23.5 kg

Table 2: 8B0M0250HC00.000-1 - Technical data

1) Valid under the following conditions: 40°C ambient temperature, installation elevation <500 m above sea level.
2) Continuous operation of ACOPOSmulti mounting plates at an installation elevation of 500 m to 4000 m above sea level is possible when taking the specified reduction in continuous power into account. Requirements that go beyond this must be arranged with B&R.
3) Valid under the following conditions: Mounting plate with max. 27 slots and tap water as coolant. Values vary depending on the coolant and/or connection fitting being used!
4) The requirements of the complete system (tubing, heat exchangers, recooling systems, etc.) as well as any necessary application-specific requirements must be taken into account.
5) Continuous operation of ACOPOSmulti mounting plates at ambient temperatures from 40°C to max. 55°C is possible when taking the specified continuous power reductions into account.
6) The dimensions define the size of the mounting plate. Additional spacing above and below the backplanes must be taken into account for mounting, connections and air circulation.

4 Dimension diagram and installation dimensions

Information:

nnnn indicates the number of slots (0160 equals 16 slots).

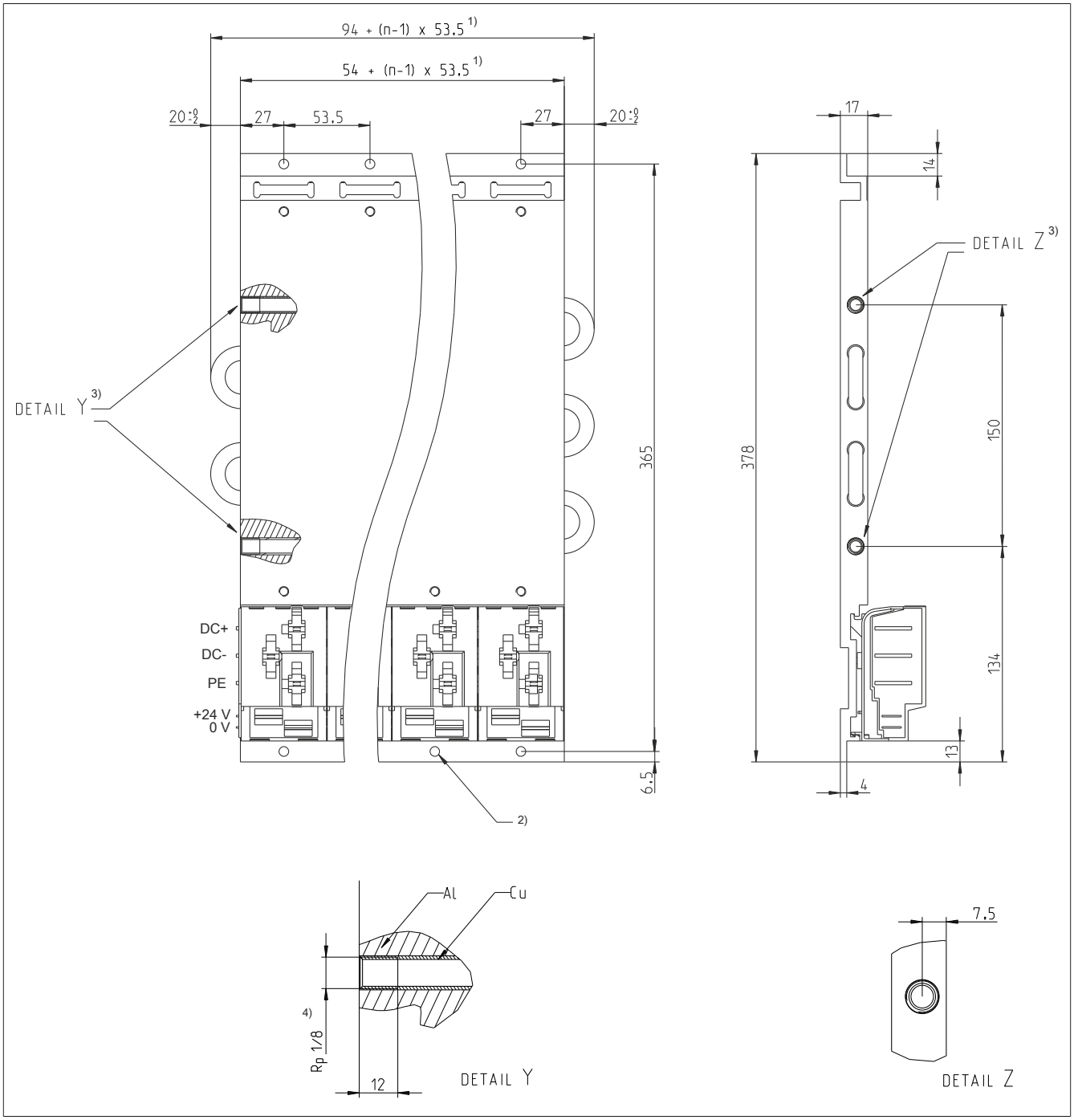

Figure 1: Dimension diagram and installation dimensions

1) n... Number of width units on the mounting plate
2) 2x n mounting holes ø 6 mm
The heads of the fastening screws are not permitted to exceed a height of 6 mm.
3) The maximum tightening torque is 5 Nm.
4) A 1/8 Rp thread is cut into the copper tube at the factory. Due to the mechanical construction (copper tube pressed in aluminum), the finished threads have a form similar to Rc 1/8 per EN 10226-2.

Information:

Valves in cooling systems must in principle be thread-sealed with respect to the coolant. This must preferably be done using suitable liquid-sealing agents or metal-sealing functions. Suitable sealing agents are Teflon tape or LOCTITE 5331, for example.

Information:

B&R recommends using ACOPOSmulti 8B0MnnnnHC00.000-1 mounting plates with ACOPOSmulti 8BXW accessory sets (fittings with tapered R 1/8 Whitworth male pipe thread per EN 10226-1) for the water connections for inlet flow and return flow.

Caution!

B&R has tested and approved the production of the water connection for inlet flow and return flow of 8B0MnnnnHC00.000-1 mounting plates with fittings with tapered R 1/8 Whitworth male pipe thread per EN 10226-1.

The use of other fittings (e.g. with cylindrical external pipe thread) can result in increased effort in sealing the water connections and is therefore the responsibility of the user.