Product Data Sheet

LH-ALTH 127K-FI

Pressed steel swivel castor, heavy duty design, with top plate fitting, with brake system 'stop-fix', heavy duty wheel, with Blickle Extrathane® polyurethane tread, with aluminium wheel centre

EAN 4047526473969
ID 473967
Customs tariff number 87169090

Made in Germany

Bracket: LH series
- strong pressed steel, zinc-plated, blue-passivated, Cr6-free
- heavy fork and top plate
- double ball bearing in the swivel head
- bolted and secured central kingpin, extremely strong
- particularly resistant to shocks and impact due to **four specially-shaped, hardened bearing seats**

Wheel: ALTH series
- tread: high-quality polyurethane elastomer Blickle Extrathane®, hardness 92 Shore A, colour yellow, non-marking, non-staining
- wheel centre: die-cast aluminium, colour silver grey

Blickle Extrathane®

Other features:
- high chemical resistance to many aggressive substances
- operating temperature: -20 °C to +70 °C, temporarily up to +90 °C, reduced load capacity over +40 °C

Tread and tyre hardness
92 Shore A

Rolling resistance
very good

Wear resistance
excellent

Operating noise / floor surface preservation
good

Technical data:

Wheel Ø (D)		125 mm
Wheel width		54 mm
Load capacity at 4 km/h		750 kg
Load capacity (static)		1,875 kg
Bearing type		ball bearing
Total height (H)		170 mm
Mounting type		top plate
Plate size		140 x 110 mm
Bolt hole spacing		105 x 75–80 mm
Bolt hole Ø		11 mm
Offset (F)		58 mm
Temperature resistance min		-20 °C
Temperature resistance max		70 °C
Tread and tyre hardness		92 Shore A
Unit weight		4.1 kg
Non-marking		✓
Non-staining		✓
Antistatic		✗
ESD		✗
Electrically conductive		✗
Corrosion-resistant		✗
Heat-resistant		✗

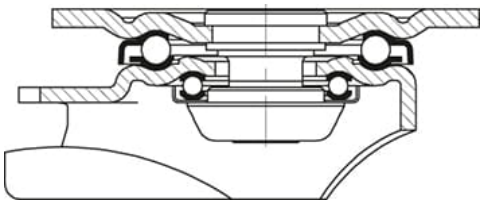

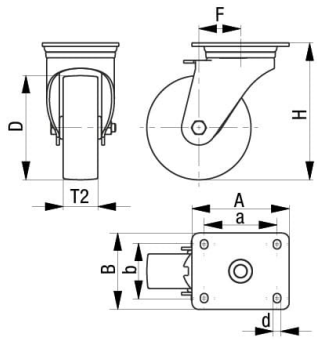

Tread hydrolysis-resistant		×
Suitable for autoclaves		×
Suitable for machine washing		×

Product references

Corresponding fixed castor BH-ALTH 127K

Corresponding swivel castor LH-ALTH 127K

Wheel used ALTH 127/20K