Technical data

NUP208EAT2XU

Single row cylindrical roller bearings

Single row cylindrical roller bearing, locating, separable, polyamide cage

ULTAGE

VISUAL (S)

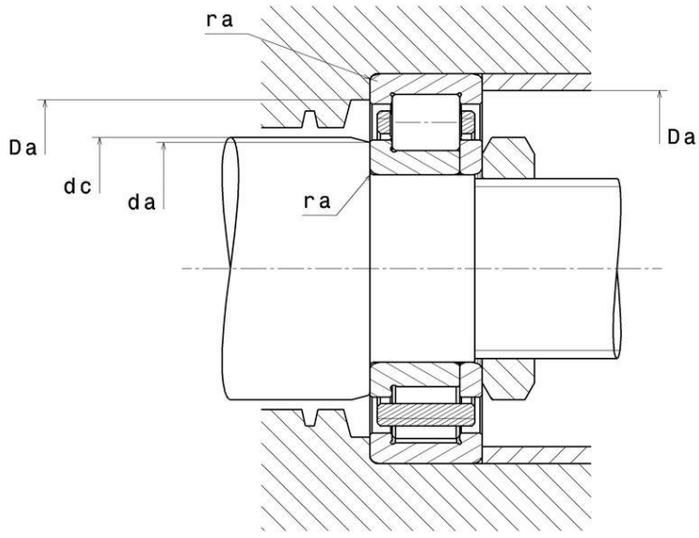

NUP208EAT2XU

Single row cylindrical roller bearings

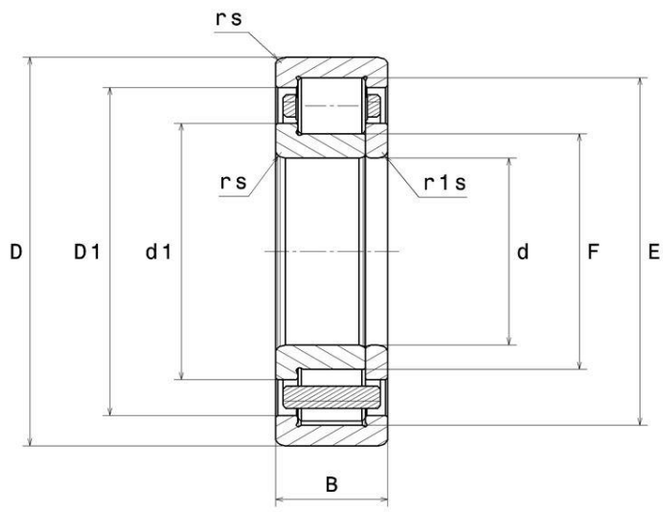

PRODUCT DEFINITION	
Brand	NTN
d - Internal diameter	40 mm
D - External diameter	80 mm
B - Bearing/Inner ring width	18 mm
E - Upper roller diameter	71,5 mm
F - Under roller diameter	49,5 mm
d1 - IR flange outer diameter	53,9 mm
rs - Min fillet radius	1,1 mm
r1s - Min fillet radius	1,1 mm
Radial clearance class	CN
Mass	0,388 kg

PRODUCT PERFORMANCE	
C - Dynamic load	66000000 mN

NUP208EAT2XU
Single row cylindrical roller bearings

PRODUCT PERFORMANCE	
C0 - Static load	55500000 mN
Cu - Fatigue limit load	6750000 mN
N lim - Oil lubrication limit speed	72000 °/s
N lim - Grease lubrication limit speed	51000 °/s
Tmin - Min operating temperature	253,15 °K
Tmax - Max operating temperature	393,15 °K

ABUTMENT	
da min - Min shoulder diameter IR	46,5 mm
dc min - Min inner ring GO diameter	56 mm
Da max - Max shoulder diameter OR	73,5 mm
ra max - Max fillet radius	1 mm
r1a - Max fillet radius	1 mm

INDUSTRY CALCUL FACTORS

Equivalent dynamic radial load

P = Fr

Equivalent static radial load

Po = Fr