REV.	ECN NO.	DATE	SIGN	DESCRIPTION
B	LEN1740209	2017/03/31	Ruru	Change Logo
C	LEN1760194	2017/06/14	Kalman	Correct screw dimension
D	C191705	2019-09-25	Fu	Modify fillets

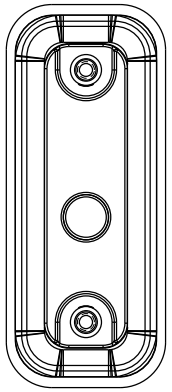

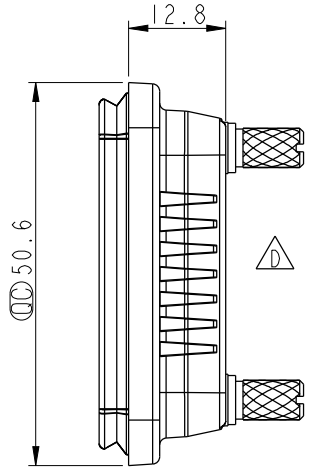

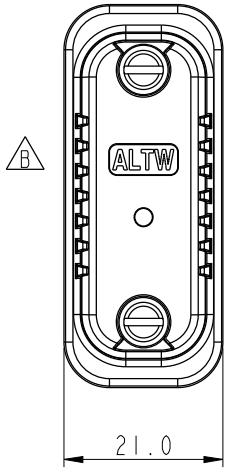

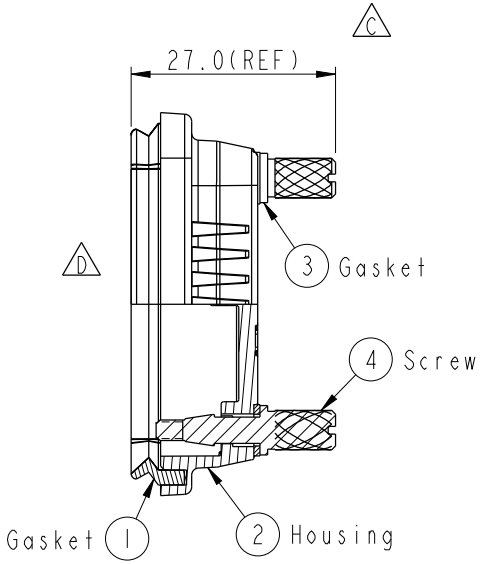

ALTW
CONFIDENTIAL
2019-09-25
R&D DEPT.

Note:
* QC Important Dimension
* Waterproof Rate: IP67
* Housing: Nylon+GF, Black
* Gasket: EPDM, Black
* Screw: Copper Alloy, Nickel Plated
* Screw Torque: 2-4Kgf.cm

UNIT: mm

TOLERANCE
.X ±0.25
.XX ±0.1
.XXX ±0.05
ANGLES ±1°

TITLE: Waterproof Cap, For D-SUB Panel DB15/HD26, Male/Female Conn

SCALE	SIZE	SHEET
1:1	A4	1 OF 1
REV. D	WC-REV. A.1	QC: Inspection item

Amphenol LTW
安費諾亮泰企業股份有限公司

ITEM NO	DRAWN BY	DATE
CAP-WD2CSPA1	Fu	2019-09-2
DWG NO: CAP-WD2CSPA1	CHECKED BY: Feng li	DATE: 2019-09-2
CUSTOMER: ALTW	APPROVED BY: Jerry	DATE: 2019-09-2

W10814-03