eao

Your Expert Partner for **Human Machine Interfaces**

# Series 09

## *Rugged Keypads and Rotary Cursor Controllers.*

www.eao.com/09

Company IATF 16949 certified

# Series 09 Rugged Keypads and RCC.
## *Rugged. Modular. Reliable.*

## Designed for harsh operating conditions and E1 applications with CAN bus integration – *The robust control units with intelligent illumination are ideally suited for use in heavy duty and special vehicle applications.*

Series 09 Rugged Keypads offer high reliability: The modules are designed for E1 applications and are suitable for safety-relevant applications in accordance with DIN EN ISO 13849. The CAN bus connection ensures an intelligent and free programmability. The robust, modular design with sealing levels of up to IP6K9K and the ability to customise and individually select and arrange the keypad legends make these high-quality devices ideally suited for harsh use in heavy duty and special vehicles.

High reliability is crucial to controlling safety-related applications in vehicles and machines – whether in construction vehicles, agricultural machinery or in special and commercial vehicles of various types. Harsh environments and low back panel depth require a robust and compact product design. The actuators and indicators must also be precisely configured, both mechanically and electronically, to suit the respective application. The high-quality Series 09 Rugged Keypads meet these requirements with cutting-edge system integration.

**Robust, innovative design**

Robust and innovative construction is a feature of the Rugged Keypads design. The actuators and indicators are as keypad with 6 or 8 pushbuttons or as rotary conntrollers available and are protected up to IP6K9K. They work reliably at operating temperatures from –40 °C to +85 °C. The low back panel depth and robust clip-in or screw-in mounting allow easy, flexible installation, either vertically or horizontally.

The rotary controllers of the rugged modules also have mechanical protection against unintentional contact and operation.

UX DESIGN AWARDS product 2021

iF

GOOD DESIGN

These high-quality devices also offer excellent tactile feedback, and are clearly visible in daylight and at night thanks to the powerful RGB LED halo and LED symbol illumination. Attractive and freely configurable 4-segment halo button illumination is integrated (depending on the product variant). The customisable illumination – e.g. steady lighting, flashing, pulses, rotations or colour changes – provides the operator with excellent visual feedback, and is combined with a unique design that has received multiple awards for functionality and usability from renowned institutions.

**Functional safety and CAN bus integration**

The Rugged Keypads feature a high reliability and are suitable for safety-relevant applications in accordance with the DIN EN ISO 13849 PLd. Integrated safety features, such as permanent function monitoring or the detection of blocked keys, actively support the customer in integrating the keypads into his security concept. Thanks to the CAN bus integration, the devices are intelligently and easily integrated into a bus system using a Deutsch DT series plug.

The PREMIUM version of the Series 09 Rugged Keypads are equipped with the CANopen Safety protocol and achieve Performance Level D (PLd).

CANopen safety easy to use

**Manufacturing competence and IATF 16949**

The Series 09 modules are produced in our automotive competence centre located in Germany. This allows us to apply years of comprehensive experience as an original equipment manufacturer (OEM) in the automotive industry to the heavy duty and special vehicle markets. At the same time, this offers EAO customers high quality, durable, and intuitive products and services. The development and production process is aligned and executed according to automotive standards (IATF 16949, 100 % product traceability, 100 % EOL testing, etc.).

# Advantages.

- Robust, ergonomic and innovative design sealed up to IP6K9K protection
- Suitable for functional safety applications according to DIN EN ISO 13849
- Intelligent, reliable HMIs with CAN bus integration
- Programmable symbol and 4-segment RGB halo ring illumination for function feedback
- Maximum flexibility through modular design and application-specific configuration options

**Typical applications**
- Special vehicles
  including fire-fighting vehicles, road sweepers, cleaning vehicles, refuse trucks, snow removers and groomers
- Heavy duty vehicles
  including construction and agricultural equipment
- Machines at/around/on the vehicle

**HMI functions**
- Keypad with 6 or 8 pushbuttons
- Rotary Pushbutton (RPB) with rotation function, 360°, 20 detents, infinitely variable
- Rotary Cursor Controller (RCC) with additional tilt function: X/Y, digital with micro switch

The digital joystick function is implemented with a 3-dimensional tilting movement, which enables safe operation even under difficult operating conditions. This actuation method ensures reliable and accurate operation and guards against switching errors.

**Mechanical characteristics**
- Actuating force:
  Pushbutton: approx. 6.5 N or 11 N (depending on variant)
  Rotary Controller: approx. 12 N
- Overload: 250 N
- Mechanical lifetime:
  Pushbutton: up to 2 mio. cycles of operation
  Rotary Controller: 500 000 cycles
- Impact resistance:
  IK07 according to IEC 62262

**Electrical characteristics**
- Operating voltage range: 8–32 VDC
- Quiescent current: < 5 mA
- Load Dump A or B

**Illumination**
- LED symbol illumination
  – Colour: white LED
  – Luminance: approx. 20 cd/m² (dimmable)
- LED halo ring illumination with 4 segments, RGB or single colour LED (depending on the product variant)
  – Luminance: approx. 1 500 cd/m²
- Illumination functions: steady lighting, flashing, pulses, rotations, colour changes
- Halo ring and symbol illumination can be configured independently

**Symbols**
- Symbols in accordance with ISO 7000
- Customer-specific symbols on request

**Connections/interfaces**
- Hardwired
- CAN interface (ISO 11898)
- CAN protocols: CANopen (CiA 401), CAN J1939, CANopen Safety according to EN 50325-5
- Baud rate 125, 250, 500, 1000 kBit/s (with software configurable)

**Ambient conditions**
- Operating temperature: –40 °C … +85 °C
- Storage temperature: –40 °C … +85 °C

**Protection degree**
- Up to IP6K9K* protection, front and rear side (basic version with IP20 on rear side)
- Up to IP6K7 protection (panel/screw-in)
- Up to IP5K4 protection (panel/clip-in)

**Approvals and conformities**
- Developed and produced according to IATF 16949
- DIN EN ISO 13849 PLd (PREMIUM variant)
- E1 ECE R10/ECE R118
  (except PREMIUM variant, RCC and RPB)
- CE

**Further information is available under**
www.eao.com/09

* Under extreme conditions, the symbol inserts may detach. These can be easily reinserted in the keypad. For further information, please refer to the operating instructions.

# *Features and benefits.*

**Sealing protection**
Rugged and resistant according to IP6K9K. Complete protection against water, dust and salt allows cleaning even with increased water pressure. *1

**Symbols**
Interchangeable legends with LED backlit, symbols according to ISO 7000 or customer-specific.

**Mounting options**
Flexible vertical and horizontal installation as well as user-friendly clip-in and screw-in mounting.

**Illumination** *2
Modern, innovative RGB 4-segment halo ring illumination in nearly unlimited variety of colours and visual effects. The symbol illumination and halo ring illumination can be configured independently.

*1 for cleaning instructions, please refer to the operating instructions
*2 depending on product variant

**Diversity of variants**
Keypads with 6 or 8 pushbuttons and rotary cursor controller

**Safety level** *2
Suitable for functional safety applications according to DIN EN ISO 13849 PLd.

**Communication protocols** *2
Intelligent HMI with J1939, CANopen and CANopen Safety integration.

**Design**
Smart, optimised ergonomic design with low panel depth mounting.

**Feedback**
Tactile and visual feedback through optimised haptic design and versatile illumination options.

# *New application possibilities.*

**Status indication with halo segments**
The 4-segment RGB halo ring illumination of the Rugged Keypads is ideal for dynamic status indications such as the display of fill levels or the gradual control of speed. This provides users with constant feedback on the current operating status. The distinguishing colours and the ability to make the four separate RGB segments light up, flash, pulsate or rotate guarantee intuitive operation and the intelligent integration into a customer-specific operating concept.

With the individually programmable LEDs it is possible to define different function layers and individual functions per segment – for even more functionality combined in one HMI.

**Application examples**
- Speed of performance modes
- Lifting and lowering
- Release/hold
- Navigation
- Start/stop
- Menu control/different function levels
- Heating/ventilation

**Customer-specific operating concept**

**Example of a step-by-step operation**

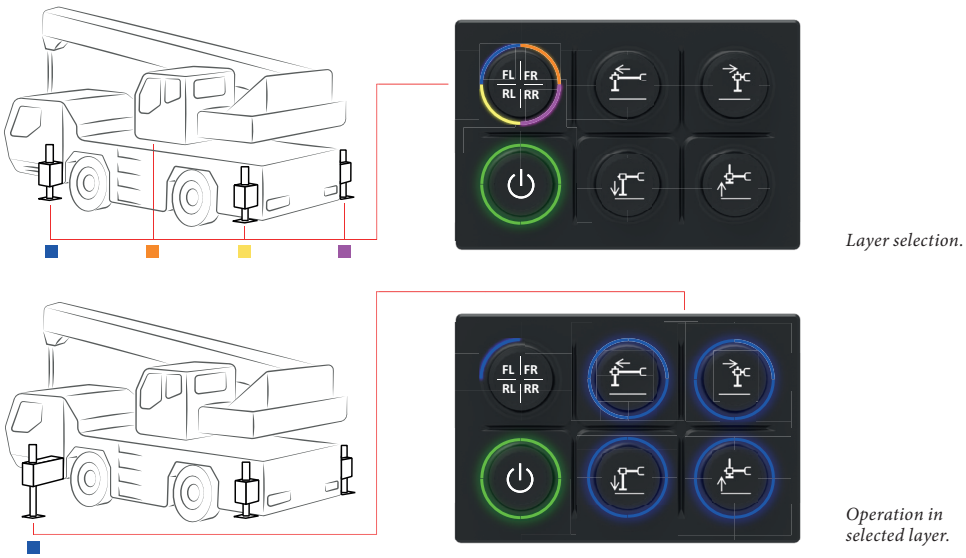

# *Functionally safe. Certified according to DIN EN ISO 13849 PLd.*

Put your trust in the PREMIUM Keypad – developed for maximum safety and to reduce your risks and costs. Whether in heavy-duty or specialty vehicles – wherever vehicle bodies or attachments need to be moved and controlled automatically, safety and reliability are of the utmost importance. EAO's PREMIUM version of the Series 09 Rugged Keypad offers you an intelligent solution for demanding and safety-critical control tasks.

The PREMIUM version of the Series 09 Rugged Keypads meet the highest safety requirements and are developed according to DIN EN ISO13849. They achieve Performance Level D (PLd), which is confi rmed and certifi ed by DEKRA Testing and Certification GmbH. The PREMIUM keypads are specially designed for safety-critical applications and offer optimum safety and reliability.

**Safe communication through CAN Open Safety**

The Series 09 Rugged Keypads PREMIUM variant is equipped with the CANopen Safety protocol, which has been specially developed for safety-critical applications. CANopen Safety complies with international safety standards, in particular DIN EN ISO 13849, and uses various mechanisms for error detection and error correction. Redundancy in communication increases the reliability of the entire system.

In addition to easy integration, the CANopen Safety protocol offers the same advantages as CANopen: flexibility, real-time capability and scalability.

**Maximum lifetime, minimum downtime**

In addition to maximising safety and reliability, the PREMIUM version of the Series 09 impresses with its robust design and long lifetime. The durable and low-maintenance keypads significantly reduce downtime thanks to an integrated safety architecture that helps to prevent errors. This not only ensures smooth operation and increased efficiency in use, but also minimises the risks for operators and manufacturers.

The increased stability of the system has a direct positive effect on your operating costs. In addition, as a customer, you also benefit from reduced development and certification costs when functionally safe components are integrated – for a faster time to market.

**Key product features**

- Integrated safety architecture
- Performance Level d (PLd) according to DIN EN ISO 13849
- CANopen Safety Protocol
- DEKRA certifi ed
- Additional safety features in hardware and software (ButtonStuck Detection, Temperature Management, Permanent Heartbeat)

CANopen®
safety easy to use

# *Optimal for your application.*

**Series 09 variants**

The Series 09 Rugged Keypads are available with 6 and 8 pushbuttons and also in a range of different variants. These keypad variants and the rotary controllers (Rotary Cursor Controller/Rotary Pushbutton) have the flexibility of interchangeable legends, but come with a choice of different illumination features and connector types for example. Depending on the variant, the Rugged Keypads are also suitable for safety-relevant applications.

This wide choice allows designers to specify only the HMI features they actually need for their vehicle or machine application, therefore minimising hardware costs and optimising the scope of their software development – optimal for your application.

| Variants | Halo ring illumination | Communication protocol | Switching element | IP protection | Connector | Switching function/s | Functional safety standard |
|---|---|---|---|---|---|---|---|
| PREMIUM | 4-segment RGB, freely configurable | CANopen Safety | Electro-mechanical switching element | IP6K7 frontside and rear-side | Deutsch DT04-6P | Pushbutton | CANOpen safety protocol and functional safety, certified according to DIN ISO 13849 PLd |
| SUPER | 4-segment RGB, freely configurable | CANopen, J1939 | Electro-mechanical switching element | IP6K7 frontside and rear-side | Deutsch DT04-6P | Pushbutton | Suitable for functional safety applications according to EN ISO 13849 |
| PLUS | Red LED (other colours on request) | CANopen, J1939 | Electro-mechanical switching element | IP6K7 frontside and rear-side | Deutsch DT04-6P | Pushbutton | Suitable for functional safety applications according to EN ISO 13849 |
| BASIC | Red LED | N.A. (hardwired) | Electro-mechanical switching element | IP6K7 frontside | Würth Elektronik WR-MPC3, 16 pins | Pushbutton | Suitable for functional safety applications due to diagnosable switching function for applications according to ISO 26262 and EN ISO 13849 |

| Variants | Halo ring illumination | Communication protocol | Switching element | IP protection | Connector | Switching function/s | Functional safety standard |
|---|---|---|---|---|---|---|---|
| SUPER | 4-segment RGB, freely configurable | CANopen, J1939 | Electro-mechanical switching element | IP6K9K frontside and rear-side | Deutsch DT04-6P | Pushbutton | Suitable for functional safety applications according to EN ISO 13849 |
| PLUS | Red LED (other colours on request) | CANopen, J1939 | Electro-mechanical switching element | IP6K9K frontside and rear-side | Deutsch DT04-6P | Pushbutton | Suitable for functional safety applications according to EN ISO 13849 |
| BASIC | Red LED | N.A. (hardwired) | Electro-mechanical switching element | IP6K9K frontside | Würth Elektronik WR-MPC3, 20 pins | Pushbutton | Suitable for functional safety applications due to diagnosable switching function for applications according to ISO 26262 and EN ISO 13849 |

| Product / Variant | Halo ring illumination | Communication protocol | Switching element | IP protection | Connector | Switching function/s | Functional safety standard |
|---|---|---|---|---|---|---|---|
| RCC SUPER | 4-segment RGB, freely configurable | CANopen, J1939 | Electro-mechanical switching element | IP6K7 frontside and rear-side | Deutsch DT04-6P | Pushbutton: Push RCC: Rotate/ Push/Tilt | Pushbuttons suitable for functional safety applications according to EN ISO 13849 |
| RCC PLUS | Red LED (other colours on request) | CANopen, J1939 | Elektro-mechanisches Schalt-element | IP6K7 Frontseite und Rück-seite | Deutsch DT04-6P | Pushbutton: Push RCC: Rotate/ Push/Tilt | Pushbuttons suitable for functional safety applications according to EN ISO 13849 |
| RPB SUPER | 4-segment RGB, freely configurable | CANopen, J1939 | Electro-mechanical switching element | IP6K7 frontside and rear-side | Deutsch DT04-6P | Pushbutton: Push RPB: Rotate/ Push | Pushbuttons suitable for functional safety applications according to EN ISO 13849 |
| RPB PLUS | Red LED (other colours on request) | CANopen, J1939 | Elektro-mechanisches Schalt-element | IP6K7 Frontseite und Rück-seite | Deutsch DT04-6P | Pushbutton: Push RPB: Rotate/ Push | Pushbuttons suitable for functional safety applications according to EN ISO 13849 |

# *Keypad PREMIUM.*

CANopen safety easy to use

**Functional Safety**
- Developed and certified according to the safety requirements of DIN EN ISO 13849-1:2023
- Performance Level d (PLd)
- MTTFd (in operating years): 183 (Loaddump B)
- PFH: <21 FIT (Loaddump B)
- DC: >90 %

**Mechanical characteristics**
- Actuation force: approx. 6.5 N
- Overload: 250 N
- Mechanical lifetime: up to 2 million cycles of operation
- Impact resistance: IK07 according to IEC 62262

**Electrical characteristics**
- Operating voltage range 8–32 VDC

**Ilumination**
- Halo ring and symbol illumination can be configured independently
- LED symbol illumination
  – Colour: white
  – Luminance: approx. 20 cd/m² (dimmable)
- LED halo ring illumination with four freely configurable segments
  – Multi-colour: RGB LED
  – Luminance: approx. 1 500 cd/m² (dimmable)
- Illumination functions: steady lighting, flashing, pulses, rotations, colour changes
  – Halo and symbol illumination can be configured individually

**Symbols**
- Symbols in accordance with ISO 7000
- Customer-specific symbols on request

**Interfaces**
- CAN interface (ISO 11898)
- CANopen Safety (EN 50325-5)
- Baud rate 125, 250, 500, 1000 kBit/s (software configurable) *1
- Connector Deutsch DT04-6P
- Designed in accordance with the safety requirements of vehicles as per ISO 26262 ASIL B and EN ISO 13849 PL d

**Ambient conditions**
- Operating temperature –40 °C … +85 °C
- Storage temperature: –40 °C … +85 °C

**Protection degree**
- IP6K7 according to ISO 20653
- Up to IP6K7 (panel/screw-in version)
- Up to IP5K4 (panel/clip-in version)

**Dimensions**
(All dimensions in mm)

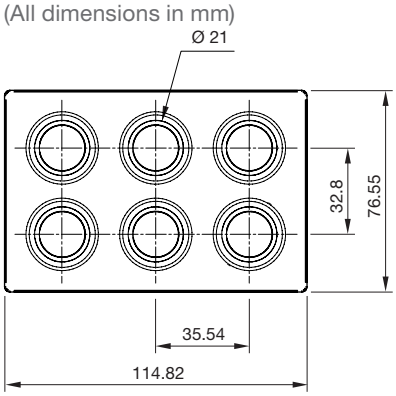


**Mounting cut-out**
(Front plate thickness 1.0 mm … 4.0 mm) *2

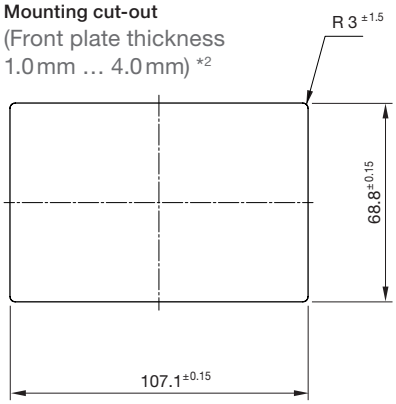


**Mounting**
Clip-in mounting

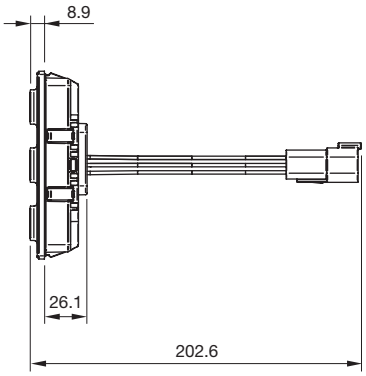


Screw-in mounting

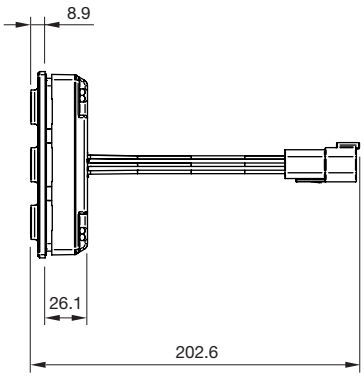


*1 In development
*2 For vibration-proof mounting, a front plate of at least 2 mm thickness is recommended.

# *Keypad SUPER.*

**Mechanical characteristics**
- Actuation force: approx. 6.5 N
- Overload: 250 N
- Mechanical lifetime:
  up to 2 million cycles of operation
- Impact resistance:
  IK07 according to IEC 62262

**Electrical characteristics**
- Operating voltage range: 8 – 32 VDC

**Illumination**
- Halo ring and symbol illumination can be configured independently
- LED symbol illumination
  – Colour: white
  – Luminance:
    approx. 20 cd/m², dimmable
- LED halo ring illumination
  with four freely configurable segments
  – Multi-colour: RGB
  – Luminance: approx. 1 500 cd/m²
    dimmable
- Illumination functions: steady
  lighting, flashing, pulses, rotations, colour changes
  – Halo and symbol illumination can be configured individually

**Symbols**
- Symbols in accordance with ISO 7000
- Customer-specific symbols on request

**Interfaces**
- CAN interface (ISO 11898)
- CAN protocols: CANopen (CiA 401), CAN J1939
- Baud rate 125, 250, 500, 1000 kBit/s (software configurable) *1
- Connector Deutsch DT04-6P

**Ambient conditions**
- Operating temperature:
  –40 °C … +85 °C
- Storage temperature:
  –40 °C … +85 °C

**Protection degree**
- IP6K7 according to ISO 20653
- Up to IP6K7 (panel/screw-in version)
- Up to IP5K4 (panel/clip-in version)

**Dimensions**
(All dimensions in mm)

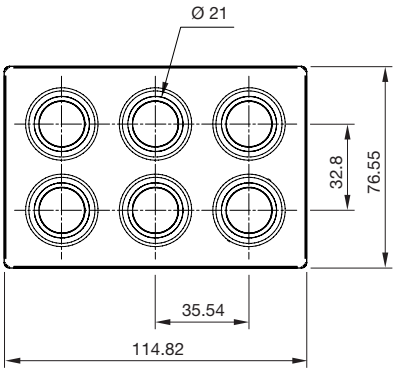


**Mounting cut-out**
(Front plate thickness
1.0 mm … 4.0 mm) *2

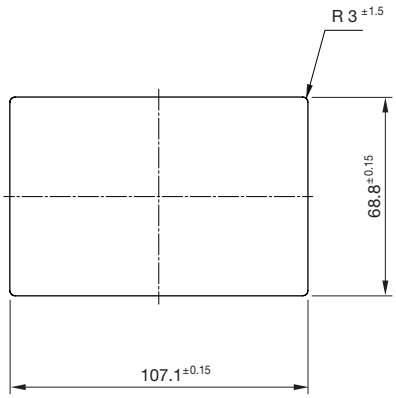


**Mounting**
Clip-in mounting

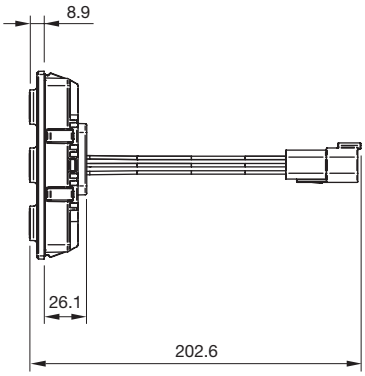


Screw-in mounting

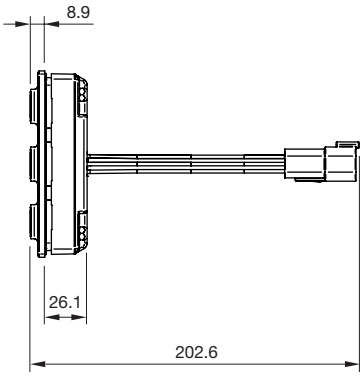


*1 In development
*2 For vibration-proof mounting, a front plate of at least 2 mm thickness is recommended.

# *Keypad PLUS.*

**Mechanical characteristics**
- Actuation force: approx. 6.5 N
- Overload: 250 N
- Mechanical lifetime:
  up to 2 million cycles of operation
- Impact resistance:
  IK07 according to IEC 62262

**Electrical characteristics**
- Operating voltage range: 8 – 32 VDC

**Illumination**
- Halo ring and symbol illumination can be configured independently
- LED symbol illumination
  – Colour: white
  – Luminance: approx. 20 cd/m², (dimmable)
- LED halo ring illumination
  – Colour: red (other colours on request)
  – Luminance: approx. 750 cd/m² (dimmable)
- Illumination functions: lighting, flashing, pulses
  – Halo and symbol illumination can be configured individually

**Symbols**
- Symbols in accordance with ISO 7000
- Customer-specific symbols on request

**Interfaces**
- CAN interface (ISO 11898)
- CAN protocols: CANopen (CiA 401), CAN J1939
- Baud rate 125, 250, 500, 1000 kBit/s (software configurable) *1
- Connector Deutsch DT04-6P

**Ambient conditions**
- Operating temperature:
  –40 °C … +85 °C
- Storage temperature:
  –40 °C … +85 °C

**Protection degree**
- IP6K7 according to ISO 20653
- Up to IP6K7 (panel/screw-in version)
- Up to IP5K4 (panel/clip-in version)

**Dimensions**
(All dimensions in mm)

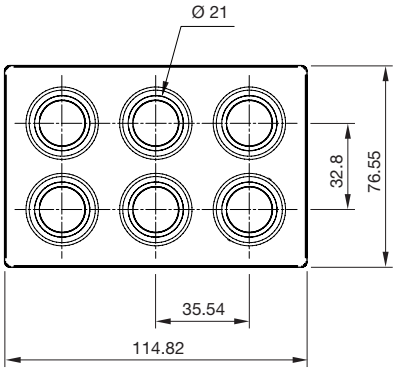


**Mounting cut-out**
(Front plate thickness 1.0 mm … 4.0 mm) *2

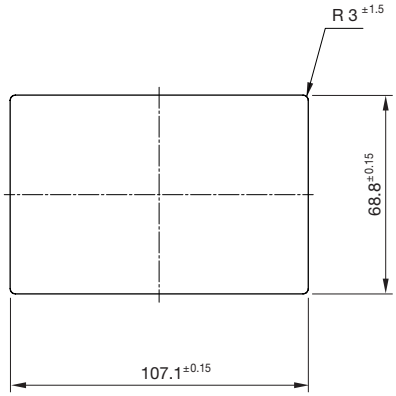


**Mounting**
Clip-in mounting

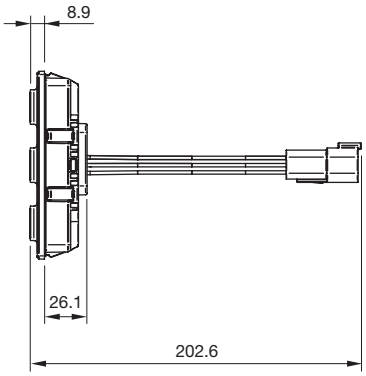


Screw-in mounting

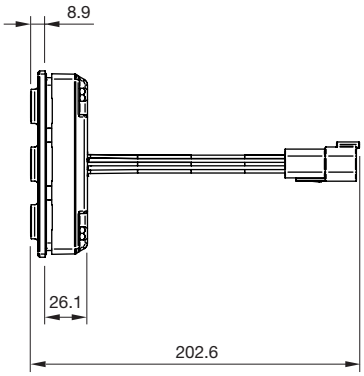


*1 In development
*2 For vibration-proof mounting, a front plate of at least 2 mm thickness is recommended.

# *Keypad BASIC.*

**Mechanical characteristics**
- Actuation force: approx. 6.5 N
- Overload: 250 N
- Mechanical lifetime:
  up to 2 million cycles of operation
- Impact resistance:
  IK07 according to IEC 62262

**Electrical characteristics**
- 8 – 18 VDC or 18 – 32 VDC for operating voltage of the illumination for use in 12 V or 24 V applications. Optionally available with switch contacts with diagnostic capability

**Illumination**
- Halo ring and symbol illumination can be configured independently
- LED symbol illumination
  – Colour: white
  – Luminance: approx. 20 cd/m², (dimmable)
- LED halo ring illumination
  – Colour: red
  (other colours on request)
  – Luminance: approx. 750 cd/m²
- Illumination functions
  – Halo and symbol illumination can be configured individually

**Symbols**
- Symbols in accordance with ISO 7000
- Customer-specific symbols on request

**Interfaces**
- Connector: Würth Elektronik WR-MPC3, 16 Pins

**Ambient conditions**
- Operating temperature:
  –40 °C … +85 °C
- Storage temperature:
  –40 °C … +85 °C

**Protection degree**
- IP6K7 (front side)
- IP20 (rear side) according to ISO 20653
- Up to IP6K7 (panel/screw-in version)
- Up to IP5K4 (panel/clip-in version)

**Dimensions**
(All dimensions in mm)

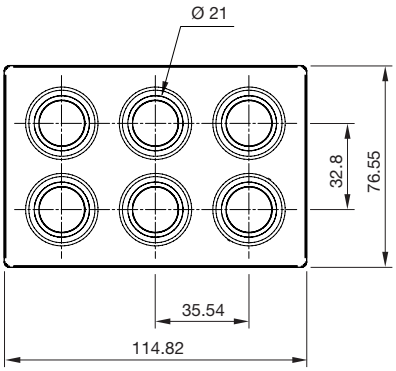


**Mounting cut-out**
(Front plate thickness 1.0 mm … 4.0 mm) *

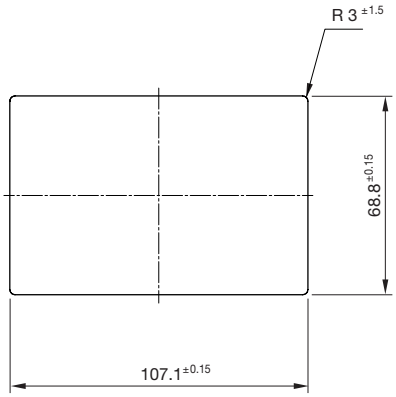


**Mounting**
Clip-in mounting

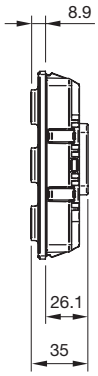


Screw-in mounting

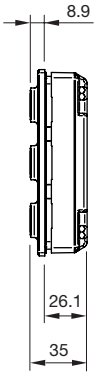


* For vibration-proof mounting, a front plate of at least 2 mm thickness is recommended.

# *Keypad SUPER.*

**Mechanical characteristics**
- Actuation force: approx. 11 N
- Overload: 250 N
- Mechanical lifetime:
  up to 2 million cycles of operation
- Impact resistance:
  IK07 according to IEC 62262

**Electrical characteristics**
- Operating voltage range: 8 – 32 VDC

**Illumination**
- Halo ring and symbol illumination can be configured independently
- LED symbol illumination
  – Colour: white
  – Luminance:
  approx. 20 cd/m² (dimmable)
- LED halo ring illumination with four freely configurable segments
  – Multi-colour: RGB
  – Luminance: approx. 1 500 cd/m² (dimmable)
- Illumination functions: steady lighting, flashing, pulses, rotations, colour changes
  – Halo and symbol illumination can be configured individually

**Symbols**
- Symbols in accordance with ISO 7000
- Customer-specific symbols on request

**Interfaces**
- CAN interface (ISO 11898)
- CAN protocols: CANopen (CiA 401), CAN J1939
- Baud rate 125, 250, 500, 1000 kBit/s (software configurable) *1
- Connector Deutsch DT04-6P

**Ambient conditions**
- Operating temperature:
  –40 °C … +85 °C
- Storage temperature:
  –40 °C … +85 °C

**Protection degree**
- IP6K9K according to ISO 20653 *2
- Up to IP6K9 (panel/screw-in version)
- Up to IP5K4 (panel/clip-in version)

**Dimensions**
(All dimensions in mm)

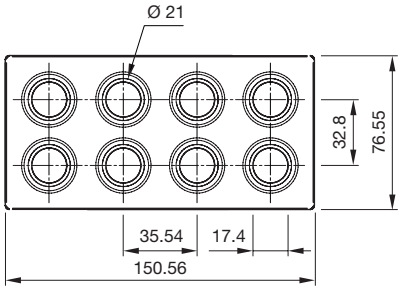


**Mounting cut-out**
(Front plate thickness
1.0 mm … 4.0 mm) *3

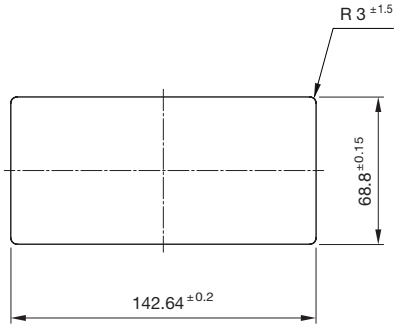


**Mounting**
Clip-in mounting

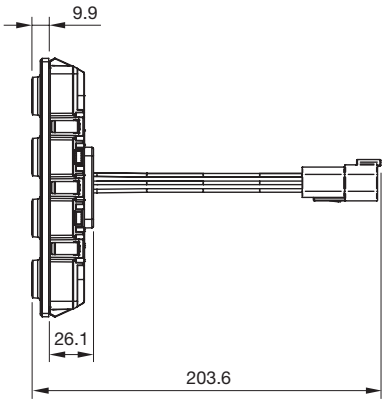


Screw-in mounting

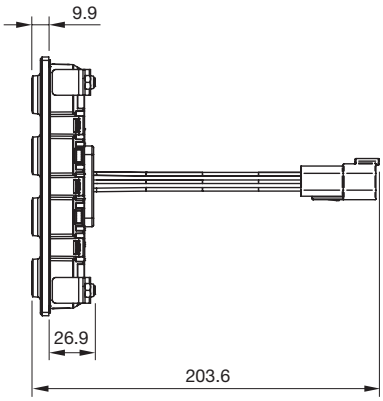


*1 in development

*1 Under extreme conditions, the symbol inserts may detach. These can be easily reinserted in the keypad. For further information, please refer to the operating instructions.

*2 For vibration-proof mounting, a front plate of at least 2 mm thickness is recommended.

# *Keypad PLUS.*

**Mechanical characteristics**
- Actuation force: approx. 11 N
- Overload: 250 N
- Mechanical lifetime:
  up to 2 million cycles of operation
- Impact resistance:
  IK07 according to IEC 62262

**Electrical characteristics**
- Operating voltage range: 8 – 32 VDC

**Illumination**
- Halo ring and symbol illumination can be configured independently
- LED symbol illumination
  – Colour: white
  – Luminance: approx. 20 cd/m², (dimmable)
- LED halo ring illumination
  – Colour: red
    (other colours on request)
  – Luminance: approx. 750 cd/m² (dimmable)
- Illumination functions: lighting, flashing, pulses
  – Halo and symbol illumination can be configured individually

**Symbols**
- Symbols in accordance with ISO 7000
- Customer-specific symbols on request

**Interfaces**
- CAN interface (ISO 11898)
- CAN protocols: CANopen (CiA 401), CAN J1939
- Baud rate 125, 250, 500, 1000 kBit/s (software configurable) *1
- Connector Deutsch DT04-6P

**Ambient conditions**
- Operating temperature:
  –40 °C … +85 °C
- Storage temperature:
  –40 °C … +85 °C

**Protection degree**
- IP6K9K according to ISO 20653 *2
- Up to IP6K7 (panel/screw-in version) *2
- Up to IP5K4 (panel/clip-in version)

**Dimensions**
(All dimensions in mm)

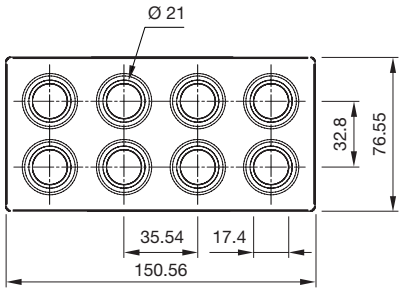


**Mounting cut-out**
(Front plate thickness
1.0 mm … 4.0 mm) *3

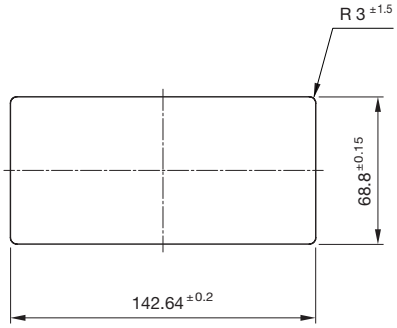


**Mounting**
Clip-in mounting

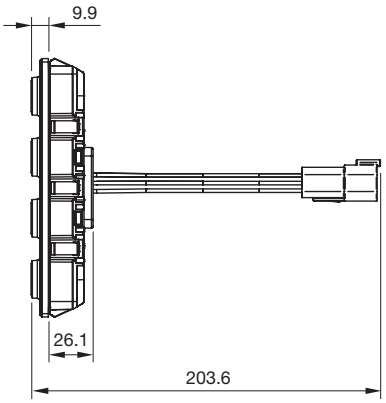


Screw-in mounting

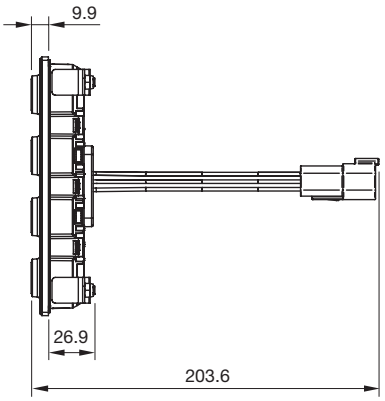


*1 In development

*2 Under extreme conditions, the symbol inserts may detach. These can be easily reinserted in the keypad. For further information, please refer to the operating instructions.

*3 For vibration-proof mounting, a front plate of at least 2 mm thickness is recommended.

# *Keypad BASIC.*

**Mechanical characteristics**
- Actuation force: approx. 11 N
- Overload: 250 N
- Mechanical lifetime:
  up to 2 million cycles of operation
- Impact resistance:
  IK07 according to IEC 62262

**Electrical characteristics**
- 8 – 18 VDC or 18 – 32 VDC for operating voltage of the illumination for use in 12 V or 24 V applications. Optionally available with switch contacts with diagnostic capability

**Illumination**
- Halo ring and symbol illumination can be configured independently
- LED symbol illumination
  – Colour: white
  – Luminance: approx. 20 cd/m², (dimmable)
- LED halo ring illumination
  – Colour: red
  (other colours on request)
  – Luminance: approx. 750 cd/m²
- Illumination functions
  – Halo and symbol illumination can be configured individually

**Symbols**
- Symbols in accordance with ISO 7000
- Customer-specific symbols on request

**Interfaces**
- Connector: Würth Elektronik WR-MPC3, 20 Pins

**Ambient conditions**
- Operating temperature:
  –40 °C … +85 °C
- Storage temperature:
  –40 °C … +85 °C

**Protection degree**
- IP6K9K (front side)
- IP20 (rear side) according to ISO 20653 *1
- Up to IP6K9K (panel/screw-in version)
- Up to IP5K4 (panel/clip-in version)

**Dimensions**
(All dimensions in mm)

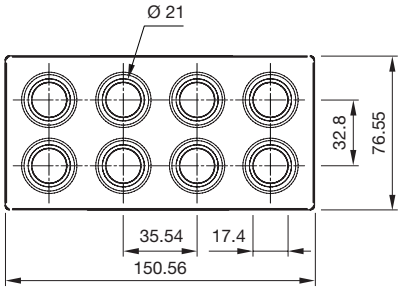


**Mounting cut-out**
(Front plate thickness 1.0 mm … 4.0 mm) *2

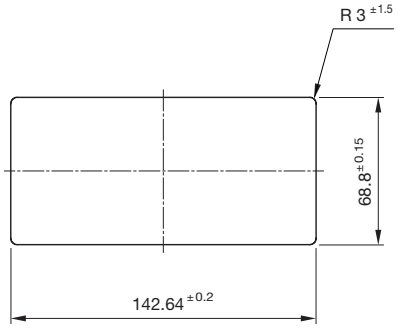


**Mounting**
Clip-in mounting

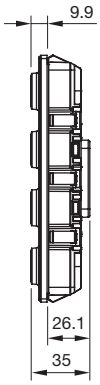


Screw-in mounting

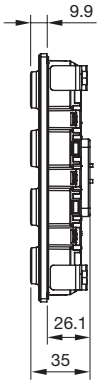


*1 Under extreme conditions, the symbol inserts may detach. These can be easily reinserted in the keypad. For further information, please refer to the operating instructions.

*2 For vibration-proof mounting, a front plate of at least 2 mm thickness is recommended.

# *Rotary Cursor Controller SUPER.*

**Mechanical characteristics**
- Actuation force: approx. 11 N
- Overload: 250 N
- Mechanical lifetime:
  Pushbuttons: up to 2 million cycles of operation
  Rotary Switch: up to 500 000 cycles
- Impact resistance:
  IK07 according to IEC 62262

**Rotary pushbutton**
- Rotation function: 360°, 20 detents, incremental
- Tilt angle: X/Y, digital with micro-switch

**Electrical characteristics**
- Operating voltage range: 8–32 VDC
- LoadDump A or B

**Illumination**
- Halo ring and symbol illumination can be configured independently
- LED symbol illumination
  – Colour: white
  – Luminance:
  approx. 20 cd/m² (dimmable)
- LED halo ring illumination with four freely configurable segments
  – Multi-colour: RGB
  – Luminance: approx. 1 500 cd/m² (dimmable, depending on colour)
- Illumination functions: steady lighting, flashing, pulses, rotations, colour changes

**Symbols**
- Symbols in accordance with ISO 7000
- Customer-specific symbols on request

**Interfaces**
- CAN interface (ISO 11898)
- CAN protocols: CANopen (CiA 401), CAN J1939
- Baud rate 125, 250, 500, 1000 kBit/s (software configurable) *1
- Connector Deutsch DT04-6P

**Ambient conditions**
- Operating temperature:
  –40 °C … +85 °C
- Storage temperature:
  –40 °C … +85 °C

**Protection degree**
- IP6K7 according to ISO 20653
- Up to IP6K7 (panel/screw-in version)
- Up to IP5K4 (panel/clip-in version)

**Dimensions**
(All dimensions in mm)

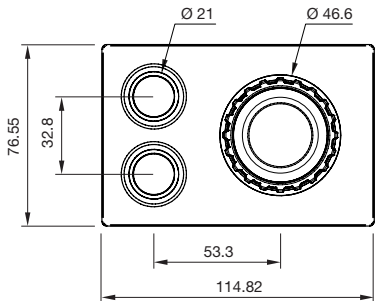


**Mounting cut-out**
(Front plate thickness 1.0 mm … 4.0 mm) *2

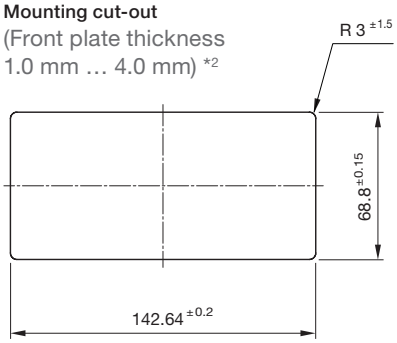


**Mounting**
Clip-in mounting

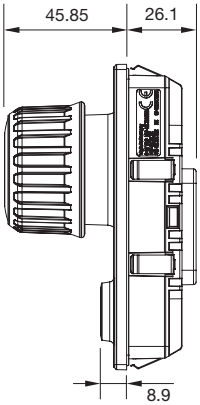


Screw-in mounting

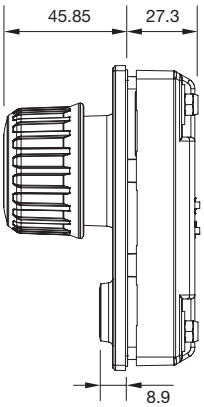


*1 in development

*2 For vibration-proof mounting, a front plate of at least 2 mm material thickness and the use of the screw mounting variant is recommended.

# *Rotary Cursor Controller PLUS.*

**Mechanical characteristics**
- Actuation force: approx. 11 N
- Overload: 250 N
- Mechanical lifetime:
  Pushbuttons: up to 2 million cycles of operation
  Rotary Switch: up to 500 000 cycles
- Impact resistance:
  IK07 according to IEC 62262

**Rotary pushbutton**
- Rotation function: 360°, 20 detents, incremental
- Tilt angle: X/Y, digital with micro-switch

**Electrical characteristics**
- Operating voltage range: 8–32 VDC
- LoadDump A or B

**Illumination**
- Halo ring and symbol illumination can be configured independently
- LED symbol illumination
  – Colour: white
  – Luminance: approx. 20 cd/m², (dimmable)
- LED halo ring illumination
  – Colour: red (other colours on request)
  – Luminance: approx. 1 500 cd/m² (dimmable, depending on colour)
- Illumination functions steady lighting, flashing, pulses, rotations, colour changes

**Symbols**
- Symbols in accordance with ISO 7000
- Customer-specific symbols on request

**Interfaces**
- CAN interface (ISO 11898)
- CAN protocols: CANopen (CiA 401), CAN J1939
- Baud rate 125, 250, 500, 1000 kBit/s (software configurable) *1
- Connector Deutsch DT04-6P

**Ambient conditions**
- Operating temperature:
  –40 °C … +85 °C
- Storage temperature:
  –40 °C … +85 °C

**Protection degree**
- IP6K7 according to ISO 20653
- Up to IP6K7 (panel/screw-in version)
- Up to IP5K4 (panel/clip-in version)

**Dimensions**
(All dimensions in mm)

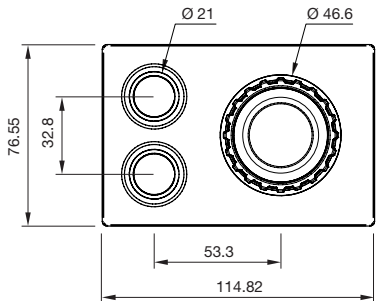


**Mounting cut-out**
(Front plate thickness 1.0 mm … 4.0 mm) *2

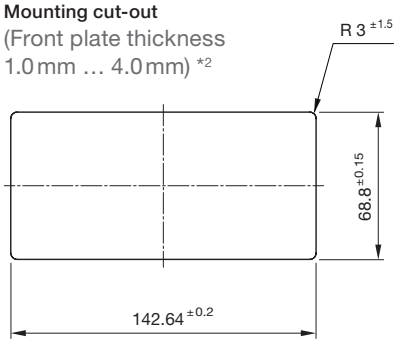


**Mounting**
Clip-in mounting

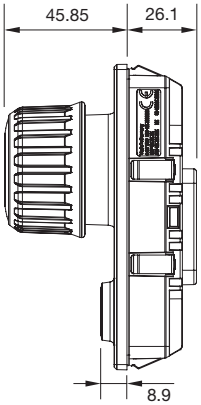


Screw-in mounting

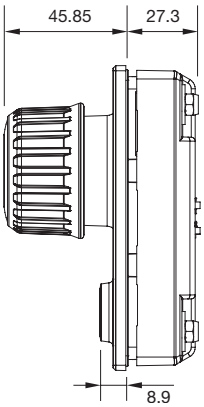


*1 in development

*2 For vibration-proof mounting, a front plate of at least 2 mm material thickness and the use of the screw mounting variant is recommended.

# *Rotary Pushbutton SUPER.*

**Mechanical characteristics**
- Actuation force: approx. 11 N
- Overload: 250 N
- Mechanical lifetime:
  Pushbuttons: up to 2 million cycles of operation
  Rotary Switch: up to 500 000 cycles
- Impact resistance:
  IK07 according to IEC 62262

**Rotary pushbutton**
- Rotation function: 360°, 20 detents, incremental

**Electrical characteristics**
- Operating voltage range: 8 – 32 VDC
- LoadDump A or B

**Illumination**
- Halo ring and symbol illumination can be configured independently
- LED symbol illumination
  – Colour: white
  – Luminance:
    approx. 20 cd/m² (dimmable)
- LED halo ring illumination
  with four freely configurable segments
  – Multi-colour: RGB
  – Luminance: approx. 1 500 cd/m²
    (dimmable, depending on colour)
- Illumination functions: steady lighting, flashing, pulses, rotations, colour changes

**Symbols**
- Symbols in accordance with ISO 7000
- Customer-specific symbols on request

**Interfaces**
- CAN interface (ISO 11898)
- CAN protocols: CANopen (CiA 401), CAN J1939
- Baud rate 125, 250, 500, 1000 kBit/s (software configurable) *1
- Connector Deutsch DT04-6P

**Ambient conditions**
- Operating temperature:
  –40 °C … +85 °C
- Storage temperature:
  –40 °C … +85 °C

**Protection degree**
- IP6K7 according to ISO 20653
- Up to IP6K9 (panel/screw-in version)
- Up to IP5K4 (panel/clip-in version)

**Dimensions**
(All dimensions in mm)

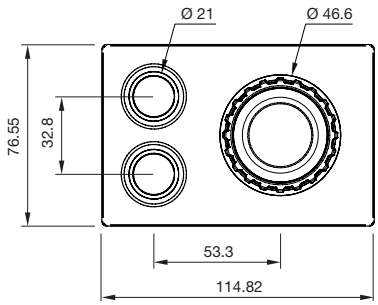


**Mounting cut-out**
(Front plate thickness 1.0 mm … 4.0 mm) *2

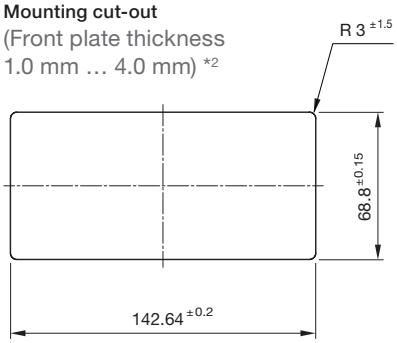


**Mounting**
Clip-in mounting

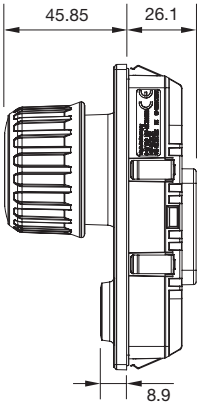


Screw-in mounting

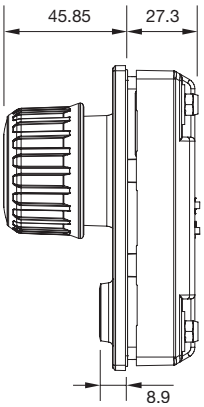


*1 in development

*2 For vibration-proof mounting, a front plate of at least 2 mm material thickness and the use of the screw mounting variant is recommended.

# *Rotary Pushbutton PLUS.*

**Mechanical characteristics**
- Actuation force: approx. 11 N
- Overload: 250 N
- Mechanical lifetime:
  Pushbuttons: up to 2 million cycles of operation
  Rotary Switch: up to 500 000 cycles
- Impact resistance:
  IK07 according to IEC 62262

**Rotary pushbutton**
- Rotation function: 360°, 20 detents, incremental

**Electrical characteristics**
- Operating voltage range: 8 – 32 VDC
- LoadDump A or B

**Illumination**
- Halo ring and symbol illumination can be configured independently
- LED symbol illumination
  – Colour: white
  – Luminance: approx. 20 cd/m², (dimmable)
- LED halo ring illumination
  – Colour: red (other colours on request)
  – Luminance: approx. 1 500 cd/m² (dimmable, depending on colour)
- Illumination functions steady lighting, flashing, pulses, rotations, colour changes

**Symbols**
- Symbols in accordance with ISO 7000
- Customer-specific symbols on request

**Interfaces**
- CAN interface (ISO 11898)
- CAN protocols: CANopen (CiA 401), CAN J1939
- Baud rate 125, 250, 500, 1000 kBit/s (software configurable) *1
- Connector Deutsch DT04-6P

**Ambient conditions**
- Operating temperature:
  –40 °C … +85 °C
- Storage temperature:
  –40 °C … +85 °C

**Protection degree**
- IP6K7 according to ISO 20653
- Up to IP6K7 (panel/screw-in version)
- Up to IP5K4 (panel/clip-in version)

**Dimensions**
(All dimensions in mm)

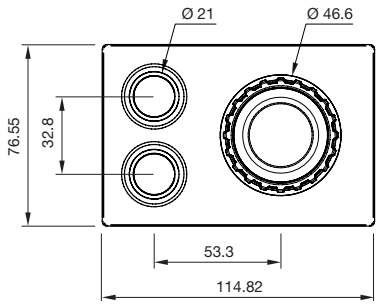


**Mounting cut-out**
(Front plate thickness 1.0 mm … 4.0 mm) *2

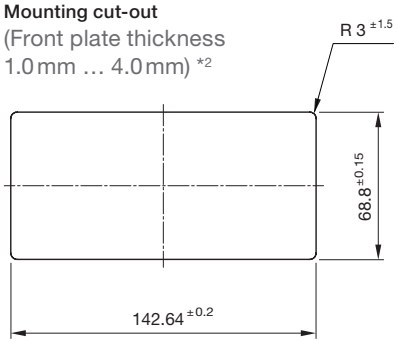


**Mounting**
Clip-in mounting

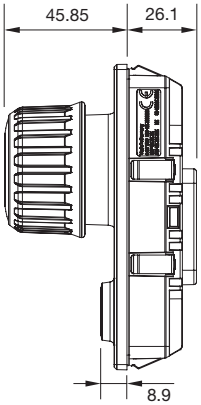


Screw-in mounting

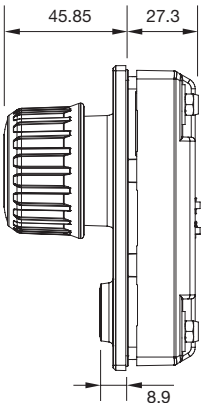


*1 In development

*2 For vibration-proof mounting, a front plate of at least 2 mm material thickness and the use of the screw mounting variant is recommended.

# *Rotary Cursor Controller and Rotary Pushbutton.*

The Series 09 Rotary Cursor Controller and Rotary Pushbutton Modules are designed for use in special vehicles, trucks and buses. They cover the functions of a rotary control, a pushbutton and, in the case of the Rotary Cursor Controller, also a digital joystick. The modules are ideal for control and selection within a vehicle display or navigation in a user menu.

The two additional pushbuttons supplement the functionalities of the RCC and RPB and can be configured with individual HALO ring and symbol illumination and symbols depending on the product variant.

The joystick function of the Rotary Cursor Controller is implemented with a three-dimensional tilt function. The tilt function in the X/Y direction has been designed with integrated protection against unintentional contact and actuation, so that safe operation is possible even under difficult conditions, for example under strong movement.

With this high level of safety, our Series 09 rugged modules stand not only for intuitive, but also for reliable operation in the vehicle interior.

**Functions**

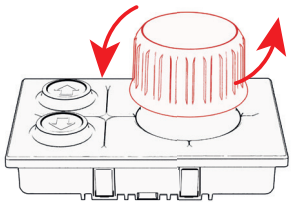

*"Rotate" function.*

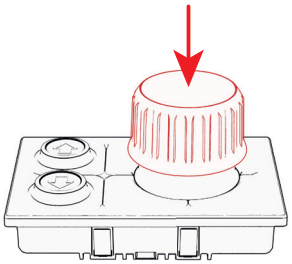

*"Push" function.*

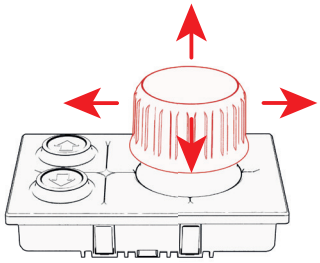

*"Joystick" function.*

**Operation**

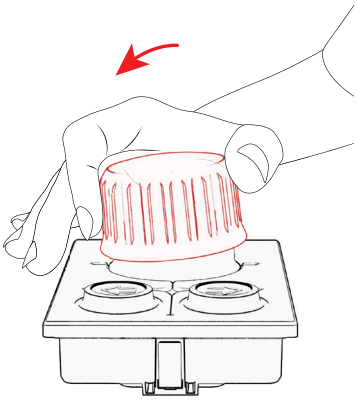

*Intuitive operation with two or three fingers.*

*Protection against unintentional actuation through lateral contact.*

# *Accessories.*

## Protective shroud

*Series 09*

**For protection against unintentional actuation and operating errors.**
In some applications, users face additional challenges when operating HMIs. For example, in vehicles that are continuously in motion on uneven terrain or when using work equipment such as work gloves – which can cause additional difficulties in the operation of HMIs.

To prevent unintentional actuation or operating errors, EAO offers a protective shroud for its robust Rugged Keypads with 6 or 8 pushbuttons.

The robust and shock-resistant protective frame also serves to comply with specific standards in various areas of application. For example, the EN1501-1:2021 standard requires all control and monitoring units on the outside of garbage trucks to be secured against accidental actuation or contact. In this way, erroneous operation and uncontrolled movement of equipment parts such as the lifting devices can be avoided. Likewise, HMIs on garbage trucks must also be able to be operated with work gloves.

The new Protective Shroud of Series 09 can simply be screwed onto the Rugged Keypad with 6 or 8 pushbuttons, thus separating the individual pushbuttons. The additional guidance of the fingers makes it easy to operate the desired function even when wearing work gloves.

**Advantages**
- Prevention of unintentional actuation
- Finger guidance and separation of the individual pushbuttons
- Reduced risk of operating errors

**Material**
- PBT GF30 with fibreglas

**Impact resistance**
- IK07

**Resistance**
- Highest resistance against UV-light and chemicals (ISO16750-4/5)

## Interchangeable symbol inserts

*Series 09*

The interchangeable symbol inserts are available with ISO 7000 or customer-specific symbols. This enables the Series 09 products to be perfectly adapted to your application.

n addition to the standard colour black, symbol inserts are also available in a variety of other colours.

## Tool for symbol inserts

*Series 09*

The symbol insert tool with trendy design enables userfriendly fitting and removal of symbol inserts of the pushbuttons.

# EAO Contact.
*Your centre of excellence.*

## Headquarters

EAO Holding AG
Tannwaldstrasse 88
CH-4600 Olten
Telephone +41 62 286 92 00
info@eao.com

## Manufacturing Companies

Switzerland
EAO AG
Tannwaldstrasse 88
CH-4600 Olten
Telephone +41 62 286 91 11
info@eao.com

Business Unit Systems
Tannwaldstrasse 88
CH-4600 Olten
Telephone +41 62 286 91 11
logistics.esy@eao.com

China
EAO (Guangzhou) Ltd.
3/F, Block G4, South China
New Materials Innovation Park
31 Kefeng Road
Guangzhou Science City
CN-Guangzhou, PRC
Telephone +86 20 3229 0390
sales.ecn@eao.com

Germany
EAO Automotive GmbH & Co. KG
Richard-Wagner-Straße 3
DE-08209 Auerbach/Vogtland
Telephone +49 3744 8264 0
sales.esa@eao.com

North America
EAO Corporation
One Parrott Drive
Shelton
US-CT 06484
Telephone +1 203 951 4600
sales.eus@eao.com

## Sales Companies

China
EAO (Guangzhou) Ltd.
3/F, Block G4, South China
New Materials Innovation Park
31 Kefeng Road
Guangzhou Science City
CN-Guangzhou, PRC
Telephone +86 20 3229 0390
sales.ecn@eao.com

EAO (Shanghai) Office
Rm.401, Lihpao Plaze,
NO.159 Shenwu Road,
Minhang District,
CN-Shanghai, 201106.
PRC
Telephone +86 21 6095 0717
sales.ecn@eao.com

France
EAO France SAS
27 rue Maurice Flandin
FR-69003 Lyon
Telephone +33 426 298 588
sales.efr@eao.com

Germany, Austria, Czech Republic, Poland, Slovakia
EAO GmbH
Langenberger Straße 570
DE-45277 Essen
Telephone +49 201 8587 0
sales.ede@eao.com

Hong Kong (Asia Pacific)
EAO (Far East) Ltd.
Unit A1, 1/F, Block A
Tin On Industrial Building
777 Cheung Sha Wan Road
Lai Chi Kok, Kln
HK-Hong Kong
Telephone +852 27 86 91 41
sales.ehk@eao.com

India
EAO India Pvt Ltd.
B159, Sector 63
IN-Noida U.P. 201037
Telephone +91 98110 48316
sales.ein@eao.com

Italy
EAO Italia S.r.l.
Centro Direzionale Summit –
Palazzo C1
Via Brescia 26
IT-20063 Cernusco sul Naviglio (MI)
Telephone +39 029 247 0722
sales.eit@eao.com

Japan
EAO Japan Co. Ltd.
Net 1 Mita Bldg. 3F
3-1-4 Mita Minato-ku
JP-Tokyo 108-0073
Telephone +81 3 5444 5411
sales.ejp@eao.com

Netherlands, Belgium
EAO Benelux B.V.
Kamerlingh Onnesweg 46
NL-3316 GL Dordrecht
Telephone +31 78 653 17 00
sales.enl@eao.com

North America
EAO Corporation
One Parrott Drive
Shelton
US-CT 06484
Telephone +1 203 951 4600
sales.eus@eao.com

Switzerland
EAO AG
Tannwaldstrasse 88
CH-4600 Olten
Telephone +41 62 286 95 00
sales.ech@eao.com

United Kingdom, Denmark, Finland, Ireland, Norway, Sweden
EAO Ltd.
Highland House
Albert Drive
Burgess Hill
GB-West Sussex RH15 9TN
Telephone +44 1444 236 000
sales.euk@eao.com



EAO reserves the right to change specifications without further notice.

700.067.BR09-Keypads.03/05.2025