SICK.COM

DATA SHEET

# PC4-C186100000000

Device columns
Mounting systems

Sensor Intelligence

## MOUNTING SYSTEMS

# PC4-C186100000000

### ORDERING INFORMATION

| Type | part no. |
|---|---|
| PC4-C186100000000 | 2139641 |

Further device versions and accessories at www.sick.com/Device_columns

## DETAILED TECHNICAL DATA

### FEATURES

| | |
|---|---|
| Description | PC4 compact column for mounting suitable variants of the deTec and deTem product families.<br>Enables devices to be mounted on all four sides of the device column. |
| Mounting system type | Mechanical anchoring to the floor |
| Items supplied | PC4 device column with pre-assembled alignment plate and removable end cap<br>Base plate with spirit level, fine alignment wheel and setscrews<br>M8 screws and washers for mounting the alignment plate on the base plate<br>Operating instructions for download |
| Column height | 1,860.5 mm |
| Suitable for device variants | |
| deTec safety light curtain | Protective field height ≤ 1,650 mm |
| deTem safety light-beam sensor | Any |
| Compatible brackets | |
| FlexFix | ✓ |
| QuickFix | ✓ |
| Flat-Mount | ✓ [1] |
| Swivel-Mount | ✓ [1] |
| Additional options | Enables additional accessories, such as muting arms, to be installed. |
| Muting sensor protection left (2140187) | ✓ |
| Muting sensor protection right (2140186) | ✓ |
| Muting arm adapter (2140086) | ✓ |
| Height of first beam above ground | 200 mm |

[1] The flat mount and swivel mount brackets are attached at the top and bottom of the device. A correspondingly higher column must therefore be selected for installation.

### FUNCTIONS

| | |
|---|---|
| Alignment | The complete alignment process involves leveling the base plate and rotating the alignment plate at the foot of the column. |
| Alignment aid mark (–45°, 0°, 45°) | ✓ |
| Fine alignment wheel | ✓ |

| | |
|---|---|
| Setscrews for leveling | ✓ |
| Spirit level | ✓ |

## MECHANICS

| | |
|---|---|
| Material | |
| Column profile | Aluminum (anodised) |
| Alignment plate | Aluminum (powder-coating) |
| Base plate | Aluminum (powder-coating) |
| Fine alignment wheel | PA6 |
| End cap | ABS |
| Dimensions | See dimensional drawing |
| L1 | 1,800 mm [1] |
| L2 | 1,860.5 mm [2] |
| Cross-section of column profile | 68 mm x 68 mm |
| Diameter of base plate | 195 mm |
| Weight | 5.99 kg |

[1] L1 = Column profile height.

[2] L2 = Column height (incl. base plate, alignment plate and end cap).

## AMBIENT DATA

| | |
|---|---|
| Storage temperature | –30 °C ... +70 °C |

## DIMENSIONAL DRAWING PC4 COMPACT COLUMN

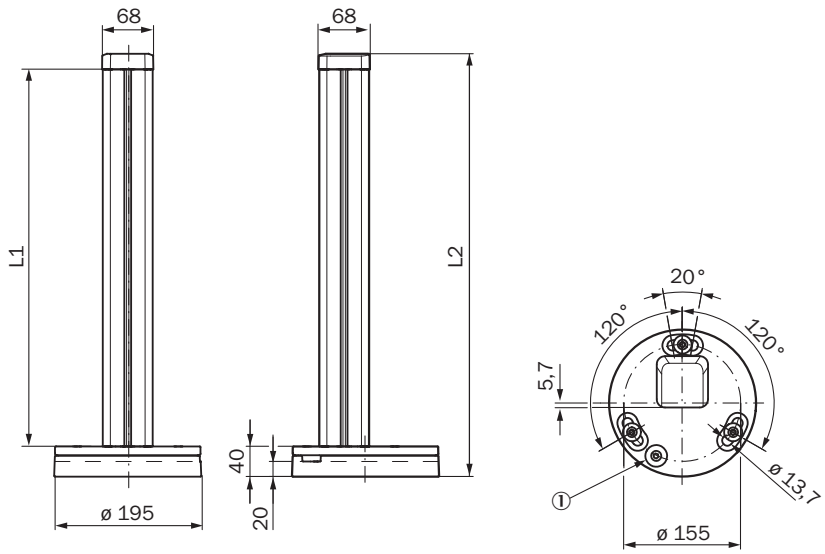


Dimensions in mm (inch)
① Fine alignment wheel

| Type | Part no. | L1 = Column profile height | L2 = Column height (incl. base plate, alignment plate and end cap) |
|---|---|---|---|
| PC4-C098110000000 | 2139633 | 924 | 984,5 |
| PC4-C108110000000 | 2139635 | 1024 | 1084,5 |
| PC4-C118110000000 | 2139636 | 1124 | 1184,5 |
| PC4-C128110000000 | 2139637 | 1224 | 1284,5 |
| PC4-C141110000000 | 2139638 | 1350 | 1410,5 |
| PC4-C156110000000 | 2139639 | 1500 | 1560,5 |
| PC4-C171110000000 | 2139640 | 1650 | 1710,5 |

| Type | Part no. | L1 = Column profile height | L2 = Column height (incl. base plate, alignment plate and end cap) |
|---|---|---|---|
| PC4-C186110000000 | 2139641 | 1800 | 1860,5 |
| PC4-C201110000000 | 2139642 | 1950 | 2010,5 |
| PC4-C216110000000 | 2139643 | 2100 | 2160,5 |
| PC4-C231110000000 | 2139644 | 2250 | 2310,5 |

Further information as well as suitable accessories, example applications and downloads such as CAD dimensional models, operating instructions and software can be found at www.sick.com/2139641

SICK AG
WALDKIRCH
GERMANY
SICK.COM

# SICK AT A GLANCE

SICK is a leading global technology company for intelligent sensors and integrated solutions in industrial automation. Our technologies set benchmarks, making your industrial processes more efficient, safer and more sustainable – both in logistics and manufacturing operations.

SICK combines sensor intelligence with industry expertise and certified consulting services. We provide the ideal foundation for scalable as well as tailor-made automation solutions and create added value along the entire value chain. Our close partnerships with our customers are more than just a promise: Together, we optimize productivity, improve quality, protect health and safety, and help build a sustainable future. All with empathy and trust.

Since 1946, we have been developing innovative technologies with passion and a pioneering spirit. With a global network in around 40 countries, SICK has a global presence and is always close by. The company's headquarters are located in Waldkirch near Freiburg, Germany. Our customers benefit from our understanding of both local and global requirements, which enables us to deliver tailor-made solutions

SICK
Sensor Intelligence