Edition 09/2025

RECYCLER GUIDE

SITOP

LOGO!Power

Reference product: 6EP3333-6SB00-0AY0

This document covers all variants in the range
6EP3310-6SB00-0AY0, 6EP3311-6SB00-0AY0, 6EP3320-6SB00-0AY0, 6EP3321-6SB00-0AY0, 6EP3322-6SB00-0AY0, 6EP3321-6SB10-0AY0, 6EP3322-6SB10-0AY0,6EP3330-6SB00-0AY0, 6EP3331-6SB00-0AY0, 6EP3332-6SB00-0AY0, 6EP3333-6SB00-0AY0, 6EP3333-6SC00-0AY0.

support.industry.siemens.com

SIEMENS

SIEMENS

SITOP power supply

Recycler Guide for LOGO!Power

Product Information

About this guide 1

Safety instructions 2

Recommended tool 3

Disassembly instructions 4

Explanation of substances and components 5

Received material fractions 6

Disclaimer of liability 7

09.2025

A5E54951492-01-76

Legal information

Warning notice system

This manual contains notices you have to observe in order to ensure your personal safety, as well as to prevent damage to property. The notices referring to your personal safety are highlighted in the manual by a safety alert symbol, notices referring only to property damage have no safety alert symbol. These notices shown below are graded according to the degree of danger.

⚠ DANGER
indicates that death or severe personal injury **will** result if proper precautions are not taken.

⚠ WARNING
indicates that death or severe personal injury **may** result if proper precautions are not taken.

⚠ CAUTION
indicates that minor personal injury can result if proper precautions are not taken.

NOTICE
indicates that property damage can result if proper precautions are not taken.

If more than one degree of danger is present, the warning notice representing the highest degree of danger will be used. A notice warning of injury to persons with a safety alert symbol may also include a warning relating to property damage.

Qualified Personnel

The product/system described in this documentation may be operated only by **personnel qualified** for the specific task in accordance with the relevant documentation, in particular its warning notices and safety instructions. Qualified persons are those who, because of their training and experience, are familiar with the installation, assembly, commissioning, operation, decommissioning and disassembly of the product and can recognize risks and avoid possible hazards.

Proper use of Siemens products

Note the following:

⚠ WARNING
Siemens products may only be used for the application described in the catalog and the associated usage information. If products and components from other manufacturers are used, these must be recommended or approved by Siemens. Proper transport, storage, installation, assembly, commissioning, operation and maintenance are required to ensure that the products operate safely and without any problems. The permissible ambient conditions must be complied with. The information in the relevant documentation must be observed.

Trademarks

All names identified by ® are registered trademarks of Siemens Aktiengesellschaft. The remaining trademarks in this publication may be trademarks whose use by third parties for their own purposes could violate the rights of the owner.

Disclaimer of Liability

We have reviewed the contents of this publication to ensure consistency with the hardware and software described. Since variance cannot be precluded entirely, we cannot guarantee full consistency. However, the information in this publication is reviewed regularly and any necessary corrections are included in subsequent editions.

Siemens Aktiengesellschaft
Digital Industries
Postfach 48 48
90026 NÜRNBERG
GERMANY

A5E54951492-01-76
Ⓟ 09/2025 Subject to change

Copyright © Siemens 2025.
All rights reserved

Table of contents

1 About this guide 5
2 Safety instructions 7
3 Recommended tool 9
4 Disassembly instructions 11
5 Explanation of substances and components 15
6 Received material fractions 17
7 Disclaimer of liability 19

About this guide

1

In order to conserve important resources, we work on reducing the materials we use and supporting the recycling economy right from the product design stage. An important way to achieve this goal is the resource recovery of electronic products at the end of their service life.

The Siemens Recycler Guides provide recyclers of electronic products with instructions on how to disassemble products safely in order to maximize resource recycling. The Recycler Guides provide step-by-step disassembly instructions and material composition information to help recyclers direct specific materials to specialized recyclers.

Disassembly may only be carried out by specialists trained in the recycling of electronic devices. The recycler is responsible for independently evaluating and ensuring compliance with all applicable environmental, health and safety regulations. This includes, among other things, the legal requirements in the area of management, handling, shipping and disposal as well as applicable laws to ensure the health and safety of all employees involved.

Contact us by email (recycling@siemens.com) for any questions or feedback relating to these guidelines.

Safety instructions

2

The recycler is responsible for independently evaluating all activities of its employees in performing or supporting the work and ensuring compliance with all applicable legal requirements. This includes, but is not limited to, laws regarding the health and safety of all employees performing or assisting in that work. The recycler is also responsible for assessing the workplace and ensuring that the area in which the work is carried out meets all ergonomic requirements to ensure the protection of its employees.

Danger notice (DIN EN ISO 7010)

Warning against hand injuries

Warning against pointed/sharp objects

Wear personal protective equipment throughout the recycling process.

Wear hand protection

Wear a mask

Wear eye protection

Wear foot protection

Wear protective clothing

Follow the instructions

WARNING

Electric shock due to residual charges in power components

Due to the capacitors, dangerous voltage is still present for up to 15 minutes after the power supply has been switched off. Touching live parts can lead to death or serious injury.

Wait 15 minutes before checking that there is no voltage and starting work.

Recommended tool

3

For the disassembly of the product, we recommend using the following tool:

Slotted screwdriver

Disassembly instructions

4

The following guide provides detailed information on how to disassemble the product at the end of its service life and on what materials you can collect and recycle.
In doing so, you support the recycling economy.

Components of the product

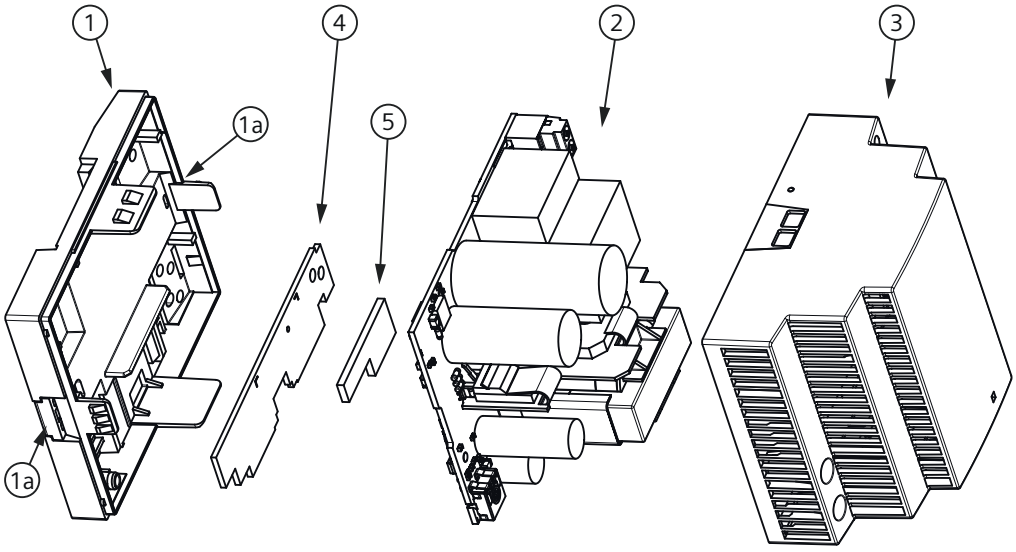

Position	Part	Material	Disassembly step
1	Rear housing	Polycarbonate	
1a	Mounting slide	POM	Step 5
2	Assembled PCB	Electronics	Step 2
3	Front housing	Polycarbonate	Step 1
4	Metal plate (only in 6EP3333-6SB00-0AY0, 6EP3333-6SC00-0AY0)	Aluminum	Step 4
5	Gap pad (only in 6EP3333-6SB00-0AY0, 6EP3333-6SC00-0AY0)	Elastomer (plastic)	Step 3

Products

This Recycler Guide covers the subsequent devices of the LOGO! Product family. The devices differ in their size and the components installed in them; however, their design is similar. When disassembling, comply with steps 1 to 5 of this guideline. Deviations, which are specific to a particular device, are expressly mentioned in the text.

Designation	Article number
LOGO!Power 5 V/3 A	6EP3310-6SB00-0AY0
LOGO!Power 5 V/6.3 A	6EP3311-6SB00-0AY0
LOGO!Power 12 V/0.9 A	6EP3320-6SB00-0AY0
LOGO!Power 12 V/1.9 A	6EP3321-6SB00-0AY0
LOGO!Power 12 V/4.5 A	6EP3322-6SB00-0AY0
LOGO!Power 15 V/1.9 A	6EP3321-6SB10-0AY0
LOGO!Power 15 V/4 A	6EP3322-6SB10-0AY0
LOGO!Power 24 V/0.6 A	6EP3330-6SB00-0AY0
LOGO!Power 24 V/1.3 A	6EP3331-6SB00-0AY0
LOGO!Power 24 V/2.5 A	6EP3332-6SB00-0AY0
LOGO!Power 24 V/4 A	6EP3333-6SB00-0AY0
LOGO!Power Ex 24 V/4 A	6EP3333-6SC00-0AY0

Dismantling the product

Follow these steps for disassembly:

1. Open the housing (1, 3) using a **slotted screwdriver** by pressing on the quick release catches at the sides, and then pull off the front housing.

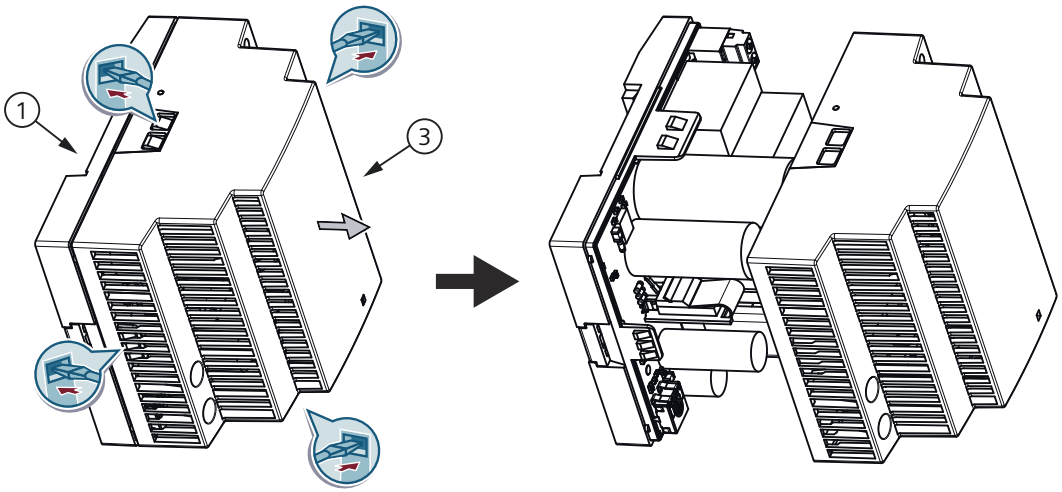

2. Remove the assembled PCB (2) by pulling on the rear housing (1).

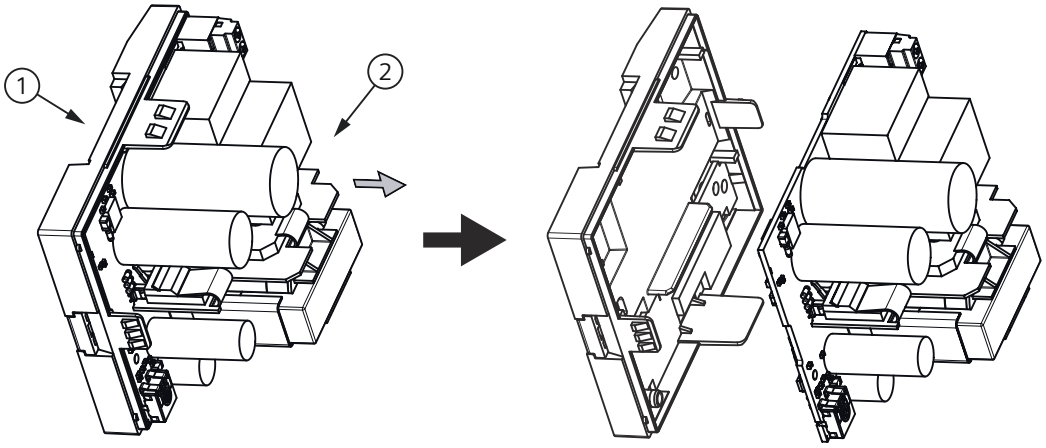

3. Remove the gap pad (5) (only in 6EP3333-6SB00-0AY0, 6EP3333-6SC00-0AY0)

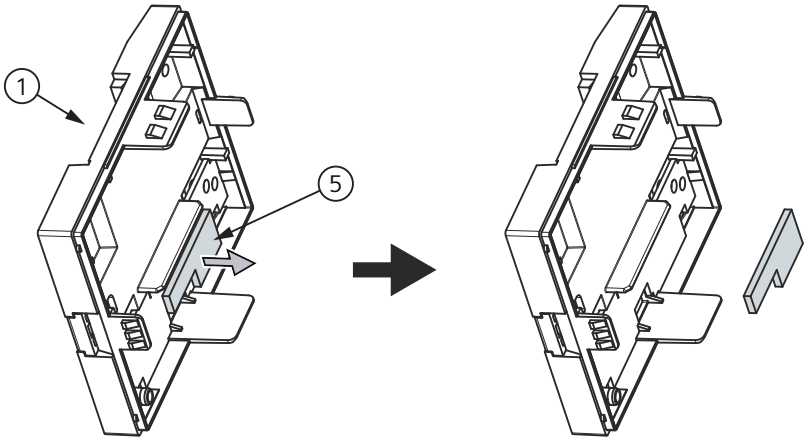

4. Remove the metal plate (4) (only in 6EP3333-6SB00-0AY0, 6EP3333-6SC00-0AY0)

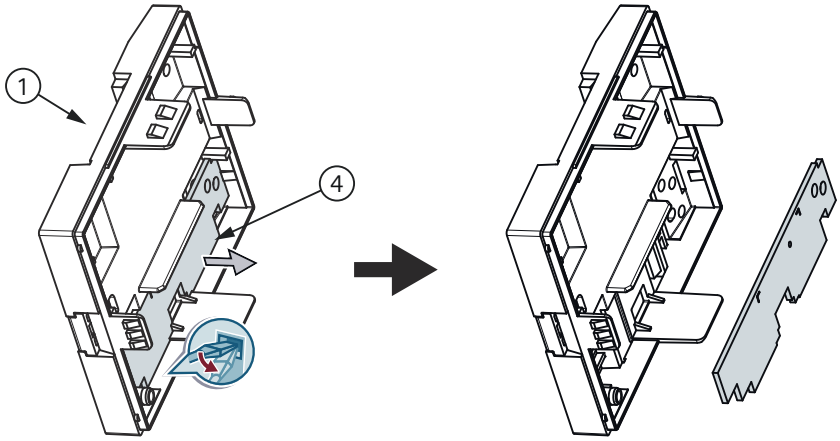

5. Remove the mounting slide by first withdrawing it towards the top or bottom. Then press on the fast release catches on the inside of the rear housing using a slotted screwdriver. Now completely withdraw the mounting slide.

Explanation of substances and components

5

Components according to Directive 2012/19/EU Annex VII

You must remove at least the following substances, mixtures and components from the product:

Substance/mixture/component	Position	Disassembly step
PCBs with a surface area greater than 10 cm^2	2	Step 2

Received material fractions

6

All results from this process must be managed, handled and disposed of in accordance with applicable waste laws and regulations, including but not limited to the Waste Framework Directive and its national legislation in Europe and worldwide.

The table below lists the most important material fractions. The table does not claim to be complete.

Position	Possible material fractions (not exhaustive)
1, 3	Polycarbonate
1a	POM
2	Copper, aluminum, precious metals, tin
4	Aluminum
5	Silicon-based elastomer (plastic)

Disclaimer of liability

7

The Recycler Guide is for information purposes only.

This Recycler Guide does not guarantee the composition of any product or that the product will retain a specific composition for a specific period of time. Therefore, all warranties, assurances, conditions implied by statute or common law are excluded to the fullest extent permitted by applicable law.

The Recycler Guide provides information about the disassembly process of an appliance so that the components can be assigned to the correct recycling channels. Reuse of dismantled components is not permissible.

Siemens therefore assumes no liability for errors or consequences that may result from the use of this information to the greatest possible legal extent.

Please note that the data in this Recycler Guide cannot be compared to data calculated based on product category rules (PCRs) other than the above standards. The values given are only valid in the specified context and cannot be used directly to create the environmental compatibility assessment of a plant.