Thermocouple measuring transducer - MINI MCR-2-TC-UI - 2902055

Please be informed that the data shown in this PDF Document is generated from our Online Catalog. Please find the complete data in the user's documentation. Our General Terms of Use for Downloads are valid
(http://phoenixcontact.com/download)

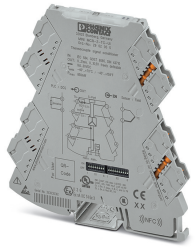

Configurable temperature transducer with plug-in connection technology for connecting thermocouples. Configurable via DIP switch or software. Screw connection technology, standard configuration

Product Description

Configurable, 3-way isolated temperature transducer with plug-in connection technology. The device is suitable for the connection of thermocouples. The measured values are converted into a linear and freely adjustable current or voltage signal. You can configure the device using one of the free software solutions. Default settings can also be made directly on the device by simply using the DIP switches (see configuration table). The measuring transducer supports fault monitoring and NFC communication.

Key Commercial Data

Packing unit	1 pc
GTIN	4 046356 649766
GTIN	4046356649766
Weight per Piece (excluding packing)	120.000 g
Custom tariff number	85437090
Country of origin	Germany

Technical data

Note

Utilization restriction	EMC: class A product, see manufacturer's declaration in the download area

Dimensions

Width	6.2 mm
Height	109.81 mm
Depth	119.2 mm

Thermocouple measuring transducer - MINI MCR-2-TC-UI - 2902055

Technical data

Ambient conditions

Ambient temperature (operation)	-40 °C ... 70 °C
Ambient temperature (storage/transport)	-40 °C ... 85 °C
Maximum altitude	≤ 2000 m
Permissible humidity (operation)	5 % ... 95 % (non-condensing)
Degree of protection	IP20 (not assessed by UL)
Noise immunity	EN 61000-6-2 When being exposed to interference, there may be minimal deviations.

Input data

Configurable/programmable	Yes
Sensor types that can be used (TC)	B, C, E, J, K, N, R, S, T, L, U, A-1, A-2, A-3, M, L
Temperature measuring range	-250 °C ... 2500 °C (Range depends on sensor type, range can be set freely via software or in increments from -150°C to 1350°C via DIP switches)

Output data

Output name	Voltage output / current output
Number of outputs	1
Configurable/programmable	Yes
Voltage output signal	0 V ... 5 V (via DIP switch)
	1 V ... 5 V (via DIP switch)
	0 V ... 10 V (via DIP switch)
	10 V ... 0 V (via DIP switch)
	0 V ... 10.5 V (can be set via software)
Current output signal	0 mA ... 20 mA (via DIP switch)
	4 mA ... 20 mA (via DIP switch)
	20 mA ... 0 mA (via DIP switch)
	20 mA ... 4 mA (via DIP switch)
	0 mA ... 21 mA (can be set via software)
Max. output voltage	approx. 12.3 V
Max. output current	24.6 mA
Short-circuit current	< 31.5 mA
Load/output load voltage output	≥ 10 kΩ
Load/output load current output	≤ 600 Ω (at 20 mA)
Ripple	< 10 mV_{rms}
	< 10 mV_{rms} (at 600 Ω)

Power supply

Thermocouple measuring transducer - MINI MCR-2-TC-UI - 2902055

Technical data

Power supply

Supply voltage range	9.6 V DC ... 30 V DC (The DIN rail bus connector (ME 6,2 TBUS-2 1,5/5-ST-3,81 GN, Item No. 2869728) can be used to bridge the supply voltage. It can be snapped onto a 35 mm DIN rail according to EN 60715))
Typical current consumption	32.7 mA (24 V DC)
	66.8 mA (12 V DC)
Power consumption	≤ 850 mW (at I_{OUT} = 20 mA, 9.6 V DC, 600 Ω load)

Connection data

Connection method	Screw connection
Stripping length	10 mm
Screw thread	M3
Conductor cross section solid	0.2 mm² ... 1.5 mm² (with ferrule)
	0.14 mm² ... 2.5 mm² (without ferrule)
Conductor cross section flexible	0.14 mm² ... 2.5 mm²
Conductor cross section AWG	24 ... 12 (flexible)
Torque	0.5 Nm ... 0.6 Nm

General

Transmission error thermocouples	0.1% * 600 K / set measuring range; 0.1% > 600 K (C, E, J, K, N, T, L, U, M Gost, L Gost)
	0.2 % * 600 K / set measuring range; 0.2 % > 600 K (B, R, S, A1, A2, A3)
	0.2% * 600 K / set measuring range; 0.2% > 600 K (E, J, K, N, T, L, U, M Gost, L Gost); Highspeed Mode
	0.4% * 600 K / set measuring range; 0.4% > 600 K (B, R, S, A1, A2, A3); Highspeed Mode
Maximum temperature coefficient	≤ 0.01 %/K
Typical cold point errors	2 K (2 K + (0,2 K * ΔT))
Protective circuit	Transient protection
Electrical isolation	Reinforced insulation in accordance with IEC 61010-1
Overvoltage category	II
Degree of pollution	2
Rated insulation voltage	300 V (effective)
Test voltage, input/output/supply	3 kV (50 Hz, 1 min.)
Electromagnetic compatibility	Conformance with EMC directive
Noise emission	EN 61000-6-4
Noise immunity	EN 61000-6-2 When being exposed to interference, there may be minimal deviations.
Housing material	PBT
Mounting position	any
Assembly instructions	The T connector can be used to bridge the supply voltage. It can be snapped onto a 35 mm DIN rail according to EN 60715.

Thermocouple measuring transducer - MINI MCR-2-TC-UI - 2902055

Technical data

General

Fire protection for rail vehicles (DIN EN 45545-2) R22	HL 1 - HL 2
Fire protection for rail vehicles (DIN EN 45545-2) R23	HL 1 - HL 2
Fire protection for rail vehicles (DIN EN 45545-2) R24	HL 1 - HL 2

EMC data

Designation	Electromagnetic RF field
Standards/regulations	EN 61000-4-3
Typical deviation from the measuring range final value	0.06 %
Designation	Fast transients (burst)
Standards/regulations	EN 61000-4-4
Typical deviation from the measuring range final value	0.1 %
Designation	Conducted interferences
Standards/regulations	EN 61000-4-6
Typical deviation from the measuring range final value	0.05 %

Standards and Regulations

Electromagnetic compatibility	Conformance with EMC directive
Noise emission	EN 61000-6-4
Standards/regulations	EN 61000-4-2
Designation	Electromagnetic RF field
Standards/regulations	EN 61000-4-3
	EN 61000-4-4
	EN 61000-4-5
Designation	Conducted interferences
Standards/regulations	EN 61000-4-6
Electrical isolation	Reinforced insulation in accordance with IEC 61010-1

Conformance/approvals

Designation	CE
Certificate	CE-compliant
Designation	ATEX
Identification	# II 3 G Ex ec IIC T4 Gc
Certificate	BVS 20 ATEX E 024 X
Designation	UKCA Ex (UKEX)
Identification	# II 3 G Ex ec IIC T4 Gc
Certificate	PxCIF21UKEX2902049X
Designation	IECEx
Identification	Ex ec IIC T4 Gc
Certificate	IECEx BVS 20.0017X

Thermocouple measuring transducer - MINI MCR-2-TC-UI - 2902055

Technical data

Conformance/approvals

Designation	UL, USA / Canada
Identification	UL 508 Listed
	Class I, Div. 2, Groups A, B, C, D T6
	Class I, Zone 2, Group IIC T6
Designation	Shipbuilding approval
Certificate	DNV GL TAA00002UA
Temperature	B
Humidity	B
Vibration	A
EMC	A
Enclosure	Required protection according to the Rules shall be provided upon installation on board

Environmental Product Compliance

REACh SVHC	Lead 7439-92-1
China RoHS	Environmentally Friendly Use Period = 50 years
	For details about hazardous substances go to tab “Downloads”, Category “Manufacturer's declaration”

Drawings

Block diagram

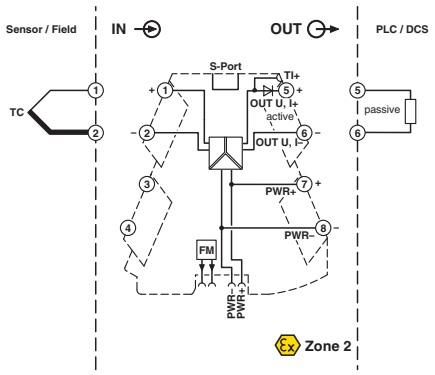

Pictogram

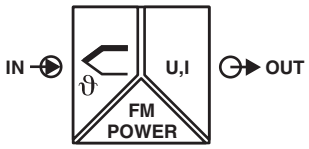

Classifications

eCl@ss

eCl@ss 10.0.1	27210129

Thermocouple measuring transducer - MINI MCR-2-TC-UI - 2902055

Classifications

eCl@ss

eCl@ss 11.0	27210129
eCl@ss 4.0	27200200
eCl@ss 4.1	27200200
eCl@ss 5.0	27200200
eCl@ss 5.1	27200200
eCl@ss 6.0	27200200
eCl@ss 7.0	27200206
eCl@ss 9.0	27210129

ETIM

ETIM 2.0	EC001446
ETIM 3.0	EC001446
ETIM 4.0	EC001446
ETIM 6.0	EC002919
ETIM 7.0	EC002919

UNSPSC

UNSPSC 6.01	30211506
UNSPSC 7.0901	39121008
UNSPSC 11	39121008
UNSPSC 12.01	39121008
UNSPSC 13.2	41112105
UNSPSC 18.0	41112105
UNSPSC 19.0	41112105
UNSPSC 20.0	41112105
UNSPSC 21.0	41112105

Approvals

Approvals

Approvals

UL Listed / cUL Listed / DNV GL / cULus Listed

Ex Approvals

UL Listed / cUL Listed / EAC Ex / ATEX / ATEX / IECEx / cULus Listed

Thermocouple measuring transducer - MINI MCR-2-TC-UI - 2902055

Approvals

Approval details

UL Listed		http://database.ul.com/cgi-bin/XYV/template/LISEXT/1FRAME/index.htm	FILE E 238705

cUL Listed		http://database.ul.com/cgi-bin/XYV/template/LISEXT/1FRAME/index.htm	FILE E 238705

DNV GL		https://approvalfinder.dnvgl.com/	TAA00002UA

cULus Listed	

Accessories

Accessories

Communication module

Communication module - MINI MCR-2-V8-MOD-RTU - 2905634

Eight MINI Analog Pro signal conditioners and measuring transducers can be quickly and easily integrated into a Modbus/RTU network via a communication adapter.

Communication module - MINI MCR-2-V8-MOD-TCP - 2905635

Eight MINI Analog Pro signal conditioners and measuring transducers can be quickly and easily integrated into a Modbus/TCP network via a communication adapter.

Thermocouple measuring transducer - MINI MCR-2-TC-UI - 2902055

Accessories

Communication module - MINI MCR-2-V8-PB-DP - 2905636

Eight MINI Analog Pro signal conditioners and measuring transducers can be quickly and easily integrated into a PROFIBUS DP network via a communication adapter.

Controller board

System adapter - MINI MCR-2-V8-FLK 16 - 2901993

Eight MINI Analog Pro signal conditioners and measuring transducers can be connected to a controller with minimal cabling effort and without any errors using system adapters and system cabling.

Device marking

Marker for end clamp - UCT-EM (30X5) - 0801505

Marker for end clamp, Sheet, white, unlabeled, can be labeled with: TOPMARK NEO, TOPMARK LASER, BLUEMARK ID COLOR, BLUEMARK ID, BLUEMARK CLED, THERMOMARK PRIME, THERMOMARK CARD 2.0, THERMOMARK CARD, mounting type: snapped, lettering field size: 30 x 5 mm, Number of individual labels: 24

Plastic label - UC-EMLP (15X5) - 0819301

Plastic label, Sheet, white, unlabeled, can be labeled with: BLUEMARK ID COLOR, BLUEMARK ID, BLUEMARK CLED, PLOTMARK, CMS-P1-PLOTTER, mounting type: adhesive, lettering field size: 15 x 5 mm, Number of individual labels: 10

Plastic label - UC-EMLP (15X5) YE - 0822615

Plastic label, Sheet, yellow, unlabeled, can be labeled with: BLUEMARK ID COLOR, BLUEMARK ID, BLUEMARK CLED, PLOTMARK, CMS-P1-PLOTTER, mounting type: adhesive, lettering field size: 15 x 5 mm, Number of individual labels: 10

Thermocouple measuring transducer - MINI MCR-2-TC-UI - 2902055

Accessories

Plastic label - UC-EMLP (15X5) SR - 0828095

Plastic label, Sheet, silver, unlabeled, can be labeled with: BLUEMARK ID COLOR, BLUEMARK ID, BLUEMARK CLED, PLOTMARK, CMS-P1-PLOTTER, mounting type: adhesive, lettering field size: 15 x 5 mm, Number of individual labels: 10

Plastic label - US-EMLP (15X5) - 0828790

Plastic label, Card, white, unlabeled, can be labeled with: BLUEMARK ID COLOR, BLUEMARK ID, THERMOMARK PRIME, THERMOMARK CARD 2.0, THERMOMARK CARD, mounting type: adhesive, lettering field size: 15 x 5 mm, Number of individual labels: 189

Plastic label - US-EMLP (15X5) YE - 0828873

Plastic label, Card, yellow, unlabeled, can be labeled with: BLUEMARK ID COLOR, BLUEMARK ID, THERMOMARK PRIME, THERMOMARK CARD 2.0, THERMOMARK CARD, mounting type: adhesive, lettering field size: 15 x 5 mm, Number of individual labels: 189

Plastic label - US-EMLP (15X5) SR - 0828874

Plastic label, Card, silver, unlabeled, can be labeled with: BLUEMARK ID COLOR, BLUEMARK ID, THERMOMARK PRIME, THERMOMARK CARD 2.0, THERMOMARK CARD, mounting type: adhesive, lettering field size: 15 x 5 mm, Number of individual labels: 189

Marker for end clamp - UCT-EM (30X5) YE - 0830340

Marker for end clamp, Sheet, yellow, unlabeled, can be labeled with: TOPMARK NEO, TOPMARK LASER, BLUEMARK ID COLOR, BLUEMARK ID, BLUEMARK CLED, THERMOMARK PRIME, THERMOMARK CARD 2.0, THERMOMARK CARD, mounting type: snapped, lettering field size: 30 x 5 mm, Number of individual labels: 24

DIN rail connector

Thermocouple measuring transducer - MINI MCR-2-TC-UI - 2902055

Accessories

DIN rail bus connectors - ME 6,2 TBUS-2 1,5/5-ST-3,81 GY - 2695439

DIN rail connector (TBUS), 5-pos., for bridging the supply voltage, can be snapped onto NS 35/... DIN rails according to EN 60715

DIN rail bus connectors - ME 6,2 TBUS-2 1,5/5-ST-3,81 GN - 2869728

DIN rail connector for DIN rail mounting. Universal for TBUS housing. Gold-plated contacts, 5-pos.

Evaluation unit

Monitoring module - MINI MCR-2-FM-RC - 2904504

Fault monitoring module with plug-in connection technology for evaluating and reporting group errors from the FM system and for monitoring the supply voltages. Error message via N/C contact. Screw connection technology, standard configuration

---

Monitoring module - MINI MCR-2-FM-RC-PT - 2904508

Fault monitoring module with plug-in connection technology for evaluating and reporting group errors from the FM system and for monitoring the supply voltages. Error message via N/C contact. Push-in connection technology, standard configuration

---

Labeled device marker

Marker for end clamp - UCT-EM (30X5) CUS - 0801589

Marker for end clamp, can be ordered: by sheet, white, labeled according to customer specifications, mounting type: snapped into marker carrier, lettering field size: 30 x 5 mm, Number of individual labels: 24

Thermocouple measuring transducer - MINI MCR-2-TC-UI - 2902055

Accessories

Plastic label - UC-EMLP (15X5) CUS - 0824550

Plastic label, can be ordered: by sheet, white, labeled according to customer specifications, mounting type: adhesive, lettering field size: 15 x 5 mm

Plastic label - UC-EMLP (15X5) YE CUS - 0824551

Plastic label, can be ordered: by sheet, yellow, labeled according to customer specifications, mounting type: adhesive, lettering field size: 15 x 5 mm

Plastic label - UC-EMLP (15X5) SR CUS - 0828099

Plastic label, can be ordered: by sheet, silver, labeled according to customer specifications, mounting type: adhesive, lettering field size: 15 x 5 mm, Number of individual labels: 10

Plastic label - US-EMLP (15X5) CUS - 0830076

Plastic label, can be ordered: by card, white, labeled according to customer specifications, mounting type: adhesive, lettering field size: 15 x 5 mm, Number of individual labels: 189

Plastic label - US-EMLP (15X5) YE CUS - 0830077

Plastic label, can be ordered: by card, yellow, labeled according to customer specifications, mounting type: adhesive, lettering field size: 15 x 5 mm, Number of individual labels: 189

Thermocouple measuring transducer - MINI MCR-2-TC-UI - 2902055

Accessories

Plastic label - US-EMLP (15X5) SR CUS - 0830078

Plastic label, can be ordered: by card, silver, labeled according to customer specifications, mounting type: adhesive, lettering field size: 15 x 5 mm, Number of individual labels: 189

Marker for end clamp - UCT-EM (30X5) YE CUS - 0830348

Marker for end clamp, can be ordered: by sheet, yellow, labeled according to customer specifications, mounting type: snapped into marker carrier, lettering field size: 30 x 5 mm, Number of individual labels: 24

Power module

Power terminal block - MINI MCR-2-PTB - 2902066

Power terminal with plug-in connection technology for delivering the supply voltage to the DIN rail connector. Monitoring of the supply voltages in combination with the fault monitoring module. Screw connection technology

---

Power terminal block - MINI MCR-2-PTB-PT - 2902067

Power terminal with plug-in connection technology for delivering the supply voltage to the DIN rail connector. Monitoring of the supply voltages in combination with the fault monitoring module. Push-in connection technology

---

Power supply

Power supply unit - QUINT4-SYS-PS/1AC/24DC/2.5/SC - 2904614

Primary-switched power supply unit, QUINT POWER, Screw connection, DIN rail mounting, input: 1-phase, output: 24 V DC / 2.5 A

Thermocouple measuring transducer - MINI MCR-2-TC-UI - 2902055

Accessories

Programming adapter

Programming adapter - IFS-USB-PROG-ADAPTER - 2811271

Programming adapter with USB interface, for programming with software. The USB driver is included in the software solutions for the products to be programmed, such as measuring transducers or motor managers.

Adapter - IFS-BT-PROG-ADAPTER - 2905872

Bluetooth adapter with micro USB and S-PORT interface for wireless communication with the MINI Analog, MINI Analog Pro, MACX Analog, INTERFACE system gateways, and PLC logic device series.

Programming adapter - TWN4 MIFARE NFC USB ADAPTER - 2909681

Near Field Communication (NFC) programming adapter with USB interface for the wireless configuration of NFC-capable products from PHOENIX CONTACT with software. No separate USB driver is required.

Terminal marking

Marker strip - SK 5,0 WH:REEL - 0805221

Marker strip, Roll, white, unlabeled, can be labeled with: THERMOMARK ROLL 2.0, THERMOMARK ROLL, THERMOMARK ROLL X1, THERMOMARK ROLLMASTER 300/600, THERMOMARK X1.2, mounting type: adhesive, for terminal block width: 5 mm, lettering field size: continuous x 5 mm, Number of individual labels: 90000

Phoenix Contact 2021 © - all rights reserved
http://www.phoenixcontact.com