MP22SLRINRG006S5 Datasheet

Product Name // MP22SLRINRG006S5 Ring Illumination Vandal Resistant Switch

View Product Page

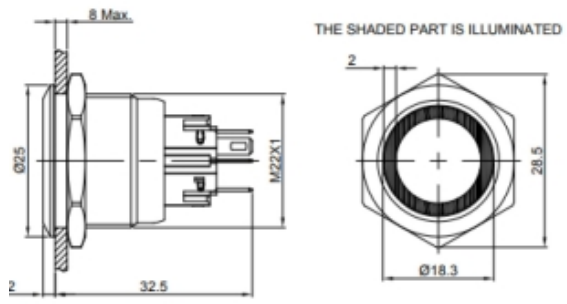

// Product Description:

- MP22 Range
- SPDT
- Latching
- Ring Illumination
- Green
- 6V
- Stainless Steel
- IP65

// General Information:

Product Display Title:	Ring Illumination Vandal Resistant Switch
Product Family:	Switch Range
Product Series:	Vandal Resistant Switches
Bezel Finish:	Machined
Body Colour:	Stainless Steel
Body Material:	Stainless Steel
Body Material Type:	Metal
Current Rating:	5A 250V
Diameter:	22mm
Dielectric Withstanding Voltage:	1500V
Durability:	50,000
Function:	Push Button Switch
Illumination Colour:	Green
Illumination Shape:	Ring
Illumination Voltage:	6V
Ip Rating:	IP65
Lamp Type:	LED
Material Finish:	Machined
Max Operating Temperature:	55°C
Min Operating Temperature:	-25°C
Max Panel Thickness:	8mm
Operating Humidity:	45~85 RH(Non condensing)
Panel Cut Out:	22mm Diameter circle
Rohs Compliant:	Yes
Switch Body Colour:	Stainless Steel
Switch Body Material:	Stainless Steel
Switch Button Colour:	Stainless Steel
Switch Button Material:	Stainless Steel
Switch Circuit:	SPDT
Switch Series:	MP22
Switch Shape:	Round
Switch Type:	Pushbutton
Switching Type:	Latching
Thread Size:	M22

// Product PDF Links

22mm Vandal Resistant Switch

// Product 3D CAD Model Links

MP22SLRINRG006S53D CAD Model