VANDAL RESISTANT PUSHBUTTONS

ALTERNATE ACTION, SEALED AGAINST DUST & MOISTURE

The P5-V switch gives you all the functionality of the P5 Alternate Action switch with the added benefit of an aluminum security level case and button or a stainless steel vandal resistant case and button.

Push and the P5-V switch turns "on." Push again and the switch turns "off." Positive tactile feedback is featured so the operator is clearly aware the switch has been actuated. The button returns to the original position after each actuation.

To guard against front panel splash and dirt the P5-V is sealed at the button with OTTO's patented "rolling sleeve" design. The terminals are sealed with epoxy, providing a seal against flux during wiring and behind panel dirt and moisture. The combination of sealing provides smooth operation over a wide temperature range. Watertight sealing to IP68S and IP69K is also available.

We are able to provide custom button engraving with epoxy ink backfill and other special characters, shrouded buttons, contact configurations and materials to suit your application requirements.

High Profile
Flat Button

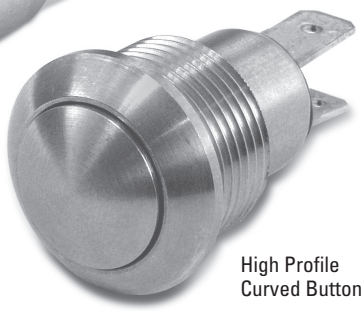

High Profile
Curved Button

Features:

- **Security (aluminum) or vandal resistant (stainless steel) case & button**
- **Button sealed with patented "rolling sleeve" design**
- **Contact area sealed at case & terminals**
- **Watertight to IP68S and IP69K or dusttight & moistureproof to IP64**
- **Less than 25mΩ contact resistance**
- **Handles low level up to 10 amps**
- **1 million mechanical cycle life**
- **RoHS & WEEE Compliant**

Standard Characteristics/Ratings:	
ELECTRICAL RATINGS:	
Load	**Sea Level @ 28VDC or 115VAC, 60/400Hz**
Resistive	10A
Inductive	5A
Lamp	1A
Motor	3A
DWV	1050Vrms
Low Level	10mA @ 30mV
Electrical Life:	25,000 cycles
Mechanical Life:	1,000,000 cycles
Seal:	IP64 or IP68S and IP69K
Operating Temp Range:	-55°C to +85°C
Operating Force:	3.0 lbs. +1/-0.5 lb.
Total Travel:	0.180 inches max
Overtravel:	0.012 inches min
MATERIALS:	
Case:	Anodized aluminum alloy or stainless steel
Button:	Anodized aluminum alloy or stainless steel
Terminals:	Brass with gold over silver
Terminal Hardware:	Screw, lockwasher and terminal lug when applicable
Mounting Hardware:	Hex nut or knurl nut, lockwasher and panel seal when applicable

VANDAL RESISTANT PUSHBUTTONS

SEALED AGAINST DUST & MOISTURE

High Profile, Flat Button
Bezel Profile/Button Style 1

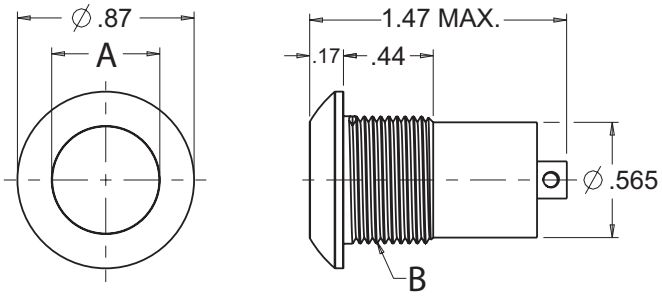

Low Profile, Curved Button
Bezel Profile/Button Style 4

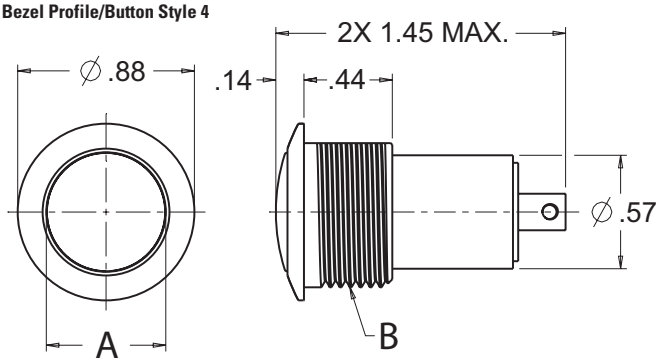

High Profile, Curved Button
Bezel Profile/Button Style 2

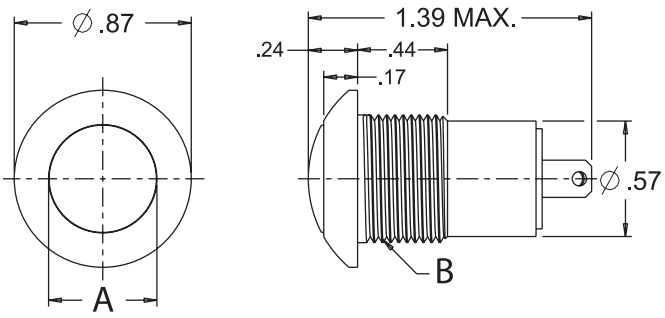

Flush Mount, Flat Button
Bezel Profile/Button Style 5

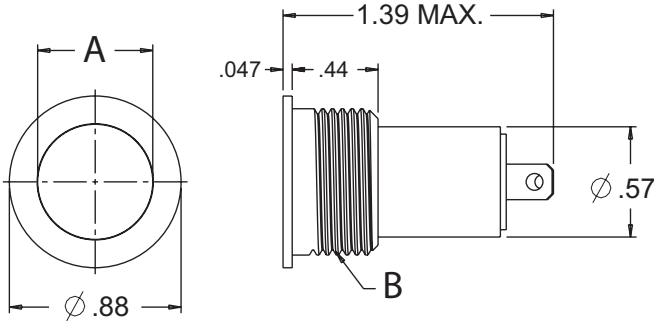

Low Profile, Flat Button
Bezel Profile/Button Style 3

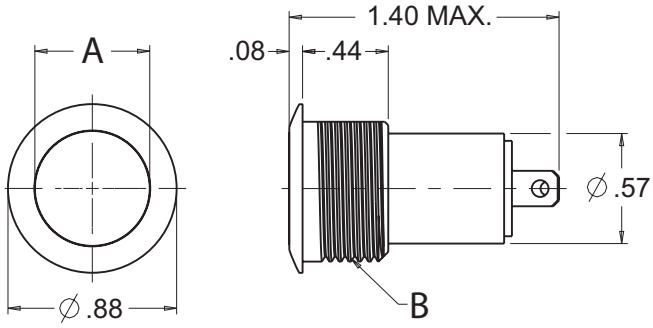

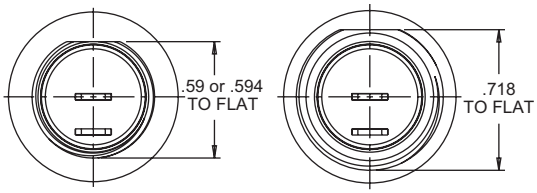

.625-24 UNEF-2A .750-20 UNEF-2A

Case Style		
Dimension	**1 - 4**	**5 - 8**
A (Button Dia.)	0.53	0.590
B (Thread)	0.625-24 UNEF-2A	0.750-20 UNEF-2A
D-Flat	0.59 or 0.594	0.718

P5-V PART NUMBER CODE

P5 – X X X X X X

Type

V. Stainless
A. Aluminum

Thread

1. 5/8-24 & Hex Nut
2. 5/8-24 & Knurl Nut
3. 5/8-24 W/D–Flat & Hex Nut
4. 5/8-24 W/D–Flat & Knurl Nut
5. 3/4-20 & Hex Nut
6. 3/4-20 & Knurl Nut
7. 3/4-20 W/D–Flat & Hex Nut
8. 3/4-20 W/D–Flat & Knurl Nut

Terminal Style/ Bezel Color

1. Solder Terminal/Silver
2. Screw Terminal/Silver ②
3. Solder Terminal/Black ①
4. Screw Terminal/Black ①②

Circuit Form/ Contact Material

1. SPST/Silver
2. SPST/Gold
3. SPDT/Silver
4. SPDT/Gold

Seal

1. Dusttight
2. Watertight

Bezel Profile/ Button

1. High Profile/Flat Button
2. High Profile/Curved Button
3. Low Profile/Flat Button
4. Low Profile/Curved Button
5. Flush Profile

① Only Available on P5-A Styles.
② Screw terminals available on SPST circuits only.

Specifications Subject To Change Without Notice