THIS DRAWING IS UNPUBLISHED. RELEASED FOR PUBLICATION AUG ,2006.
© COPYRIGHT – BY TYCO ELECTRONICS CORPORATION. ALL RIGHTS RESERVED.

LOC	DIST
DW	–

REVISIONS

P	LTR	DESCRIPTION	DATE	DWN	APVD
	G	REVISED. (ECR-10-026339)	23MAY11	JC	WK

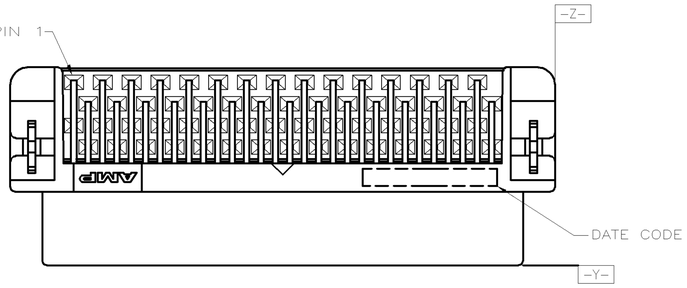

FOR 40,60,68,80,100,120, 140,160,180,200 POSITIONS ONLY

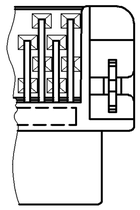

FOR 50, AND 130 POSITIONS ONLY

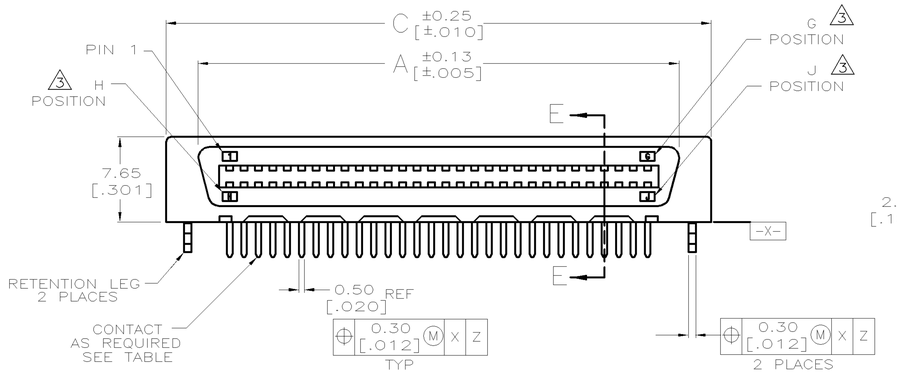

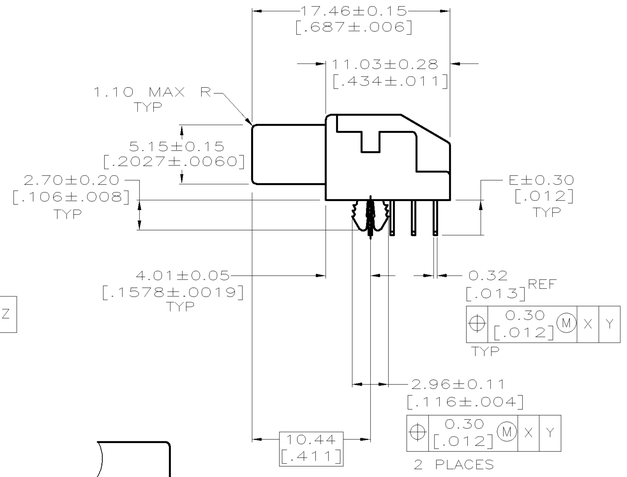

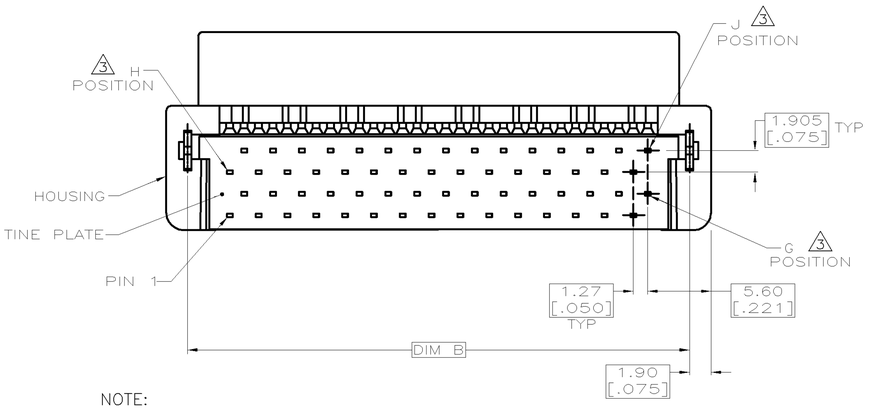

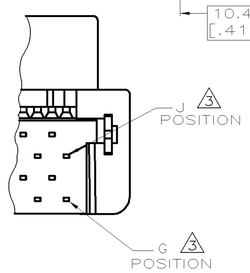

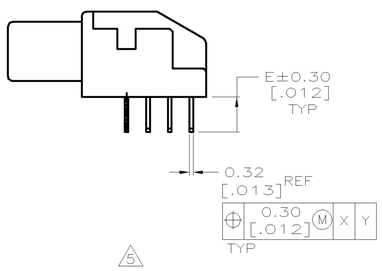

5 WITHOUT RETENTION LEG

NOTES	E	D	C	B	A	G 3	J 3	H 3	GOLD PLATED	PART NUMBER	POS.
	3.10 [.122]	102.03 [4.017]	111.53 [4.391]	107.73 [4.242]	105.87 [4.168]	80	160	81	GOLD FLASH	5-1734037-6	160
									0.381um[15u"]	3-1734037-6	
									7	1-1734037-6	
	3.10 [.122]	89.33 [3.517]	98.83 [3.891]	95.03 [3.742]	93.17 [3.668]	70	140	71	GOLD FLASH	5-1734037-4	140
									0.381um[15u"]	3-1734037-4	
									7	1-1734037-4	
	3.10 [.122]	76.63 [3.017]	86.13 [3.391]	82.33 [3.242]	80.47 [3.168]	60	120	61	GOLD FLASH	2-1734037-0	120
									0.381um[15u"]	1-1734037-8	
									7	1-1734037-2	
5	3.10 [.122]	63.93 [2.517]	73.43 [2.891]	69.63 [2.742]	67.77 [2.668]	50	100	51	GOLD FLASH	5-1734037-1	100
									0.381um[15u"]	3-1734037-1	
									7	1-1734037-1	
	3.10 [.122]	63.93 [2.517]	73.43 [2.891]	69.63 [2.742]	67.77 [2.668]	50	100	51	GOLD FLASH	5-1734037-0	
									0.381um[15u"]	3-1734037-0	
									7	1-1734037-0	
	3.10 [.122]	43.61 [1.717]	53.11 [2.091]	49.31 [1.941]	47.45 [1.868]	34	68	35	GOLD FLASH	4-1734037-7	68
									0.381um[15u"]	2-1734037-7	
									7	1734037-7	
	3.10 [.122]	– –	48.03 [1.891]	44.23 [1.742]	42.37 [1.668]	30	60	31	GOLD FLASH	4-1734037-6	60
									0.381um[15u"]	2-1734037-6	
									7	1734037-6	
	3.10 [.122]	32.18 [1.267]	41.68 [1.641]	37.88 [1.492]	36.02 [1.418]	25	50	26	GOLD FLASH	4-1734037-5	50
									0.381um[15u"]	2-1734037-5	
									7	1734037-5	
	3.10 [.122]	25.83 [1.017]	35.33 [1.391]	31.53 [1.242]	29.67 [1.168]	20	40	21	GOLD FLASH	4-1734037-4	40
									0.381um[15u"]	2-1734037-4	
									7	1734037-4	
5	2.40 [.094]	51.23 [2.017]	60.73 [2.391]	56.93 [2.242]	55.07 [2.168]	40	80	41	7	6-1734037-2	80
	2.40 [.094]	51.23 [2.017]	60.73 [2.391]	56.93 [2.242]	55.07 [2.168]	40	80	41	GOLD FLASH	4-1734037-2	
									0.381um[15u"]	2-1734037-2	
									7	1734037-2	
	3.10 [.122]	51.23 [2.017]	60.73 [2.391]	56.93 [2.242]	55.07 [2.168]	40	80	41	GOLD FLASH	4-1734037-1	
									0.381um[15u"]	2-1734037-1	
									7	1734037-1	

NOTE:
1. MATERIAL:
   HOUSING: LIQUID CRYSTAL POLYMER (LCP), UL 94V-0, BLACK COLOR.
   CONTACTS: PHOSPHOR BRONZE.
   BOARDLOCKS: BRASS.
2. FINISH:
   CONTACTS: (SEE TABLE) GOLD PLATED ON CONTACT AREA,
   3.81um [150u"] MIN. MATTE-TIN ON SOLDERTAIL, OVER
   1.27mm [50m"] MIN. NICKEL UNDERPLATED.
   BOARDLOCKS: 3.81um [150u"] MIN. TIN-Cu OVER
   1.27mm [50m"] MIN. UNDERPLATED.
3. G, J, AND H INDICATES NUMBER OF POSITION MARKED ON ASSEMBLY. ALSO SEE TABLE.
4. CONNECTOR SOLDER TAILS WILL ACCOMMODATE PRINTED CIRCUIT BOARD THICKNESS OF 0.80 TO 1.60 [.031 TO .063].
5. BOARDLOCKS NOT PRESENT.
6. WAVE SOLDER CAPABLE TO 265°C PER TEST SPEC. 109-202, CONDITION B.
7. GOLD FLASH OVER 0.762μm [30μ"] MIN. PALLADIUM-NICKEL PLATED.

THIS DRAWING IS A CONTROLLED DOCUMENT.

DIMENSIONS: MM

TOLERANCES UNLESS OTHERWISE SPECIFIED:

0 PLC	± –
1 PLC	± 0.3
2 PLC	± 0.2
3 PLC	± –
4 PLC	± –
ANGLES	± 3°

MATERIAL: SEE NOTE

FINISH: SEE NOTE

DWN	F. YANG	31MAR2009
CHK	S. CHIEN	31MAR2009
APVD	W. KODAMA	31MAR2009

PRODUCT SPEC: 108-57876

QUALIFICATION TEST REPORT: –

WEIGHT: –

CUSTOMER DRAWING

TE Connectivity

NAME: RECEPTACLE ASSEMBLY, R/A, BTB, CHAMP.050, SERIES I

SIZE	CAGE CODE	DRAWING NO	RESTRICTED TO
A3	00779	C-1734037	–

SCALE	SHEET	REV
–	1 OF 4	G

THIS DRAWING IS UNPUBLISHED. RELEASED FOR PUBLICATION AUG ,2006.
© COPYRIGHT – BY TYCO ELECTRONICS CORPORATION. ALL RIGHTS RESERVED.

LOC	DIST
DW	—

REVISIONS

P	LTR	DESCRIPTION	DATE	DWN	APVD
		SEE SHEET 1.			

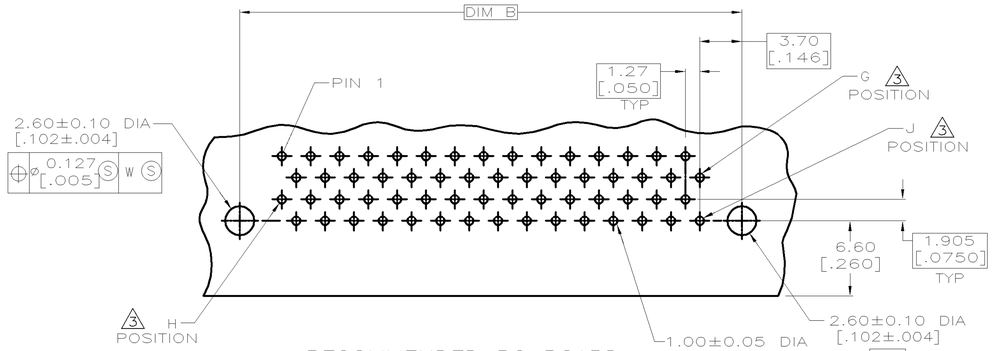

RECOMMENDED PC BOARD MOUNTING DIMENSIONS COMPONENT SIDE

FOR 40, 60, 68, 80, 100, 120, 140 160, 180, AND 200 POSITIONS ONLY

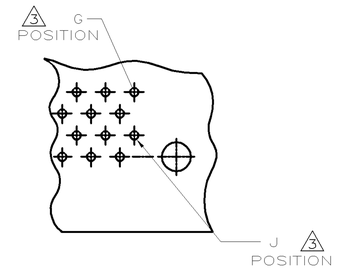

FOR 50, AND 130 POSITIONS ONLY

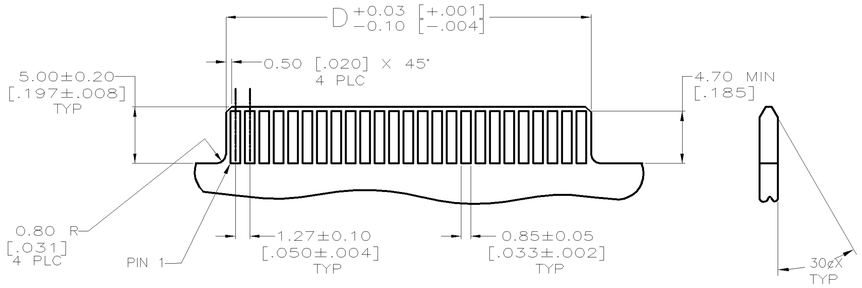

RECOMMENDED CARD EDGE LAYOUT

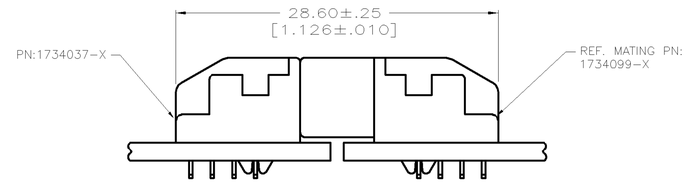

RIGHT ANGLE RECEPTACLE ASSEMBLY MATED TO RIGHT ANGLE PLUG ASSEMBLY

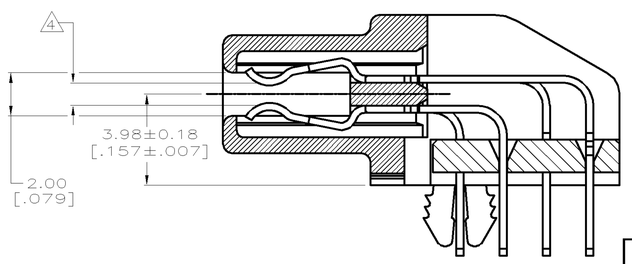

SECTION E–E
SCALE 8:1

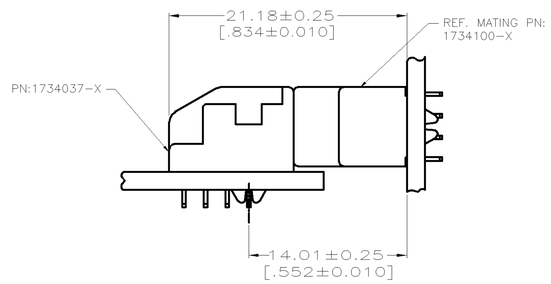

RIGHT ANGLE RECEPTACLE ASSEMBLY MATED TO VERTICAL PLUG ASSEMBLY

THIS DRAWING IS A CONTROLLED DOCUMENT.

DIMENSIONS: MM

TOLERANCES UNLESS OTHERWISE SPECIFIED:

0 PLC	± –
1 PLC	± –
2 PLC	± –
3 PLC	± –
4 PLC	± –
ANGLES	± –

MATERIAL –

FINISH –

DWN

CHK

APVD

PRODUCT SPEC —

APPLICATION SPEC —

WEIGHT —

TE Connectivity

NAME

RECEPTACLE ASSEMBLY, R/A, BTB, CHAMP.050, SERIES I

SIZE	CAGE CODE	DRAWING NO	RESTRICTED TO
A3	00779	C-1734037	—

CUSTOMER DRAWING

SCALE — SHEET 2 OF 4 REV G

THIS DRAWING IS UNPUBLISHED. RELEASED FOR PUBLICATION AUG ,2006.
© COPYRIGHT – BY TYCO ELECTRONICS CORPORATION. ALL RIGHTS RESERVED.

LOC	DIST
DW	—

REVISIONS

P	LTR	DESCRIPTION	DATE	DWN	APVD
		SEE SHEET 1.			

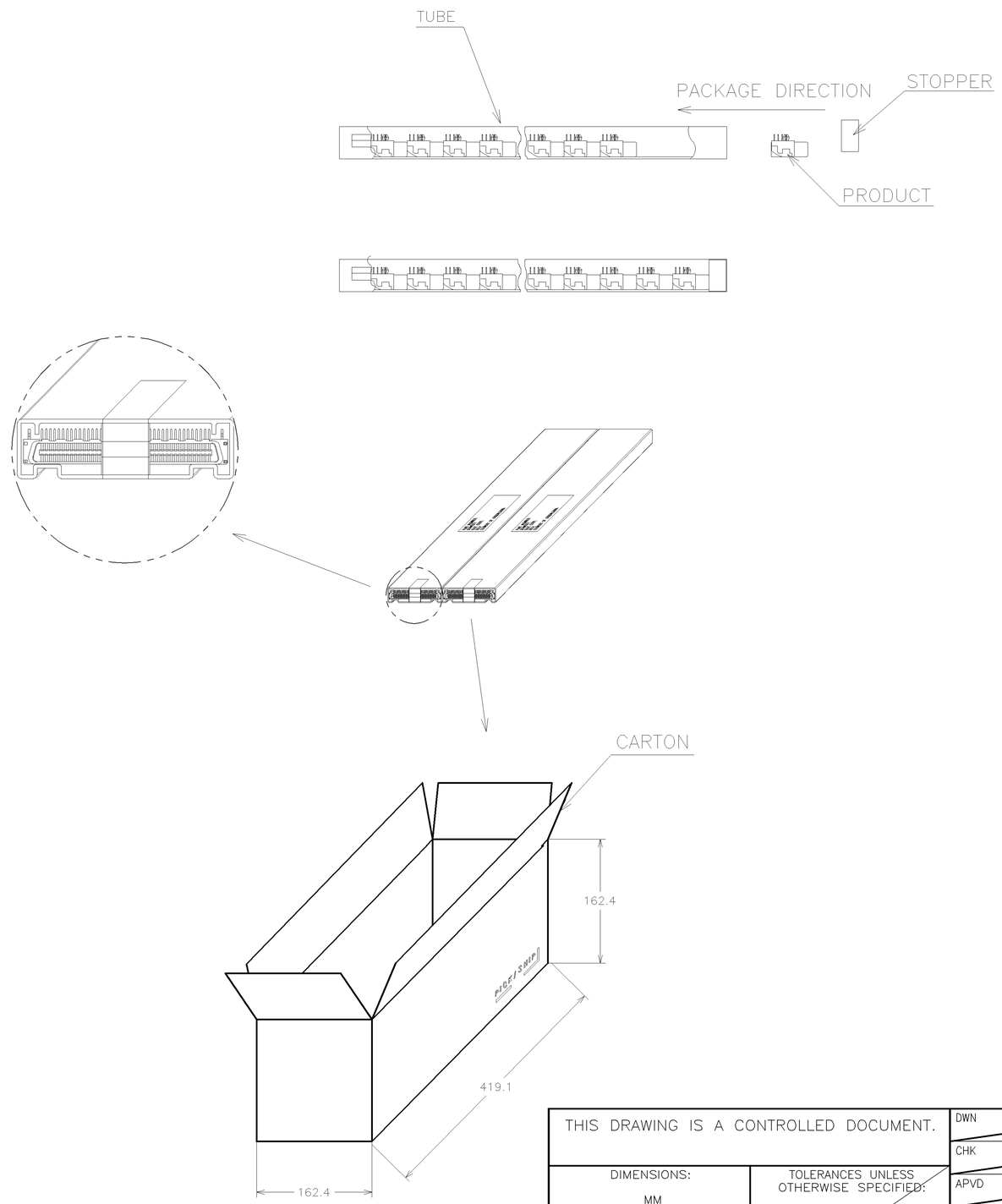

POS.	Q'TY/ TUBE	TUBE/ BOX	Q'TY/ BOX	N/W (KG)	G/W (KG)	PART NUMBER
80	21	16	336	2.06	2.91	6–1734037–2
						4–1734037–2
						2–1734037–2
						1734037–2
100	21	16	336	2.55	3.40	5–1734037–0
						3–1734037–0
						1–1734037–0
80	21	16	336	2.08	2.93	4–1734037–1
						2–1734037–1
						1734037–1

THIS DRAWING IS A CONTROLLED DOCUMENT.

DIMENSIONS: MM

TOLERANCES UNLESS OTHERWISE SPECIFIED:
0 PLC ± –
1 PLC ± –
2 PLC ± –
3 PLC ± –
4 PLC ± –
ANGLES ± –

MATERIAL –

FINISH –

DWN
CHK
APVD
PRODUCT SPEC —
APPLICATION SPEC —
WEIGHT —

TE Connectivity

NAME
RECEPTACLE ASSEMBLY, R/A, BTB, CHAMP.050, SERIES I

SIZE	CAGE CODE	DRAWING NO	RESTRICTED TO
A3	00779	C–1734037	—

CUSTOMER DRAWING | SCALE — | SHEET 3 OF 4 | REV G

AMP 1470–19 REV 31MAR2000

THIS DRAWING IS UNPUBLISHED. RELEASED FOR PUBLICATION AUG ,2006.
© COPYRIGHT – BY TYCO ELECTRONICS CORPORATION. ALL RIGHTS RESERVED.

LOC	DIST
DW	—

REVISIONS

P	LTR	DESCRIPTION	DATE	DWN	APVD
		SEE SHEET 1.			

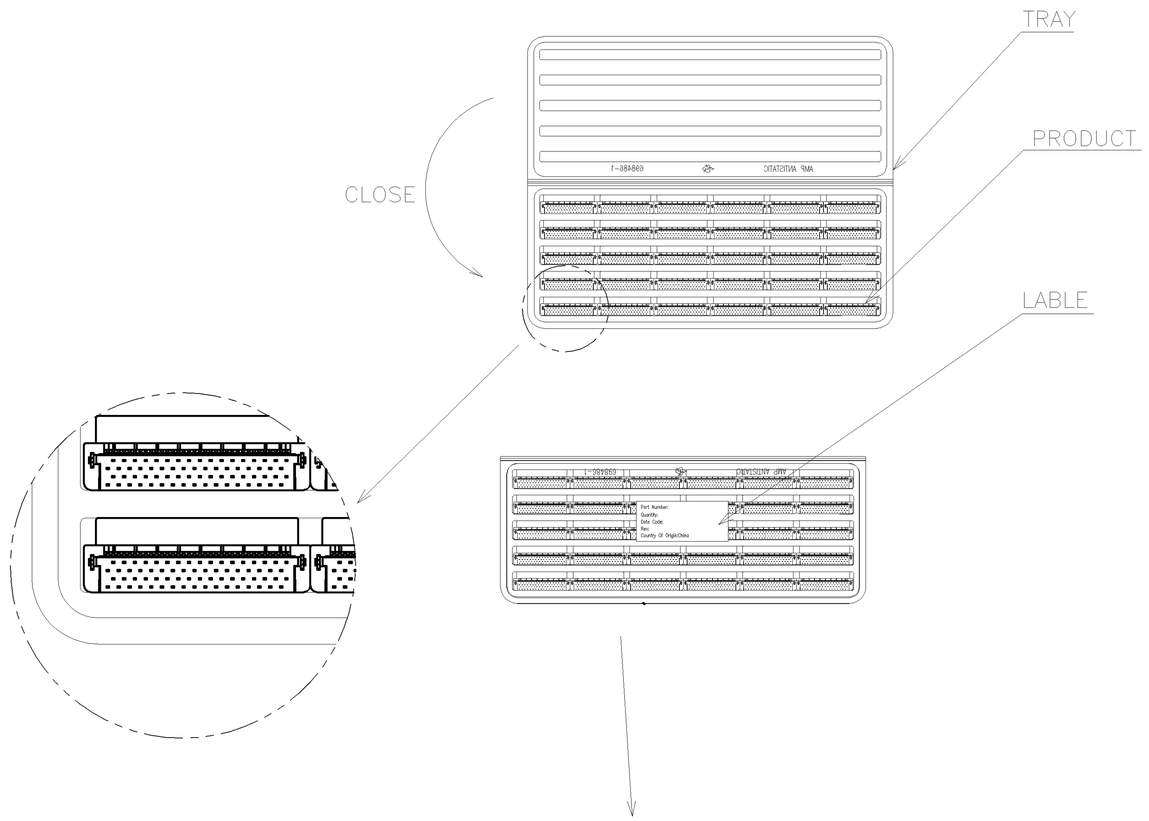

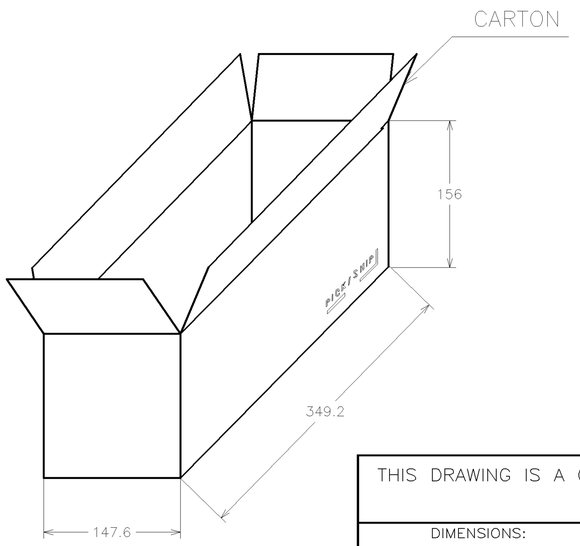

POS.	Q'TY/ TRAY	TRAY/ BOX	Q'TY/ BOX	N/W (KG)	G/W (KG)	PART NUMBER
160	10	10	100	1.33	2.28	5–1734037–6
						3–1734037–6
						1–1734037–6
140	15	10	150	1.67	2.62	5–1734037–4
						3–1734037–4
						1–1734037–4
120	15	10	150	1.35	2.30	2–1734037–0
						1–1734037–8
						1–1734037–2
100	20	10	200	1.43	2.43	5–1734037–1
						3–1734037–1
						1–1734037–1
68	30	10	300	1.65	2.60	4–1734037–7
						2–1734037–7
						1734037–7
60	30	10	300	1.60	2.60	4–1734037–6
						2–1734037–6
						1734037–6
50	35	10	350	1.55	2.50	4–1734037–5
						2–1734037–5
						1734037–5
40	45	10	450	1.55	2.45	4–1734037–4
						2–1734037–4
						1734037–4

THIS DRAWING IS A CONTROLLED DOCUMENT.

DIMENSIONS: MM

TOLERANCES UNLESS OTHERWISE SPECIFIED:
0 PLC ± –
1 PLC ± –
2 PLC ± –
3 PLC ± –
4 PLC ± –
ANGLES ± –

MATERIAL –
FINISH –

DWN
CHK
APVD
PRODUCT SPEC —
APPLICATION SPEC —
WEIGHT —

TE Connectivity

NAME
RECEPTACLE ASSEMBLY, R/A, BTB, CHAMP.050, SERIES I

SIZE	CAGE CODE	DRAWING NO	RESTRICTED TO
A3	00779	C-1734037	—

CUSTOMER DRAWING | SCALE — | SHEET 4 OF 4 | REV G