© 2023 TE Connectivity. All Rights Reserved.

REVISIONS					
P	LTR	DESCRIPTION	DATE	DWN	APVD
	1	NEW DRAWING	01JUN2023	DC	JH
	2	MODIY NOTE TYPO	17JUL2023	DC	JH
	A	GTP PER ECN-23-225969	25JUL2023	DC	JH

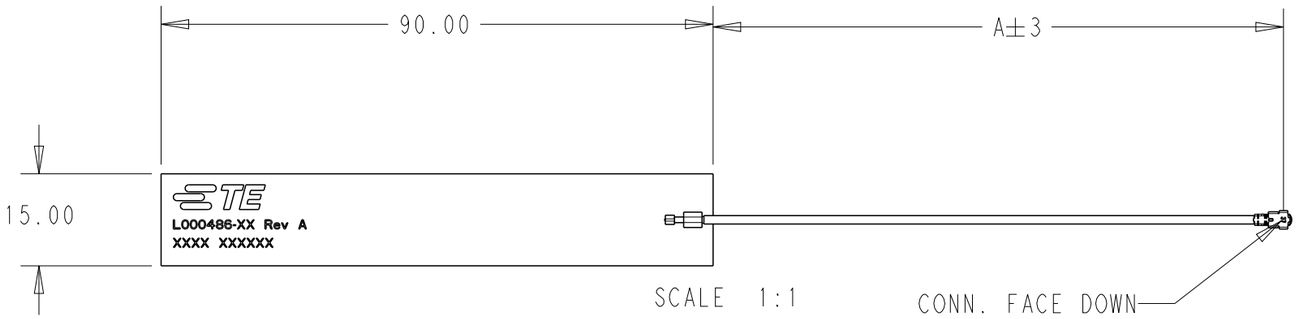

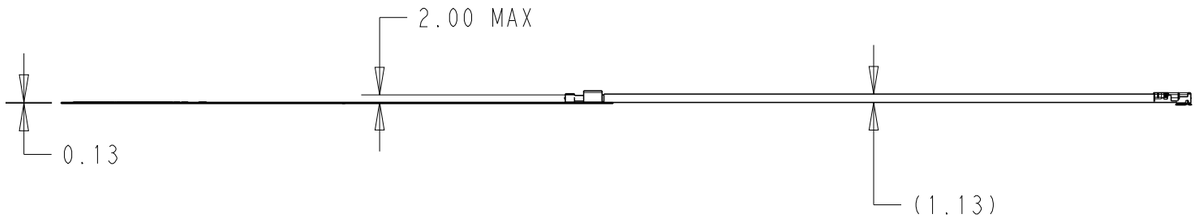

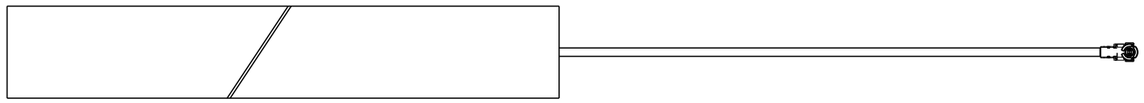

ASSEMBLY NOTES:

1. FABRICATE TO MEET IPC - 6013, CLASS 2.
   INSPECT TO MEET IPC - A - 600, CLASS 2.
2. MATERIAL
   A. PI FILM + ADHESIVE
   B. COAX CABLE DIA 1.13, IPEX OR EQUIVALENT
3. FINISH
   A. SOLDERMASK BOTH SIDE ORANGE
4. GENERAL TOLERANCE : +/-0.2
5. PACKAGE SIGNGULATED PARTS TO BE SECURELY
   BAG WRAPPED, BAGGED OR VACCUM PACKAGE IN BULK
6. CONSULT TE CONNECTIVITY DS_L000486
7. SILKSCREEN, WHITE EPOXY INK
   A. TE LOGO P/N
   B. WORD REV, FOLLOWED BY LATEST REVISION LETTER AS SHOWN
   C. 4 DIGI DATE CODE; FIRST 2 DIGITS FOR THE WEEK CODE AND
      OTHERS : SPECIFIC TE SOURCE CODE NUMBER DIGITS AS REQUIRE

CONNECTOR TYPE	"A" CABLE	PART NUMBER
MHF 4L	200.00	L000486-08
	150.00	L000486-07
	100.00	L000486-06
	50.00	L000486-05
MHF	200.00	L000486-04
	150.00	L000486-03
	100.00	L000486-02
	50.00	L000486-01

THIS DRAWING IS A CONTROLLED DOCUMENT.

DIMENSIONS: mm

TOLERANCES UNLESS OTHERWISE SPECIFIED:
0 PLC ±-
1 PLC ±-
2 PLC ±-
3 PLC ±-
4 PLC ±-
ANGLES ±-

MATERIAL: TBD
material_2

FINISH: -
finish_spec_2

DWN DC 01JUN2023
CHK SJ 01JUN2023
APVD JH 01JUN2023
PRODUCT SPEC -
APPLICATION SPEC -
WEIGHT -

CUSTOMER DRAWING

TE Connectivity

NAME: FPC ANT, HDP, CEL, 698-5000HMz
-

SIZE	CAGE CODE	DRAWING NO	RESTRICTED TO
A3	00779	C-L000486	-

SCALE 1:2 | SHEET 1 OF 1 | REV A

1470-19 (3/13)