Technical data

51130

One direction thrust ball bearings

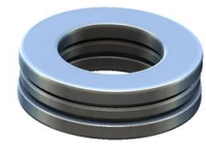

VISUAL (S)

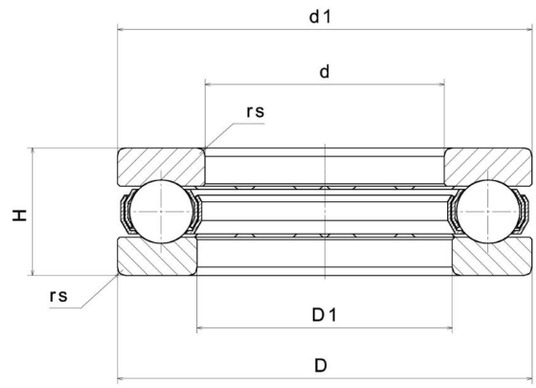

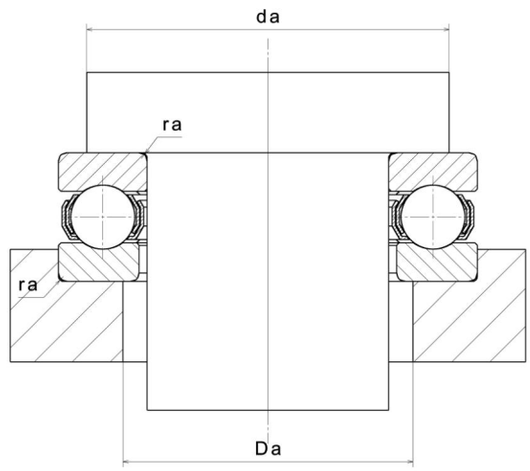

NTN Europe
1 rue des Usines · BP 2017 · 74010 Annecy Cedex · France · Tel. +33 (0)4 50 65 30 00
S.A. au capital de 322 639 919 € · RCS ANNECY B 325 821 072 · Id. Fiscale : FR 48 325 821 072
SIRET 325 821 072 00015 · Code APE 2815 Z · Code NACE 28.15

51130
One direction thrust ball bearings

PRODUCT DEFINITION	
Brand	NTN
d - Internal diameter	150 mm
D - External diameter	190 mm
T - Thrust bearing height	31 mm
rs - Min fillet radius	1 mm
Mass	2 kg

PRODUCT PERFORMANCE	
Ca - Dynamic axial load rating	109000000 mN
C0a - Static axial load rating	400000000 mN
Cua - Limit axial load rating	13900000 mN
N lim - Oil lubrication limit speed	10800 °/s
N lim - Grease lubrication limit speed	7200 °/s
Tmin - Min operating temperature	233,15 °K
Tmax - Max operating temperature	393,15 °K

ABUTMENT	
Da max - Max shoulder diameter OR	166 mm
da min - Min shoulder diameter IR	174 mm