Filter-regulators - Series MX

Product code: MX2-1/2-FR0804

Datasheet creation date: 19/05/2026 23:58

Check the most updated document online *click here*



TECHNICAL DATA

Series	MX
Size	2
PORTS (IN - OUT)	1/2 = G1/2
Filter-regulator	FR
Filtering element	0 = 25 µm with relieving (standard)
Draining of condensate	8 = direct G1/8 exhaust
Operating pressure	0 = 0.5 ÷ 10 bar (standard)
Pressure gauge	4 = with built-in pressure gauge 0-12 and working pressure 0.5 ÷ 10 bar (standard)
Flow direction	= from left to right (standard)

Products designed for industrial applications. General terms and conditions for sale are available on www.camozzi.com.
This document contains a brief description of the products offered by Camozzi Automation at time of publication.
For more complete and up to date information about the Camozzi Automation product range, please refer to our online catalogue at https://shop.camozzi.com

Filter-regulators - Series MX

Product code: MX2-1/2-FR0804

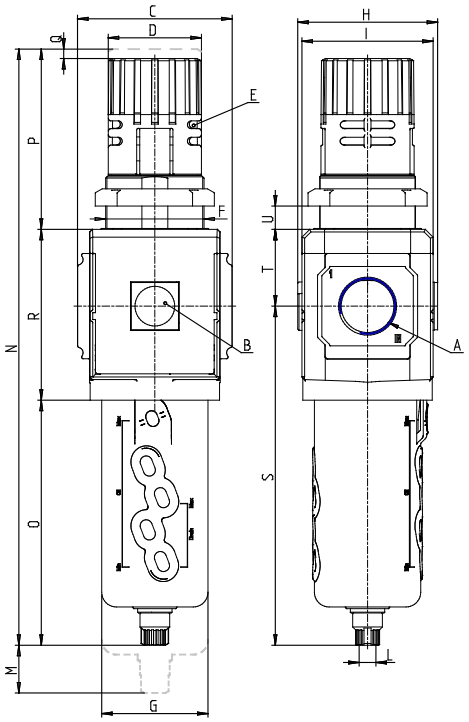

DIMENSIONS

A	G1/2
B (bar)	0-12 bar
C (mm)	70.0
D (mm)	45
E (mm)	Ø4.5
E2 (mm)	9.5
F (mm)	M47x1.5
G (mm)	55.5
H (mm)	74.5
I (mm)	68
L	G 1/8
M (mm)	80
N (mm)	290
O (mm)	127
P (mm)	78
Q (mm)	5
R (mm)	85
S (mm)	174.5
T (mm)	37.5
U (mm)	0÷16
Weight (kg)	0.8

Products designed for industrial applications. General terms and conditions for sale are available on www.camozzi.com.
This document contains a brief description of the products offered by Camozzi Automation at time of publication.
For more complete and up to date information about the Camozzi Automation product range, please refer to our online catalogue at https://shop.camozzi.com