THIS DRAWING IS UNPUBLISHED. RELEASED FOR PUBLICATION - ,- .
© COPYRIGHT - By - ALL RIGHTS RESERVED.

LOC	DIST
AA	00

REVISIONS

P	LTR	DESCRIPTION	DATE	DWN	APVD
	B1	REVISED PER ECO-11-005033	23MAR11	RK	HMR

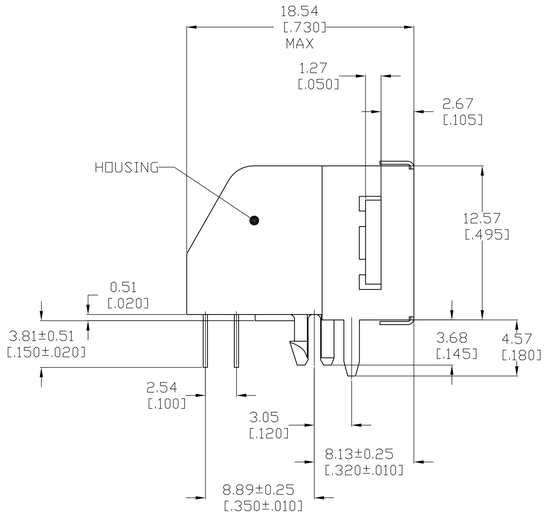

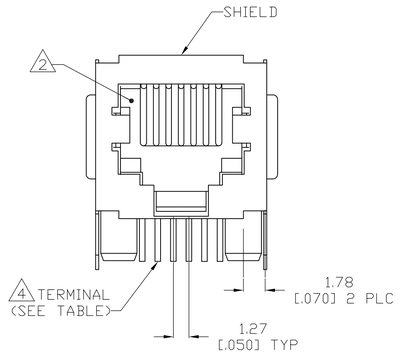

1. MATERIAL: HOUSING-PBT POLYESTER, COLOR: BLACK
TERMINAL- 0.36[.014] THICK PHOS-BRONZE PLATED
WITH 1.27μm[.000050] MINIMUM THICK HARD GOLD IN LOCALIZED
GOLD PLATE AREA AND 3.81μm[.000150] MINIMUM THICK MATTE TIN
IN SOLDER AREA OVER 1.27μm[.000050] MINIMUM THICK NICKEL
UNDERPLATE
SHIELD-0.25[.010] THICK COPPER ALLOY
PLATED WITH 3.0μm[.000120] MINIMUM REFLOWED TIN

2. CAVITY CONFORMS TO FCC RULES AND REGULATIONS
PART 68, SUBPART F.

3. DIMENSION MEASURED ALONG FRONT EDGE OF MATING FACE

4. TERMINALS FOR 5555154-2 LOCATED IN
CENTER POSITIONS.

5. BULK PACKAGED IN TRAYS.

6. PACKAGED 36 ASSEMBLIES PER TUBE.
SEE DETAIL "A".

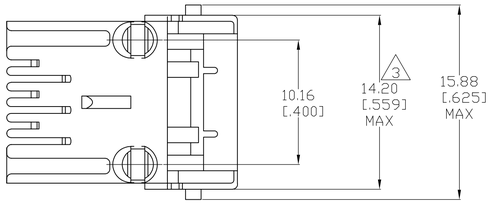

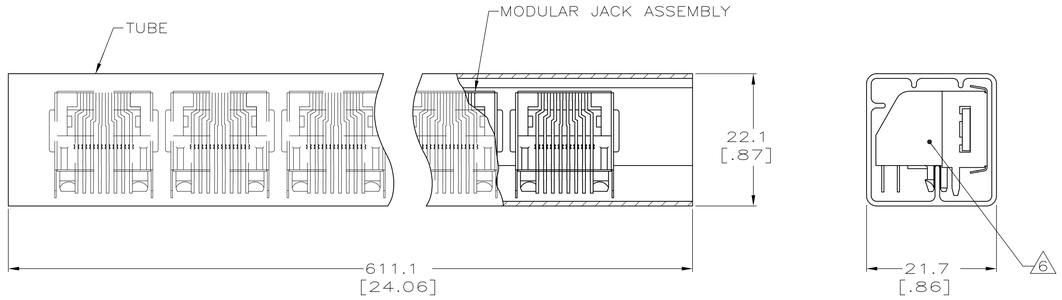

DETAIL A
SCALE 2:1

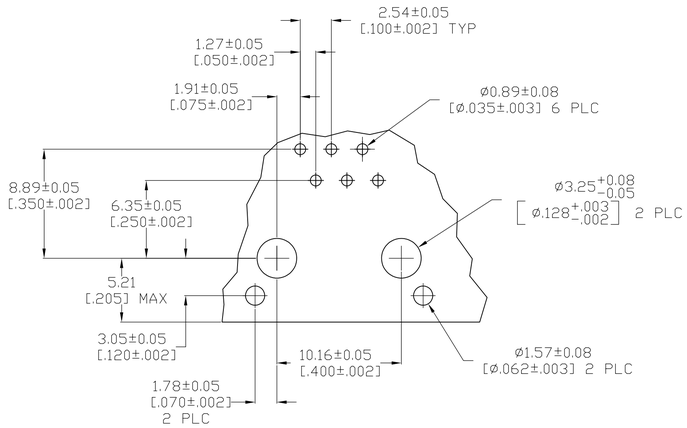

RECOMMENDED PRINTED CIRCUIT BOARD LAYOUT
(COMPONENT SIDE)

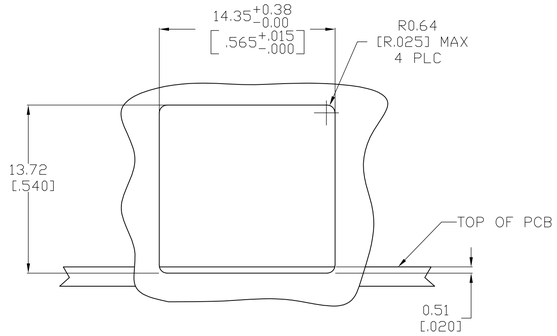

RECOMMENDED PANEL CUTOUT

PACKAGE	TERMINALS REQUIRED	PART NUMBER
6	6	5555154-4
5	4 4	5555154-2
5	6	5555154-1

THIS DRAWING IS A CONTROLLED DOCUMENT.

DIMENSIONS: mm [INCHES]

TOLERANCES UNLESS OTHERWISE SPECIFIED:
0 PLC ± -
1 PLC ± -
2 PLC ± 0.13[.005]
3 PLC ± -
4 PLC ± -
ANGLES ± -

MATERIAL: SEE NOTE 1
FINISH: SEE NOTE 1

DWN 08JUN2005 G. ATTADIA - DOCK5
CHK 08JUN2005 J. WESTMAN
APVD 08JUN2005 S. FLICKINGER
PRODUCT SPEC 108-1163
APPLICATION SPEC 114-2048
WEIGHT -

TE Connectivity

NAME: MODULAR JACK ASSEMBLY, SHIELDED, 6 POSITION, LOW PROFILE, RIGHT ANGLE, PRINTED CIRCUIT BOARD GROUND WITH PANEL STOPS

SIZE	CAGE CODE	DRAWING NO	RESTRICTED TO
A1	00779	C-5555154	-

CUSTOMER DRAWING | SCALE 4:1 | SHEET 1 OF 1 | REV B1

4805 (3/11)