# PARATHOM PAR16 35 36° 2.6 W/840 GU10

PARATHOM PAR16 | LED reflector lamps PAR16 with retrofit pin base

## Areas of application

- Spotlighting for accents
- Display cabinets and shop windows
- Retail outlets and exhibition rooms
- Spotlighting heat-sensitive objects such as food, plants, etc.
- Outdoor applications only in suitable luminaires
- Directional light sources
- Hospitality
- Shops

## Product benefits

- Excellent price/performance ratio
- Very low energy consumption
- Extremely long life
- Robust against vibrations
- No UV and near-IR radiation in the light beam
- Professional thermal management
- Efficient generation of white light
- Alternative to line-voltage halogen lamps
- Ideal for economical spotlighting

## Product features

- Professional LED lamps for line voltage
- Not dimmable
- Good color rendering ($R_a \geq 80$) and color stability throughout the life of the lamp
- Base: GU10
- Lifetime: up to 15,000 h


© 2016, LEDVANCE GmbH. All rights reserved.

- Mercury-free lamps
- High color consistency


© 2016, LEDVANCE GmbH. All rights reserved.

## Technical data

### Electrical data

| | |
|---|---|
| **Rated wattage** | 2.60 W |
| **Nominal wattage** | 2.60 W |
| **Nominal voltage** | 220...240 V |
| **Claimed equiv. conventional lamp power** | 35 W |
| **Operating frequency** | 50...60 Hz |
| **Power factor λ** | 0.55 |

### Photometrical data

| | |
|---|---|
| **Luminous intensity** | 565 cd |
| **Nominal luminous flux** | 230 lm |
| **Rated luminous flux** | 230 lm |
| **Color temperature** | 4000 K |
| **Color rendering index Ra** | ≥80 |
| **Light color (designation)** | Cool White |
| **Standard deviation of color matching** | ≤6 sdcm |
| **Nominal useful luminous flux 90°** | 230 lm |
| **Rated useful luminous flux 90°** | 230 lm |
| **Rated peak intensity** | 565 cd |

### Light technical data

| | |
|---|---|
| **Beam angle** | 36 ° |
| **Warm-up time (60 %)** | 1.00 s |
| **Starting time** | 0.0 s |
| **Nominal beam angle** | 36 ° |
| **Rated beam angle (half peak value)** | 36.00 ° |


© 2016, LEDVANCE GmbH. All rights reserved.

## Dimensions & weight

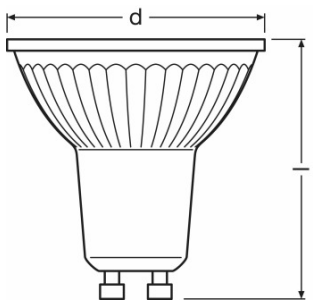


| | |
|---|---|
| **Overall length** | 55.0 mm |
| **Diameter** | 51.0 mm |
| **Outer bulb** | PAR51 |
| **Length** | 55.0 mm |
| **Maximum diameter** | 51.0 mm |

## Lifespan

| | |
|---|---|
| **Nominal lamp life time** | 15000 h |
| **Rated lamp life time** | 15000 h |
| **Number of switching cycles** | 100000 |
| **Lumen main.fact.at end of nom.life time** | 0.70 |

## Additional product data

| | |
|---|---|
| **Base (standard designation)** | GU10 |
| **Mercury content** | 0.0 mg |
| **Mercury-free** | Yes |
| **Appropriate disposal acc. to WEEE** | Yes |
| **Product remark** | All technical parameters apply to the entire lamp/Due to the complex production process for light-emitting diodes, the typical values shown for the technical LED parameters are purely statistical values that do not necessarily match the actual technical parameters of each individual product, which can vary from the typical value |

## Capabilities

| | |
|---|---|
| **Dimmable** | No |

## Certificates & standards


© 2016, LEDVANCE GmbH. All rights reserved.

| | |
|---|---|
| **Energy efficiency class** | A+ |
| **Energy consumption** | 3 kWh/1000h |

### Country specific categorizations

| | |
|---|---|
| **ILCOS** | DRPAR-2,6/840-220-240-GU10-50/36 |
| **Order reference** | PPAR163536 2,6W |

## Logistical Data

| Product code | Product description | Packaging unit (Pieces/Unit) | Dimensions (length x width x height) | Volume | Gross weight |
|---|---|---|---|---|---|
| 4052899958067 | PARATHOM PAR16 35 36° 2.6 W/840 GU10 | Shipping carton box 10 | 257 mm x 110 mm x 70 mm | 1.98 $dm^3$ | 545.00 g |

The mentioned product code describes the smallest quantity unit which can be ordered. One shipping unit can contain one or more single products. When placing an order, for the quantity please enter single or multiples of a shipping unit.

## References / Links

For further products and actual information concerning LED lamps see
- www.ledvance.com/ledlamps

For Guarantee see
- www.ledvance.com/guarantee

## Disclaimer

Subject to change without notice. Errors and omission excepted. Always make sure to use the most recent release.


© 2016, LEDVANCE GmbH. All rights reserved.