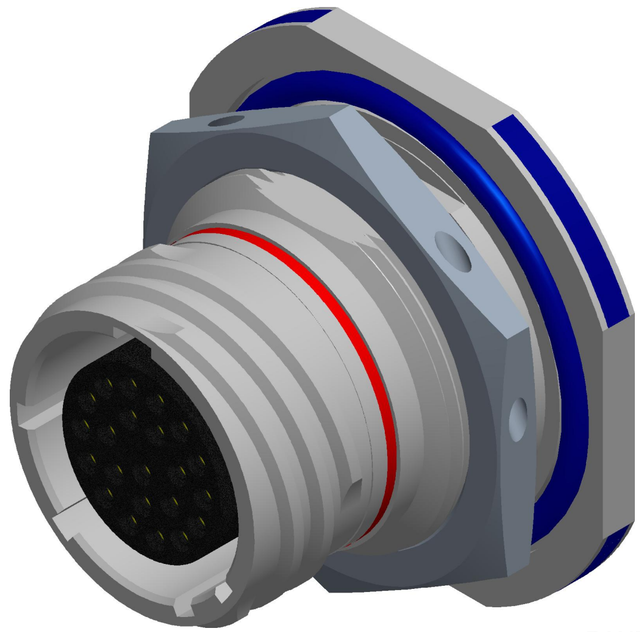

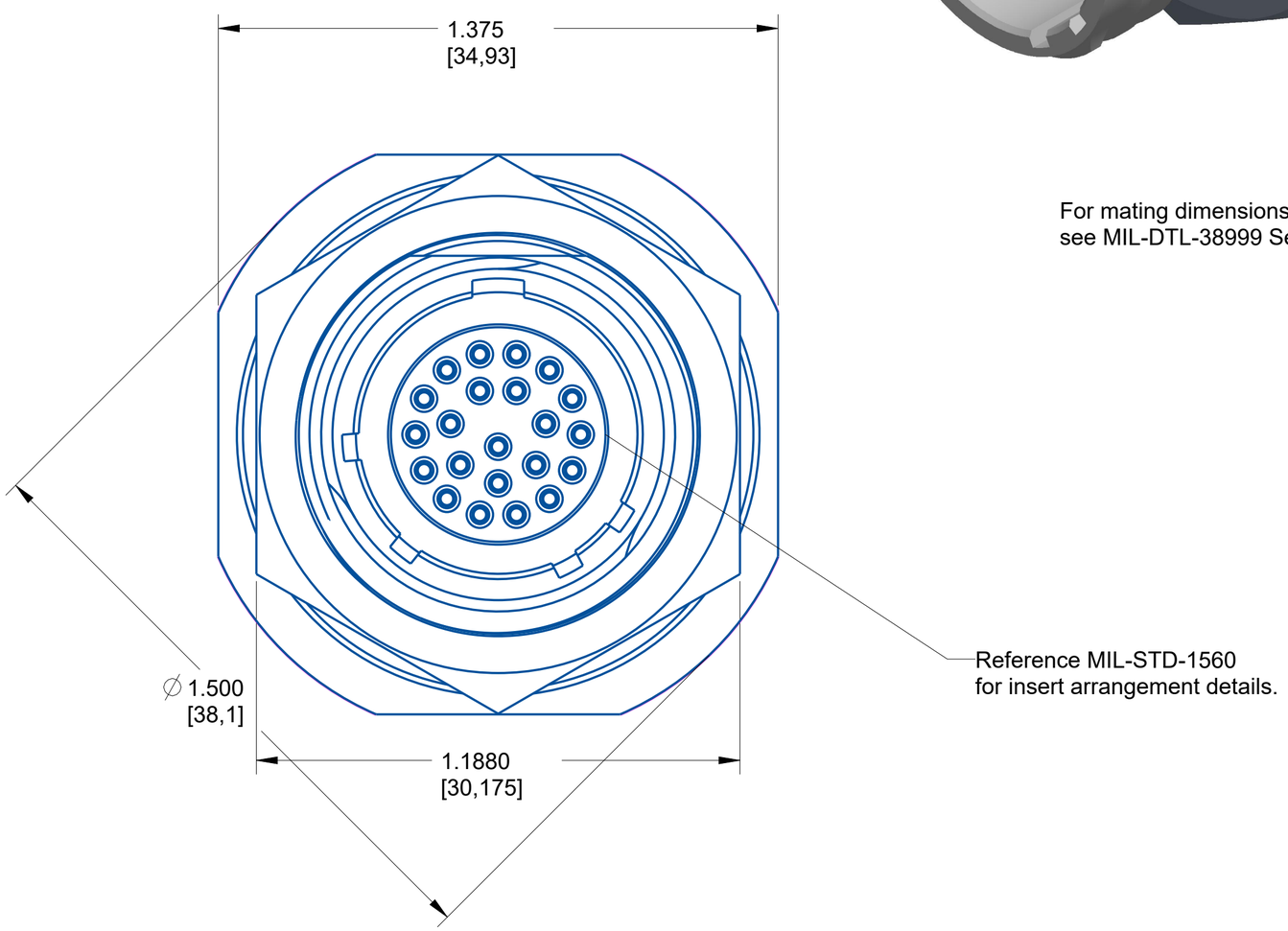

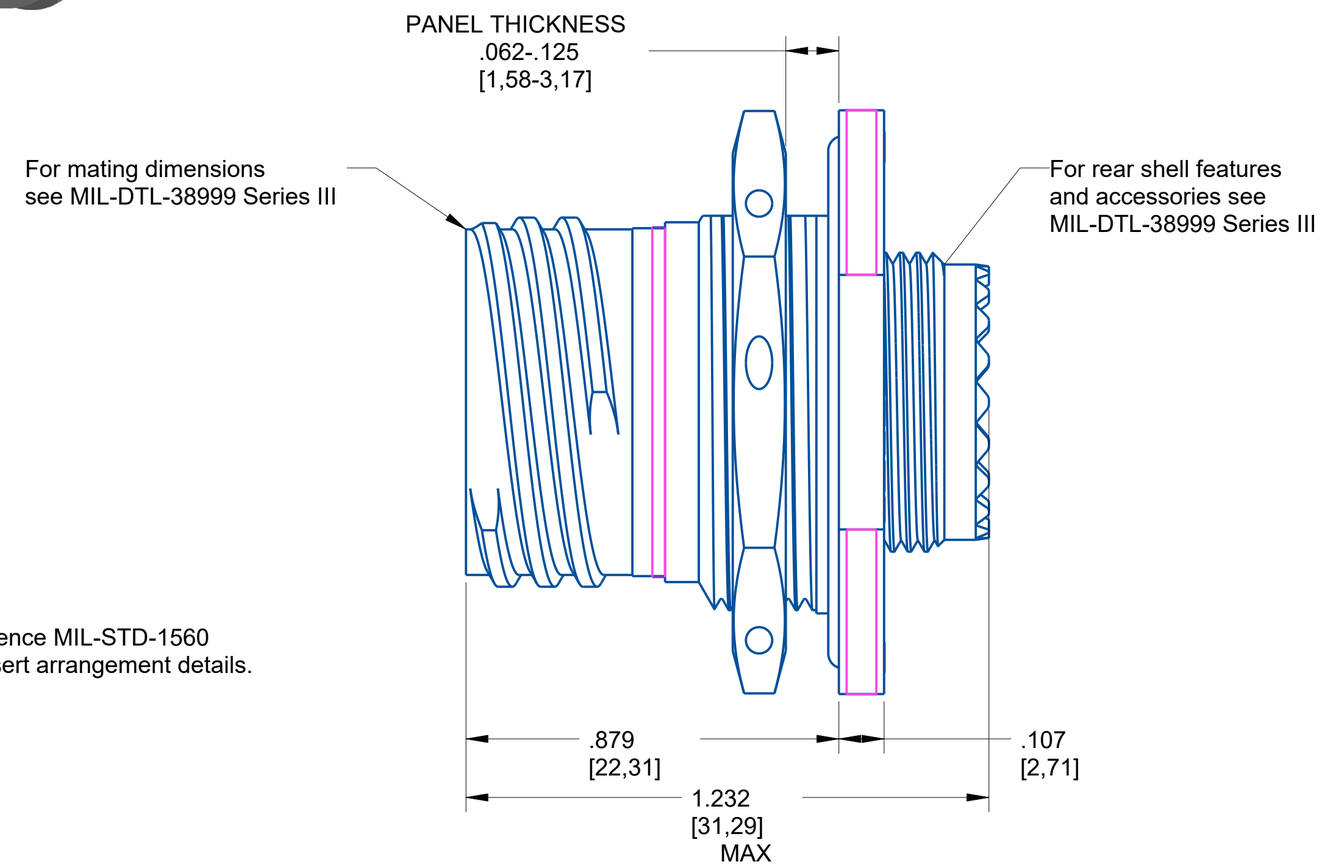

NOTE:
- -DRAWING NOT TO SCALE
- -DIMENSIONS SUBJECT TO CHANGE
- -DIMENSIONS ARE IN INCHES [MM]

PROPERTY OF AMPHENOL AEROSPACE. ALL RIGHTS RESERVED.

Meets requirements
of MIL-DTL-38999
Base Material: Composite
Plating: Electroless, Nickel

AMPHENOL CORPORATION
40-60 DELAWARE AVENUE
SIDNEY, N.Y. 13838

RECEPTACLE U
Electrical Connector
D38999/24

SIZE	CAGE CODE	CODED NUMBER	REV
C	77820	D38999/24MC35SN	P1

SHEET 1 OF 1

Insert Arrangement

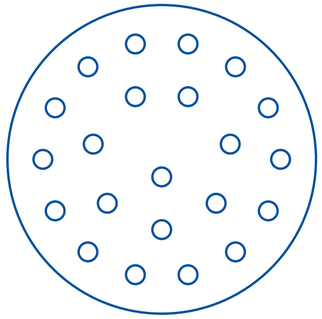

No. of Contacts	22
Contact Size	22D
Wire Size	28, 26, 24, 22

Shell Size	C
Arrangement	35
Service Rating	M
Test Current	5 AMPS

NOTE:
- -DRAWING NOT TO SCALE
- -DIMENSIONS SUBJECT TO CHANGE
- -DIMENSIONS ARE IN INCHES [MM]

PROPERTY OF AMPHENOL AEROSPACE. ALL RIGHTS RESERVED.

AMPHENOL CORPORATION
40-60 DELAWARE AVENUE
SIDNEY, N.Y. 13838

RECEPTACLE U
Electrical Connector
D38999/24

SIZE	CAGE CODE	CODED NUMBER	REV
C	77820	D38999/24MC35SN	P1

SHEET 1 OF 1

4 3 2 1