OPERATING INSTRUCTIONS

T4000 Multi

Safety switch

SICK
Sensor Intelligence.

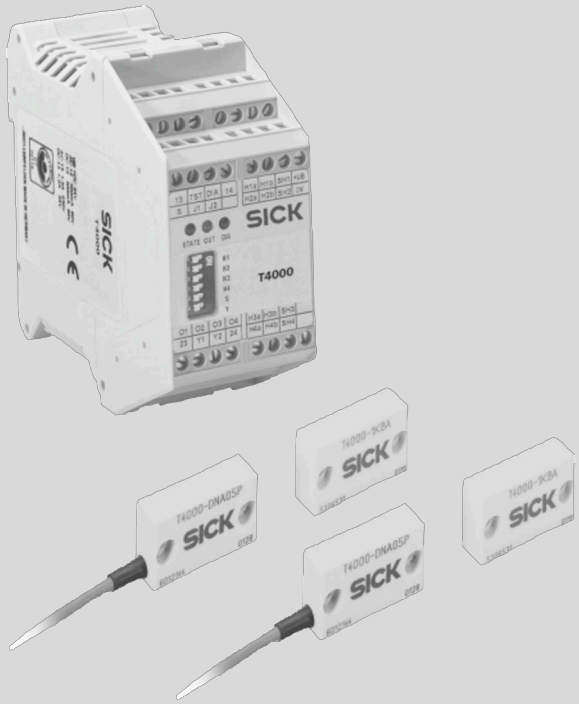

Described product

T4000 Multi

Manufacturer

SICK AG
Erwin-Sick-Str. 1
79183 Waldkirch
Germany

Legal information

This work is protected by copyright. Any rights derived from the copyright shall be reserved for SICK AG. Reproduction of this document or parts of this document is only permissible within the limits of the legal determination of Copyright Law. Any modification, abridgment or translation of this document is prohibited without the express written permission of SICK AG.

The trademarks stated in this document are the property of their respective owner.

© SICK AG. All rights reserved.

Original document

This document is an original document of SICK AG.

Contents

1 About this document 5
1.1 Function of this document 5
1.2 Scope 5
1.3 Target groups of these operating instructions 5
1.4 Further information 5
1.5 Symbols and document conventions 5

2 Safety information 7
2.1 General safety notes 7
2.2 Intended use 7
2.3 Requirements for the qualification of personnel 7

3 Product description 9
3.1 Structure and function 9
3.2 Product characteristics 10

4 Project planning 11
4.1 Manufacturer of the machine 11
4.2 Operating entity of the machine 11
4.3 Design 11
4.4 Integration into the electrical control 12
4.5 Thorough check concept 16

5 Mounting 17
5.1 Safety 17
5.2 Unpacking 17
5.3 Mounting 17
5.4 Changing the approach direction 19

6 Electrical installation 22
6.1 Safety 22
6.2 Failsafety 22
6.3 Notes on cULus 23
6.4 Device connection M12×8 23
6.5 Requirements for the connecting cables 24

7 Commissioning 25
7.1 Safety 25
7.2 Switching on 25
7.3 Teach-in 25
7.4 Thorough check 26

8 Troubleshooting 28
8.1 Safety 28
8.2 LED status indicators 28

8.3 System status ... 29

9 Maintenance ... 30
9.1 Safety ... 30
9.2 Cleaning ... 30
9.3 Regular thorough check ... 30
9.4 Thorough check of the safety function ... 30

10 Decommissioning ... 32
10.1 Disposal ... 32

11 Technical data ... 33
11.1 Sensor T4000-2DRNAC ... 33
11.2 T4000-1KBA actuator ... 34
11.3 T4000-1KBQ actuator ... 35
11.4 Dimensional drawings ... 37

12 Ordering information ... 39
12.1 Devices ... 39
12.2 Accessories ... 39

13 Annex ... 40
13.1 Conformities and certificates ... 40

14 List of figures ... 41

15 List of tables ... 42

1 About this document

1.1 Function of this document

These operating instructions contain the information needed during the life cycle of the safety switch.

They must be made available to all people who work with the safety switch.

1.2 Scope

These operating instructions apply only to the T4000 Compact transponder safety switches as from the date of manufacture:

- 1007xxxx

You will find the date of manufacture of the device in the field Date Code on the type label in the format yywwxxxx (yy = year, ww = calendar week, xxxx = serial number).

1.3 Target groups of these operating instructions

Some chapters of these operating instructions are intended for certain target groups. However, the entire operating instructions are relevant for intended use of the product.

Table 1: Target groups and selected chapters of these operating instructions

Target group	Chapters of these operating instructions
Project developers (planners, developers, designers)	"Project planning", page 11 "Technical data", page 33
Installers	"Mounting", page 17
Electricians	"Electrical installation", page 22
Safety experts (such as CE authorized representatives, compliance officers, people who test and approve the application)	"Project planning", page 11 "Commissioning", page 25 "Technical data", page 33
Operators	"Troubleshooting", page 28
Maintenance personnel	"Maintenance", page 30 "Troubleshooting", page 28

1.4 Further information

www.sick.com

The following information is available via the Internet:

- This document in other languages
- CAD data for drawings and dimensional drawings
- Certificates (such as the EU declaration of conformity)
- Guide for Safe Machinery Six steps to a safe machine

1.5 Symbols and document conventions

The following symbols and conventions are used in this document:

Safety notes and other notes

DANGER
Indicates a situation presenting imminent danger, which will lead to death or serious injuries if not prevented.

WARNING
Indicates a situation presenting possible danger, which may lead to death or serious injuries if not prevented.

CAUTION
Indicates a situation presenting possible danger, which may lead to moderate or minor injuries if not prevented.

NOTICE
Indicates a situation presenting possible danger, which may lead to property damage if not prevented.

NOTE
Indicates useful tips and recommendations.

Instructions to action

► The arrow denotes instructions to action.

1. The sequence of instructions for action is numbered.
2. Follow the order in which the numbered instructions are given.

✓ The check mark denotes the result of an instruction.

LED symbols

These symbols indicate the status of an LED:

○ The LED is off.
The LED is flashing.
● The LED is illuminated continuously.

Terminology

Dangerous state

A dangerous state is a status of the machine or facility, where people may be injured. Protective devices prevent this risk if the machine is operated within its intended use.

The figures in this document always show the dangerous state of the machine as movement of a machine part. In practice, there are different dangerous states, such as:

- Machine movements
- Electrical parts
- Visible and invisible beam
- A combination of multiple hazards

2 Safety information

2.1 General safety notes

This chapter contains general safety information about the safety switch.

Further information about specific product use situations can be found in the relevant chapters.

DANGER
Hazard due to lack of effectiveness of the protective device

In the case of non-compliance, it is possible that the dangerous state of the machine may not be stopped or not stopped in a timely manner.

- ► Please read this document carefully and make sure that you understand the content fully before working with the device.
- ► Follow all safety notes in this document.

2.2 Intended use

NOTICE
The user is responsible for ensuring that the device is correctly incorporated into a safe overall system. This involves validating the overall system according to specifications such as those defined in ISO 13849-2 or EN 62061.

The T4000 Compact transponder safety switch is switched by a non-contact actuator and is suitable for the following applications:

- Movable physical guards
- Safe position monitoring

The safety switch must be used only on the machine on which it was planned, mounted, installed and initially commissioned by qualified safety personnel in accordance with these operating instructions.

Incorrect use, improper modification or manipulation of the safety switch will invalidate any warranty from SICK; in addition, any responsibility and liability of SICK for damage and secondary damage caused by this is excluded.

The safety switch is **not** suitable for the ambient conditions such as, but not limited, to the following:

- Radioactivity (exception: natural radioactivity)
- Vacuum or high pressure
- High UV load
- In the vicinity of low-frequency RFID devices
- In the vicinity of magnetic fields

The following may impair the function of the safety switch:

- Metal subsurface or metal in direct proximity
- Passing metal chips

2.3 Requirements for the qualification of personnel

The safety switch must be planned in, mounted, connected, commissioned, and serviced by qualified safety personnel only.

Project planning

For project planning, a person is considered competent when he/she has expertise and experience in the selection and use of protective devices on machines and is familiar with the relevant technical rules and national work safety regulations.

Mechanical mounting, electrical installation, and commissioning

For the task, a person is considered qualified when he/she has the expertise and experience in the relevant field and is sufficiently familiar with the application of the protective device on the machine to be able to assess whether it is in an operationally safe state.

Operation and maintenance

For operation and maintenance, a person is considered competent when he/she has the expertise and experience in the relevant field and is sufficiently familiar with the application of the protective device on the machine and has been instructed by the machine operator in its operation.

3 Product description

3.1 Structure and function

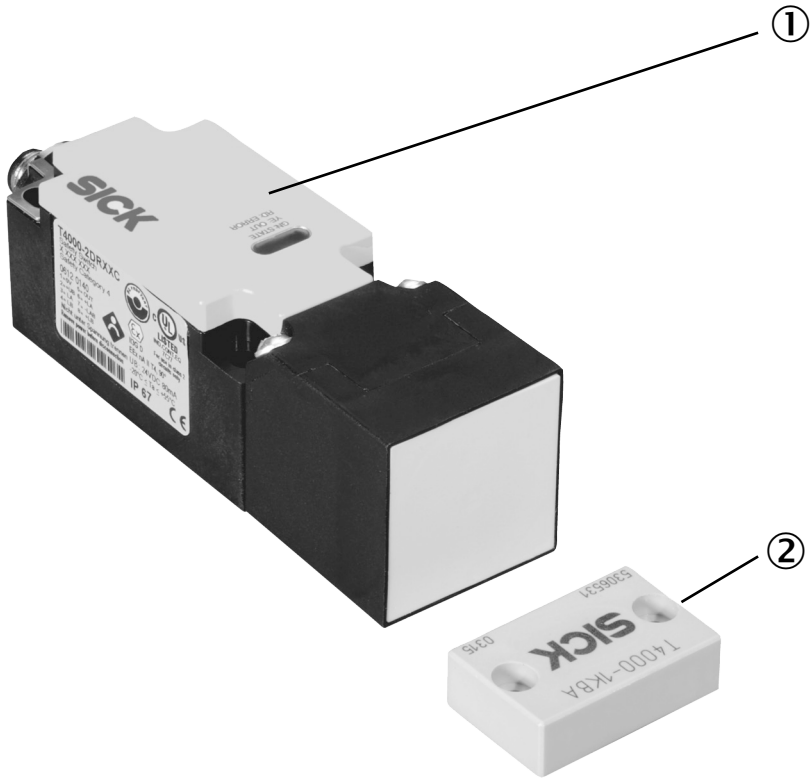

Figure 1: Components of the T4000 Compact transponder safety switch

① Sensor

② Actuator (transponder)

The T4000 Compact transponder safety switch consists of two components:

- **Sensor**
  The sensor is mounted on the fixed part of the guard and is connected to the system or machine control.
- **Actuator (transponder)**
  The actuator is mounted on the movable part of the guard.
  Each actuator has a unique electronic code.

An actuator must be taught in at the sensor during commissioning. It is possible to teach in up to 8 actuators in succession. Only the most recently taught-in actuator is valid.

Operating principle

The T4000 Compact transponder safety switch monitors movable physical guards in conjunction with the corresponding machine and system control:

- Operation of the machine in automatic mode is possible only if the guard is closed.
- A stop command is triggered if the guard is opened while the machine is running.

The control must meet the following requirements for this:

- Switch-on commands that result in a dangerous state may only be activated when the guard is in protective position.
- The dangerous state must be ended before the guard is moved from the protective position.

The actuator mounted on the movable part of the guard approaches the sensor when the guard is closed.

The sensor reads the actuator code and checks its validity accordance with the coding. If the code is valid, the sensor enables the safety outputs and the application diagnostic output OUT is set to HIGH.

When the guard is opened, the safety outputs switch off the safety circuit and the application diagnostic output is switched LOW.

3.2 Product characteristics

3.2.1 Product variants

The safety switch is delivered in different variants. You will find an overview of important distinguishing features of the variants in the following.

Sensor

- Sensor with unique coding

Actuator

- Cuboid
- Square

Complete overview of all variants: see "Ordering information", page 39.

3.2.2 Sensing face

The sensor has a sensing face, see "Dimensional drawings", page 37.

The sensing face is marked yellow. It can be adjusted in five directions, see "Changing the approach direction", page 19.

The center point of the sensing face also corresponds to the center point of the sensor.

3.2.3 Fault detection

Any faults that occur, including internal device faults, are detected at the latest with the next request to close the safe contacts (e.g. at the machine start). The safety switch then switches to safe state.

If a fault is detected, the safety circuit is switched off and the LED ERROR lights up red.

In most cases, a fault can be reset by opening and closing the guard for at least 2 seconds in each case.

If the fault is still displayed after this, carry out a hardware reset or briefly disconnect the device from the voltage supply.

Contact the manufacturer if the fault also cannot be reset by restarting the device.

3.2.4 Status indicators

The LEDs STATE (green) and OUT/ERROR (yellow/red) indicate the operational status of the safety switch.

Overview of the LED statuses and their meanings: see "LED status indicators", page 28.

4 Project planning

4.1 Manufacturer of the machine

DANGER
Failure to comply with manufacturer's obligations

Hazard due to lack of effectiveness of the protective device

- ► Carry out a risk assessment before using the safety switch.
- ► Do not tamper with, open, or modify the components of the safety switch.
- ► Do not repair defective devices – they must be replaced instead.
- ► Make sure that switch-on commands which bring about a dangerous state of the machine are not enabled until the protective device is closed.
- ► Make sure that a stop command is triggered when the protective device is opened during the dangerous machine state.
- ► The safety switches must not be defeated (contacts jumpered), rotated away, removed, or rendered ineffective in any other way. If necessary, put measures in place to reduce possibilities for defeat.

4.2 Operating entity of the machine

DANGER
Failure to comply with operating entity's obligations

Hazard due to lack of effectiveness of the protective device

- ► Modifications to the machine and modifications to the mechanical mounting of the safety switch necessitate a new risk assessment. The results of this risk assessment may require the operating entity of the machine to fulfill the manufacturer's obligations.
- ► Apart from during the procedures described in this document, the components of the safety switch must not be opened or modified.
- ► Do not perform repair work on the components. Improper repair of the safety switch can lead to a loss of the protective function.
- ► Ensure that there is no bypassing by replacement actuators. Restrict access to actuators.

4.3 Design

DANGER
Bypassing the protective device

Hazard due to lack of effectiveness of the protective device

1. Avoid incentives to manipulate the safety switch by means of the following measure:
   - Use permanent mounting methods for actuators (e.g. welding, adhesive bonding, safety screws or rivets).
2. Observe the design requirements in accordance with ISO 14119 for mounting:
   - Reduction of bypass possibilities of an interlocking device
   - Mounting of safety switch and actuator

Mounting location

If the mounting location is not specified by the machine documentation, it must be chosen carefully, see "Mounting", page 17.

Distance

If several safety switches are mounted on the machine, they must be mounted at a minimum distance to one another see "Mounting", page 17.

Alignment

The sensor and actuator must be mounted so that their sensing faces are directly aligned facing each other, see "Dimensional drawings", page 37.

Actuating direction

The actuator must approach the sensing face of the sensor when the guard is closed.

4.4 Integration into the electrical control

Switch-on commands that put the machine in a dangerous state may only be activated when the protective device is closed. When the machine goes into a dangerous state, a stop command must be triggered if the protective device is opened. Depending on the safety concept, the signal is analyzed by safety relays or a safety controller, for example.

The control that is connected and all devices responsible for safety must comply with the required performance level and the required category (for example, according to ISO 13849-1).

4.4.1 Safety outputs

The T4000 Compact transponder safety switch can be directly integrated into the machine controller.

DANGER

Hazard due to lack of effectiveness of the protective device

In the case of non-compliance, it is possible that the dangerous state of the machine may not be stopped or not stopped in a timely manner.

► Make sure that the following control and electrical requirements are met so the protective function can be fulfilled.

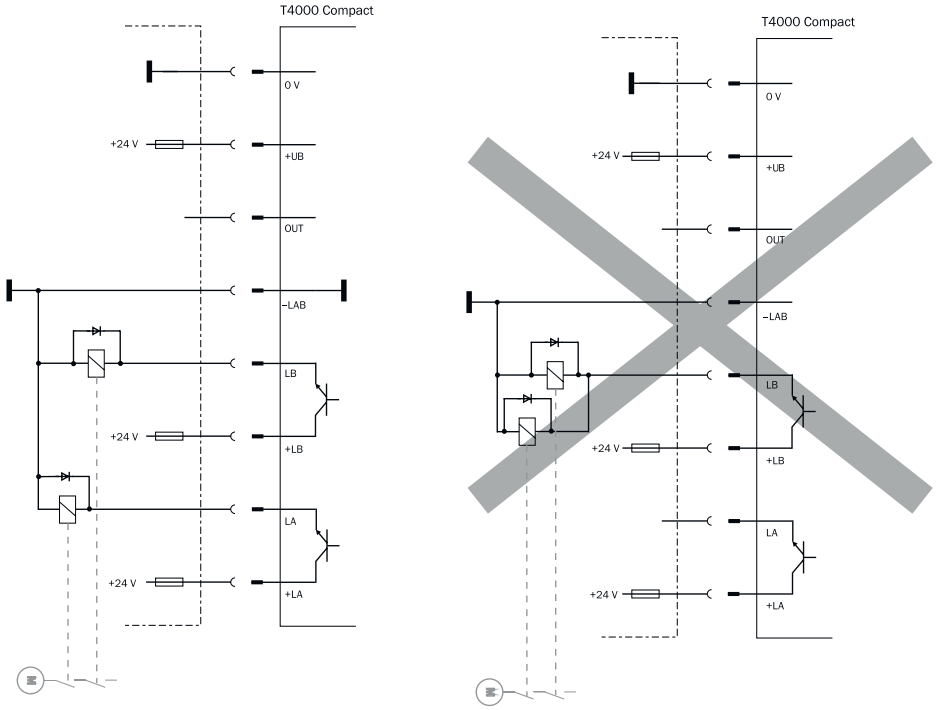

Figure 2: Dual-channel and isolated connection of the safety outputs

- The output signals of the safety outputs must not be connected to each other.
- The two signals must be processed separately in the machine controller.
- The machine must switch to the safe state at any time if at least one safety output switches to the OFF state.
- The T4000 Compact transponder safety switch is not suitable for safety relays that realize cross-circuit monitoring with different potentials (0 V/24 V).
- The inputs of a connected evaluation device must be positive-switching inputs because the two outputs of the safety switch supply a level of +24 V in switched-on state.
- The voltage supply of the safety circuits +LA and +LB must be protected with a fuse (0.4 A medium time-lag) in each case.
- The voltage +LA/+LB must correspond to the specifications in the technical data.
- Route the connecting cables with suitable protection to prevent the risk of cross-circuits.
- Monitoring of the series-connected contactors is necessary in order to realize category 3 in accordance with ISO 13849-1.

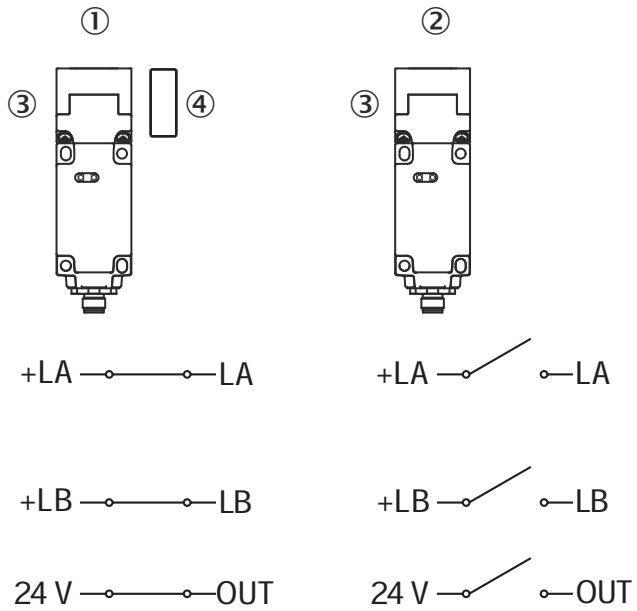

Figure 3: Switching behavior

① Closed (actuator detected)
② Open (actuator in response range)
③ Sensor
④ Actuator

DANGER
Hazard due to lack of effectiveness of the protective device

In the case of non-compliance, it is possible that the dangerous state of the machine may not be stopped or not stopped in a timely manner.

Downstream contactors must be positively guided and monitored depending on applicable national regulations or required reliability of the safety function.

► Make sure that downstream contactors are monitored (external device monitoring, EDM).

4.4.2 Application diagnostic output

DANGER
Hazard due to lack of effectiveness of the protective device

The dangerous state may not be stopped in the event of non-compliance.

Application diagnostic outputs must not be used as safety outputs.

The signal of the application diagnostic output changes as soon as the actuator is moved into or leaves the response range of the safety switch. In other words, the output signal changes when the guard is opened and closed.

Table 2: Switching behavior of application diagnostic output

Actuator	Application diagnostic output
Actuator not in response range or safety switch has fault status	OFF
Actuator in response range	ON

4.4.3 Connection example

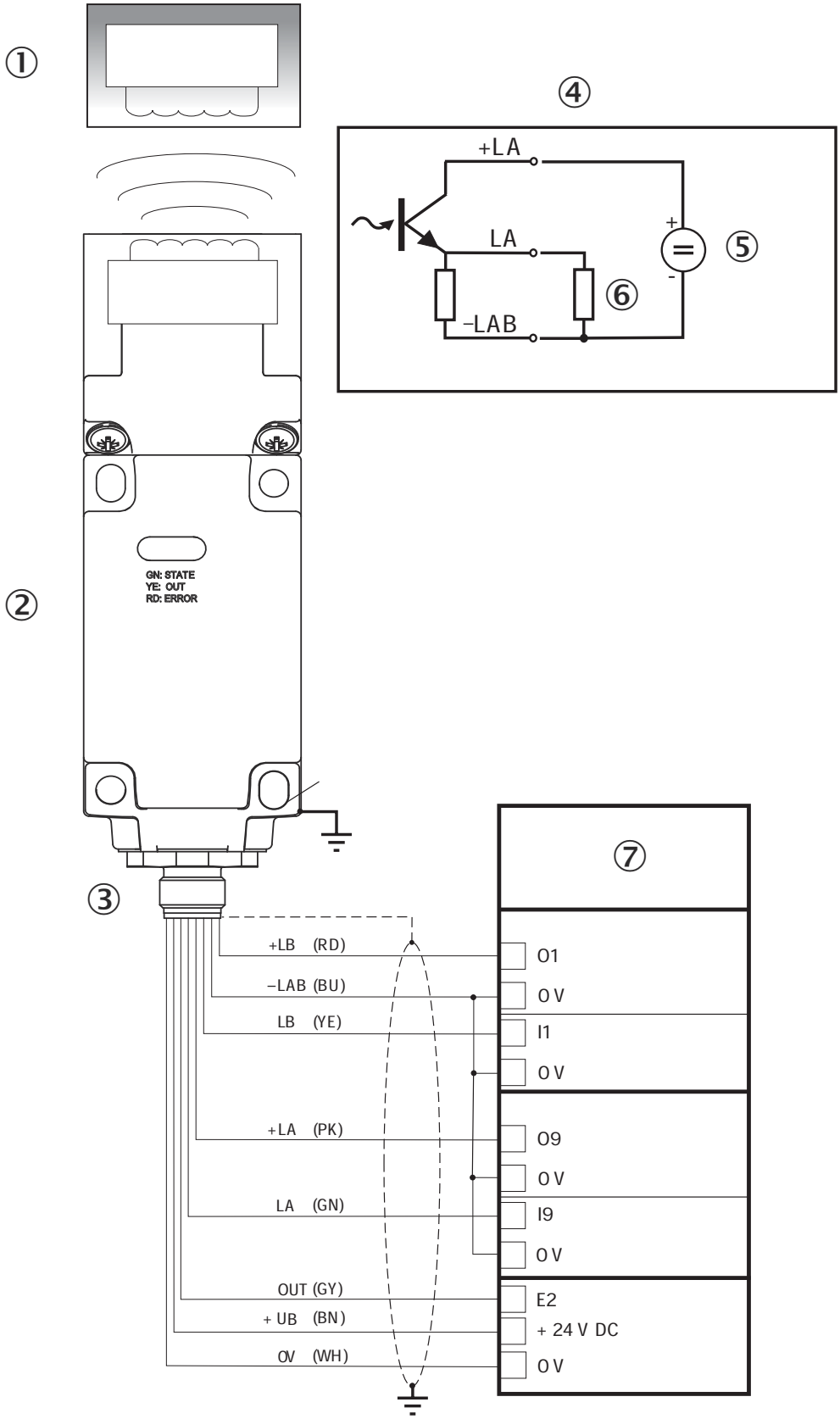

Figure 4: Connection example

① Actuator

② Sensor
③ T4000 Compact connection
④ Fail-safe programmable logic controller (FPLC)
⑤ Output circuit of the safety output A
⑥ Load
⑦ Voltage supply for load

Table 3: Connection example for T4000 Compact connection to FPLC

T4000 Compact pin	Wire color[1]	Signal	FPLC connection
1	White	0 V	Ground 0 V
2	Brown	+UB	24 V DC
3	Green	LA	Safety capable input
4	Yellow	LB	Safety capable input
5	Gray	OUT	Input
6	Pink	+LA	Clocked output
7	Blue	–LAB	Ground 0 V
8	Red	+LB	Clocked output

[1] Applies to the extension cables recommended as accessories.

4.5 Thorough check concept

The safety switch must be tested by appropriately qualified safety personnel during commissioning, after modifications, and at regular intervals; see "Thorough check", page 26.

Regular thorough checks serve to investigate the effectiveness of the safety switch and discover defects resulting from modifications or external influences (such as damage or manipulation).

The manufacturer and operating entity must define the type and frequency of the thorough checks on the machine on the basis of the application conditions and the risk assessment. The process of defining the thorough checks must be documented in a traceable manner.

4.5.1 Minimum requirements for the regular thorough check

The following thorough checks must be carried out at least once a year:

- Thorough check of the protective function of the safety switch (see "Thorough check of the safety function", page 30)
- Thorough check of secure mounting of the devices and connections
- Thorough check of the housing, cables and plug connectors for damage
- Thorough check for contamination
- Thorough check of assured switch-off distance S_{ar}
- Thorough check of the safety switch for signs of misuse or manipulation

5 Mounting

5.1 Safety

DANGER
Hazard due to unexpected starting of the machine

Death or severe injury

- ► Make sure that the dangerous state of the machine is and remains switched off.

DANGER
Bypassing the protective device

Hazard due to lack of effectiveness of the protective device

1. Avoid incentives to manipulate the safety switch by means of the following measure:
   - Use permanent mounting methods for actuators (e.g. welding, adhesive bonding, safety screws or rivets).
2. Observe the design requirements in accordance with ISO 14119 for mounting:
   - Reduction of bypass possibilities of an interlocking device
   - Mounting of safety switch and actuator

NOTICE
Incorrect mounting and unsuitable ambient conditions may damage the safety switch.

- ► Arrange the sensor and actuator in a way that prevents damage from foreseeable external influences.
- ► Do not use the sensor and actuator as a stop.
- ► The holder and mounting method for the sensor and actuator must be stable enough to ensure that correct operation can take place.
- ► Always use reliable mounting elements that can only be removed using tools.
- ► If misalignment results in an opening on the physical guard, this must not impair the protection that is provided.

5.2 Unpacking

- ► Check the components to ensure that all parts are complete and undamaged.
- ► Please contact your respective SICK subsidiary should you have any complaints.

5.3 Mounting

Selecting the mounting location

CAUTION
Bypassing the safety switch in a simple way or unintentional actuation must be prevented by suitable installation measures in accordance with ISO 14119.

If the mounting location is not specified by the machine documentation, it must be chosen carefully.

- Select the mounting location so that the sensor and actuator are accessible for maintenance work and are protected against damage.
- Mount the sensor and actuator on a non-ferrous surface and at a distance from metal parts if possible in order to avoid influencing the sensing range. If this is not possible, the influence on the assured switch-on distance S_{ao} and the assured switch-off distance S_{ar} must be checked.
- When the guard is closed, the sensor and actuator must be located opposite each other in the assured switch-on distance 0.8 × S_{ao} or closer. A minimum distance must be observed between the actuator and sensor if the approach direction is from the side (see "Technical data", page 33).
- The switching operation must be triggered only by the actuator specifically intended for this.
- Make sure that all dangerous states are excluded when the guard is opened, even if the actuator has not yet reached the assured switch-off distance S_{ar}.

NOTE
At the assured switch-off distance S_{ar}, the safety outputs are reliably switched off even in the event of an internal component failure.

- The sensor and actuator must not be used as a mechanical stop. If necessary, fit an additional stop for the movable physical guard.

Mounting the sensor

- Mount the sensor on the fixed part of the guard.
- Tightening torque of the fixing screws: 1 Nm

Mounting the actuator

- Align the actuator to the sensor.
- Actuators must be positively mounted on the movable part of the guard, e.g. using the supplied safety screws.
- Tightening torque: 1 Nm
- It must not be possible to remove or manipulate actuators by simple means.

NOTE
When the actuator is installed flush, the sensing range changes based on the installation depth and the material of the guard.

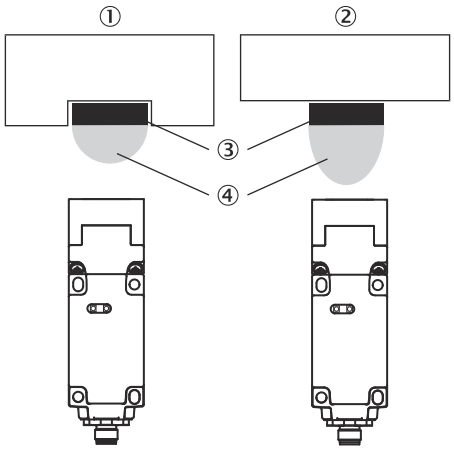

Figure 5: Change in sensing range when installed flush

① Flush installation
② Non-flush installation
③ Actuator
④ Response range

Mounting several safety switches

► When several safety switches are mounted, the prescribed minimum distance of 40 mm between the individual sensors must be observed in order to avoid mutual interference.

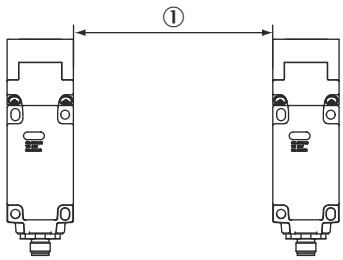

Figure 6: Minimum distance when several safety switches are mounted

① Minimum distance = 40 mm

5.4 Changing the approach direction

The sensing face of the sensor can be adjusted in five directions.

CAUTION
When changing the approach direction, make sure that no cables are damaged, trapped or torn off.

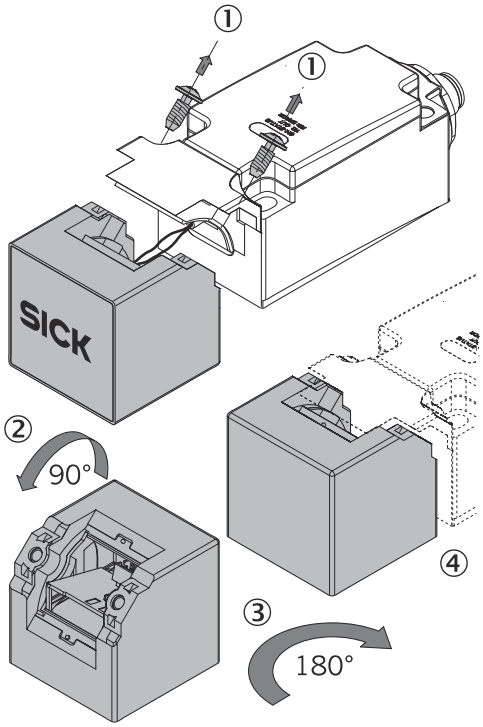

Figure 7: Changing the approach direction

1. Unscrew the screws of the mounting bracket and pull the mounting bracket off the sensor (①).
2. Tilt the sensor forward by 90°. The sensing face is now facing downwards (②).
3. Turn the sensor by 180° (③).
4. Screw on the mounting bracket again with a tightening torque of 0.6 Nm (④).

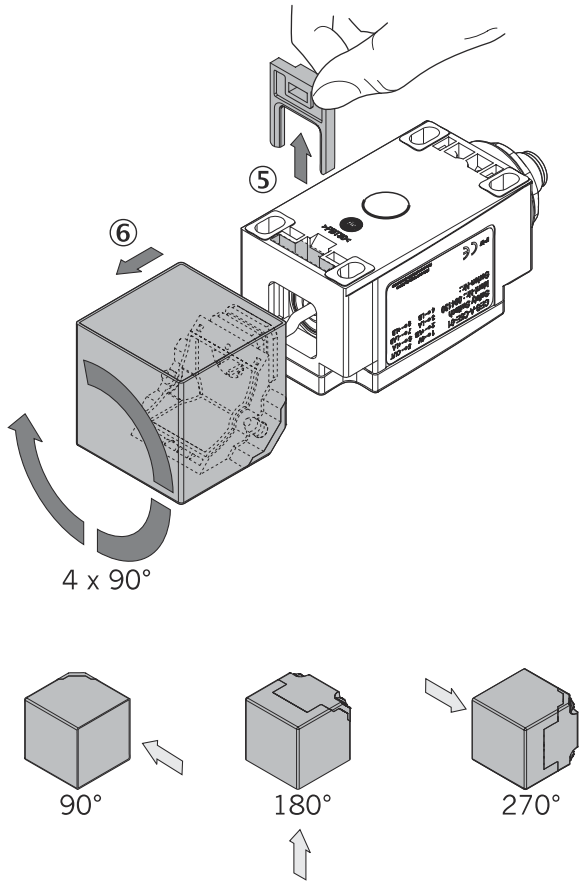

Figure 8: Changing the approach direction

5. Remove the clamping wedge on the underside of the housing (⑤).
6. Pull the read head from the housing and turn it to the desired approach direction in 90° steps (⑥).

6 Electrical installation

6.1 Safety

DANGER
Hazard due to electrical voltage

Hazard due to unexpected starting of the machine

- ► Make sure that the machine is and remains disconnected from the power supply during the electrical installation.
- ► Make sure that the dangerous state of the machine is and remains switched off during electrical installation.
- ► Make sure that the outputs of the safety switch have no effect on the machine during electrical installation.

DANGER
Incorrect safety switch connection

Loss of safety function

- ► When using insulation material or stranded connection wires, make sure they demonstrate the required temperature resistance and mechanical load capability.
- ► Use only safe contacts for safety functions.

DANGER
Hazard due to lack of effectiveness of the protective device

The dangerous state may not be stopped in the event of non-compliance.

Application diagnostic outputs must not be used as safety outputs.

- ► All electrical connections must be isolated from the mains supply either by safety transformers (EN 61558-2-6) or equivalent isolation measures.
- ► All output contacts must have an adequate suppressor circuit for inductive loads. For this purpose, the outputs must be protected with a suitable suppressor (e.g. freewheeling diodes, varistors, RC elements).
- ► Power devices that represent a strong source of interference must be locally isolated from the input and output circuits for signal processing. The cable routing of the safety circuits should be separated from the cables of the power circuits by the greatest possible distance.
- ► In order to avoid EMC disturbances, the physical ambient and operating conditions at the installation location of the device must comply with the requirements of EN 60204-1 (EMC).
- ► Pay attention to any interference fields for devices such as frequency converters or induction heating systems.
- ► Observe the EMC information in the manuals from the respective manufacturer.

6.2 Failsafety

- If the device does not respond when the supply voltage is connected (e.g. green LED STATE does not flash), the safety switch must be returned to the manufacturer unopened.
- The supply voltage U_B is reverse polarity protected.
- The safety outputs LA/LB are short-circuit protected but are not reverse polarity protected.
- A cross-circuit between LA and LB can be detected only by external clocking.

- A cross-circuit in the cable can be excluded by protected cable routing.
- The device also complies with the necessary EMC regulations with unshielded connecting cable. A shielded cable can be connected at the shield spring fields of application that are particularly interference-sensitive. This can be connected to machine ground as an electrically conductive connection via the fixing screws. The shield of the free cable end must also be connected to machine ground by an electrically conductive connection.

6.3 Notes on cULus

For use according to the requirements of UL 508, the following conditions must be met:

- The voltage supply must correspond to Class 2 in accordance with UL 508:
  - Galvanically isolated power supply unit with a maximum open-circuit voltage of 30 V DC and a limited current of max. 8 A
  - Galvanically isolated power supply unit in combination with a fuse in accordance with UL 248. This fuse should be rated for max. 3.3 A and be integrated in the 30 V DC voltage section.
- Connecting cable in accordance with UL Category Code CYJV2 or CYJV

6.4 Device connection M12×8

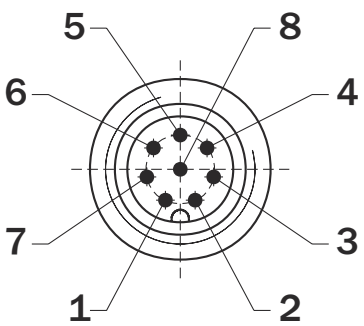

Figure 9: Device connection (male connector M12×8)

Table 4: Device connection pin assignment (male connector M12x8)

Pin	Wire color [1]	Designation	Description
1	White	0 V	Ground, 0 V DC
2	Brown	UB	Voltage supply 24 V DC
3	Green	LA	Safety output A
4	Yellow	LB	Safety output B
5	Gray	OUT	Application diagnostic output
6	Pink	+LA	Enable input, channel A
7	Blue	–LA/LB	Ground, 0 V DC for LA and LB
8	Red	+LB	Enable input, channel B

[1] Applies to the extension cables recommended as accessories.

NOTE
The connecting cable shield is internally connected with the shield spring of the device via the knurled nut of the M12 plug connector.

► Pay attention to seal tightness of the plug connector.

6.5 Requirements for the connecting cables

DANGER
Improper installation or manipulation
Danger of malfunctions or device damage due to incorrect connecting cables

► Use connection components and connecting cables from SICK AG where possible.

Table 5: Voltage drop depending on switching current and cable length

Switching current [mA]	Cable length [m]	Voltage drop, output [V]	Maximum voltage drop of cable [V]	Maximum total voltage drop [V]
6 (e.g. safety controller with clocked signals)	1 ... 100	1.4	0.1	1.5
	101 ... 300	1.4	0.4	1.8
50 (e.g. safety relay)	1 ... 15	1.5	0.2	1.7
	16 ... 50	1.5	0.5	2.0
	51 ... 100	1.5	1.0	2.5
	101 ... 300	1.5	3.0	4.5
400 (e.g. miniature contactor)	1 ... 15	1.7	1.2	2.9
	16 ... 50	1.7	4.0	5.7
	51 ... 100	1.7	8.0	9.7
	101 ... 300	1.7	–	–

7 Commissioning

7.1 Safety

DANGER
Hazard due to lack of effectiveness of the protective device

In the case of non-compliance, it is possible that the dangerous state of the machine may not be stopped or not stopped in a timely manner.

1. Before commissioning the machine, have it checked and released by qualified safety personnel.
2. Make sure that the time for the safety requirement (closing the protective device again) is longer than the response time.

7.2 Switching on

The device performs a self-test after switching on. The safety outputs are switched off during this time. The green LED STATE then flashes with a frequency of 4 Hz and signals readiness for teaching-in an actuator (see "Teach-in", page 25).

The LED STATE flashes up to 3 times to indicate the number of teach-in operations that are still possible (see "System status", page 29).

The safety switch assumes normal operating state if the sensor detects an already taught-in actuator.

► If the device does not respond when the supply voltage is connected (e.g. green LED STATE does not flash), return the device to the manufacturer unopened.

7.3 Teach-in

DANGER
Bypassing the protective device

The dangerous state may not be stopped in the event of non-compliance.

► Document teaching-in of an actuator.
► During regular thorough checks, make sure that the taught-in actuator is still being used.

An actuator must be taught in during commissioning. It is possible to teach in up to 8 actuators in succession. Only the most recently taught-in actuator is valid. Actuators that have already been taught in cannot be taught in again.

During a teach-in operation, the safety outputs and application diagnostic output OUT are LOW, i.e. the system is in a safe condition.

Teaching-in the first actuator (delivery condition)

1. Switch on supply voltage for sensor.
   The green LED flashes rapidly (approx. 4 Hz).
2. Move actuator towards sensor (pay attention to distance < S_{ao}). The teach-in process starts, the green LED flashes slowly (approx. 1 Hz).
3. The teach-in process is completed after 60 seconds. The green LED goes out.
4. In order to activate the taught-in code of the actuator in the sensor, the supply voltage at the sensor must then be switched off for at least 3 seconds and then switched back on again.
5. Check the effectiveness of the protective device.

NOTE

The teach-in process is invalid if it is canceled before the green LED goes out, e.g. by interrupting the voltage supply at the sensor or by removing the actuator from the response range of the sensor.

The sensor switches to safe fault state, the LED OUT/ERROR lights up red (see "System status", page 29).

Teaching-in a new actuator

The T4000 Compact transponder safety switch can be operated only with the actuator that was last taught in.

When a new actuator is taught in, the sensor blocks the code of the last actuator The latter cannot be taught in again immediately when a renewed teach-in operation is performed. The blocked code is deleted again in the sensor only after a third code has been taught in.

1. Switch on supply voltage for sensor.
2. Move new actuator towards sensor (pay attention to distance < S_{ao}). The teach-in process starts. The green LED STATE flashes slowly (approx. 1 Hz).
3. The teach-in process is completed after 60 seconds. The green LED goes out.
4. Switch off the supply voltage at the sensor for at least 3 seconds and then switch back on again.

✓ This stores the new code and the old code is deactivated.

5. Check the effectiveness of the protective device.

NOTE

- The safety switch assumes normal operating state if the sensor detects an already taught-in actuator.
- If eight actuators have already been taught in, the code of the eighth actuator remains active.
- If the code of the direct predecessor is detected, the code of the previous actuator remains active.
- The teach-in process is invalid if it is canceled before the green LED goes out, e.g. by interrupting the voltage supply at the sensor or by removing the actuator from the response range of the sensor.
  The sensor switches to safe fault state, the LED ERROR lights up (see "System status", page 29).

7.4 Thorough check

Requirements for the thorough check during commissioning and in certain situations

The protective device and its application must be thoroughly checked in the following situations:

- Before commissioning
- After changes to the configuration or the safety function
- After changes to the mounting, the alignment, or the electrical connection
- After exceptional events, such as after a manipulation has been detected, after modification of the machine, or after replacing components

The thorough check ensures the following:

- All relevant regulations are complied with and the protective device is active for all of the machine's operating modes.
- The documentation corresponds to the state of the machine, including the protective device

The thorough checks must be carried out by qualified safety personnel or specially qualified and authorized personnel and must be documented in a traceable manner.

- ► Check whether the protective device of the machine is effective in all operating modes in which the machine can be set.
- ► Make sure that operating personnel have been instructed in the function of the protective device before starting work on the machine. The machine operator has overall responsibility for the instruction, which must be carried out by qualified personnel.

8 Troubleshooting

8.1 Safety

DANGER
Hazard due to lack of effectiveness of the protective device

In the case of non-compliance, it is possible that the dangerous state of the machine may not be stopped or not stopped in a timely manner.

- ► Immediately shut the machine down if the behavior of the machine cannot be clearly identified.
- ► If a machine fault cannot be definitively determined or safely rectified, immediately shut the machine down.
- ► Secure the machine so that it cannot switch on unintentionally.

DANGER
Hazard due to unexpected starting of the machine

- ► When any work is taking place, use the protective device to secure the machine or to ensure that the machine is not switched on unintentionally.

DANGER
Hazard due to lack of effectiveness of the protective device

In the case of non-compliance, it is possible that the dangerous state of the machine may not be stopped or not stopped in a timely manner.

- ► Do not carry out any repairs on the device components.
- ► Do not modify or manipulate device components.
- ► Apart from during the procedures described in this document, the device components must not be opened.

NOTE
If you cannot remedy the fault with the help of the information provided in this chapter, please contact your respective SICK subsidiary.

8.2 LED status indicators

Table 6: Meaning of LED indicators

	LED indication	Meaning
STATE	● Green	Normal mode
	☀ Green	Teach-in process (for other signal function, see System status)
OUT/ERROR	● Yellow	Valid actuator detected at sensors
	● Red	Internal electronics fault, EMC fault, invalid teach-in process

8.3 System status

Table 7: System status and displays

				LED indication		Status
	Actuator/door position	Safety output LA and LB	STATE (green)	OUT/ERROR (yellow)	OUT/ERROR (red)	
Normal mode	Closed	On	●	●	○	Normal mode, guard closed
	Open	Off	●	○	○	Normal mode, guard open
Commissioning	Open	Off	☀ 4 Hz	○	○	First commissioning after delivery Sensor is ready for teaching in the actuator
	Closed	Off	☀ 1 Hz (60 s)	○	○	Teach-in process
	Closed	Off	○	○	○	Positive acknowledgment after successful teach-in. In order to activate the taught-in code of the actuator in the sensor, the supply voltage at the sensor must be switched off for at least 3 seconds and then switched back on again.
Status indication	x	Off	☀ 3×+ ●	○	○	Indication after 1st to 5th Teach-in process
	x	Off	☀ 2× + ●	○	○	Display of the still permitted teach-in operations after the 6th Teach-in process
	x	Off	☀ 1× + ●	○	○	Display of the still permitted teach-in operations after the 7th Teach-in process
	x	Off	○	○	○	Device cannot perform another teach-in process
Operating error	Closed	Off	☀ 1×	○	●	Inadmissible 9th Teach-in process
	Closed	Off	☀ 2×	○	●	Inadmissible teach-in process for an old actuator
	Closed	Off	☀ 3×	○	●	Negative acknowledgment for teach-in process. Actuator was held in front of the read head for less than 60 s.
Fault indication	x	Off	○	○	●	Possible causes: • Internal device component failure • Actuator in the response range for less than 0.5 s. • Inadmissibly high external interference (EMC) • Short circuit or external voltage at safety output LA/LB

Meaning of symbols:

○ = LED off

● = LED lit

☀ = LED flashing

☀ 3× + ● = LED flashes three times then lights up continuously

x = Any status

NOTE
Displays other than those described here indicate an internal device fault. In this case, please contact your SICK subsidiary.

In most cases, a fault can be reset by opening and closing the guard for at least 2 seconds in each case.

If the fault is still displayed after this, carry out a hardware reset or briefly disconnect the device from the voltage supply.

Contact the manufacturer if the fault also cannot be reset by restarting the device.

9 Maintenance

9.1 Safety

DANGER
Damage to a device component

Risk of ineffectiveness of the protective device

In the event of damage, the whole safety component must be replaced. Replacement of individual parts of a safety component is not permitted.

No maintenance is required.

All repair work on the device must be carried out by the manufacturer.

9.2 Cleaning

NOTICE

- ► Do not use aggressive cleaning agents.
- ► Do not use any substances that hinder the wetting properties of lacquers.
- ► We recommend anti-static cleaning agents.

9.3 Regular thorough check

The safety switch must be checked regularly. The type and frequency of thorough checks is defined by the machine manufacturer and operating entity, see "Thorough check concept", page 16.

The regular thorough checks serve to investigate the effectiveness of the safety switch and detect any ineffectiveness due to modifications or external influences (e.g., damage or manipulation).

- ► Carry out the thorough checks according to the instructions from the machine manufacturer and operating entity.

9.4 Thorough check of the safety function

DANGER
Error in installation and thorough check

Risk of ineffectiveness of the protective device

Danger of death or serious injury

- ► Before carrying out the thorough check, make sure that there is no one inside the hazardous area.
- ► Observe the applicable accident prevention regulations.

A complete thorough check of the safety function must be carried out after installation and after every fault.

1. Switch on the supply voltage.
   - The machine must not start independently.
   - The safety switch carries out a self-test.
   - The green LED STATE flashes up to 3 times at approx. 4 Hz.
   - The green LED STATE then lights up continuously.
   - The LED OUT/ERROR is off.
2. Close all guards.

- The machine must not start independently.
- The green LED STATE lights up continuously.
- The LED OUT/ERROR lights up yellow.

3. Enable operation in the controller.
4. Open guard.
   - The machine must switch off and must not let itself be started as long as the guard is open.
   - The green LED STATE lights up continuously.
   - The LED OUT/ERROR is off.
5. Repeat the thorough check for each protective device individually as from the second step.

10 Decommissioning

10.1 Disposal

Approach

► Always dispose of unusable devices in accordance with national waste disposal regulations.

Complementary information

SICK will be glad to help you dispose of these devices on request.

11 Technical data

11.1 Sensor T4000-2DRNAC

Table 8: Safety-related characteristic data of sensor T4000-2DRNAC

Safety-related characteristic data			
	Minimum	**Typical**	**Maximum**
Performance level [1]	PL e (ISO 13849-1)		
Category	Category 3 (ISO 13849-1)		
PFH_D (mean probability of a dangerous failure per hour) [2]	4.29×10^{-8}		
T_M (mission time) [2]	20 years		
Type	Type 4 (ISO 14119)		
Actuator coding level	High coding level (ISO 14119)		
Diagnostic coverage DC	90 %		
$MTTF_D$ (mean time to dangerous failure)	100 years		

1) For detailed information on the safety configuration of your machine/system, please consult your SICK subsidiary.
2) At maximum switching load.

Table 9: Technical data of sensor T4000-2DRNAC

Parameter			
	Minimum	**Typical**	**Maximum**
Housing material	Plastic PBT V0 GF30		
Dimensions	Acc. to IEC 60947-5-2 (see "Dimensional drawings", page 37)		
Weight	0.4 kg		
Ambient temperature at U_B = 24 V DC	–20 °C	–	+55 °C
Enclosure rating	IP67 (IEC 60529)		
Protection class	III, contamination level 3		
Installation position	Any		
Connection type	M12 plug connector, 8-pin		
Supply voltage U_B (reverse polarity protected, regulated, residual ripple > 5 %)	18 V DC	24 V DC	27 V DC
For approval in accordance with cULus	Operation only with UL Class 2 voltage supply		
Current consumption	80 mA		
Switching load in accordance with cULus	DC 24 V Class 2		
External fuse protection (supply voltage)	0.25 A	–	8 A
Voltage supply for load U(LA), U(LB)	18 V DC		27 V DC
Safety outputs (LA/LB) (2 semiconductor outputs, p-switching, short-circuit protected, galvanically isolated) Output voltage U(LA)/U(LB)			

Parameter			
	Minimum	Typical	Maximum
HIGH U(LA) HIGH U(LB) LOW U(LA)/U(LB)	U_B–1.5 V DC U_B–1.5 V DC 0 V DC	– – –	U_B V DC U_B V DC 1 V DC
Switching current per safety output	1 mA	–	400 mA
External fuse protection (U(+LA)/ U(+LB), safety circuits)			400 mA medium time-lag
Utilization category [1]	DC-13 24 V 400 mA (IEC 60947-5-2)		
Application diagnostic output (OUT, semiconductor output, p-switching, short-circuit protected)			
Output voltage Load capability	0.8 × U_B V DC –	– –	U_B V DC 20 mA
Rated insulation voltage U_i	–	–	75 V DC
Rated impulse withstand voltage U_{imp}	–	–	1.5 kV
Conditional rated short-circuit current	100 A		
Vibration resistance	In accordance with IEC 60947-5-2		
Discrepancy time of both safety outputs	–	–	120 ms
Response time [2]	–	–	180 ms
Time delay before availability [3]	–	–	3 s
Power-up delay	–	–	400 ms
Dwell time [4]	0.5 s	–	–
Switching frequency	–	–	1 Hz
Repeatability R in accordance with IEC 60947-5-3	≤ 10 %		
Mounting distance between two read heads or two actuators	80 mm	–	–
EMC protection requirements	In accordance with IEC 60947-5-3		

1) Outputs must be protected for inductive loads with a suitable suppressor.
2) Maximum switch-off delay of the safety outputs after removing the actuator.
3) After the supply voltage has been switched on, the semiconductor outputs are switched off and the application diagnostic outputs are at LOW potential during the time delay before availability.
4) The dwell time of an actuator inside and outside the response range must be at least 0.5 s in order to ensure reliable detection of internal faults in the sensor (self-monitoring).

11.2 T4000-1KBA actuator

11.2.1 Typical response range

Table 10: Typical response range of T4000-1KBA actuator

Parameter			
	Minimum	Typical	Maximum
Response range with center offset m = 0 [1]			
Assured switch-off distance S_{ar} Switch-on distance Assured switch-on distance S_{ao} Switching hysteresis With side approach direction	– – 18 mm 2 mm –	– 20 mm – 3 mm 4 mm	40 mm – – – –

1) The values apply to non-flush mounting of the actuator.

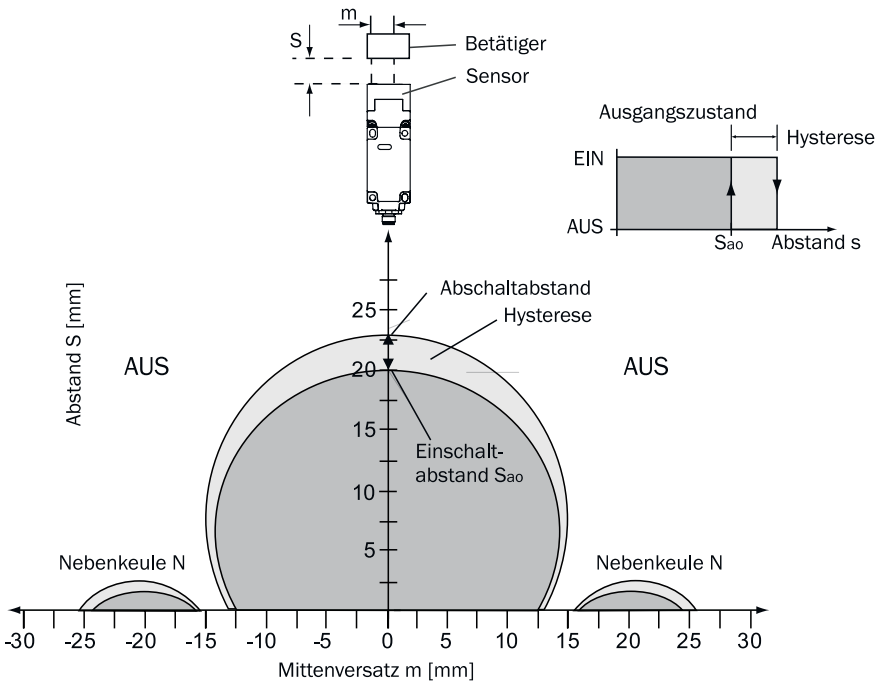

Figure 10: Typical response range (only in combination with actuator T4000-1KBA)

NOTE
A minimum distance of S = 4 mm must be observed between the actuator and sensor for a side approach direction in order to avoid entering the response range of the side lobes.

11.2.2 Technical data

Table 11: Technical data of actuator T4000-1KBA

Parameter			
	Minimum	**Typical**	**Maximum**
Housing material	Fortron, fiberglass-reinforced thermoplastic, encapsulated		
Dimensions	42 × 25 × 12 mm^3		
Weight	0.02 kg		
Ambient temperature	–25 °C	–	+70 °C
Enclosure rating	IP67/IP69k		
Installation position	Sensing face opposite sensor		
Dwell time [1)]	0.5 s	–	–

1) The dwell time is the time in which the actuator must be located inside or outside the response range.

11.3 T4000-1KBQ actuator

11.3.1 Typical response range

Table 12: Typical response range of T4000-1KBQ actuator

Parameter			
	Minimum	**Typical**	**Maximum**
Response range with center offset m = 0			

Parameter			
	Minimum	**Typical**	**Maximum**
Assured switch-off distance S_{ar}	–	–	58 mm
Switch-on distance [1]	–	22 mm	–
Assured switch-on distance S_{ao}	15 mm	–	–
Switching hysteresis	1 mm	2 mm	–
With side approach direction	–	6 mm	–

[1] The values apply to non-flush mounting of the actuator on aluminum. The typical switch-on distance increases to 30 mm in a metal-free environment.

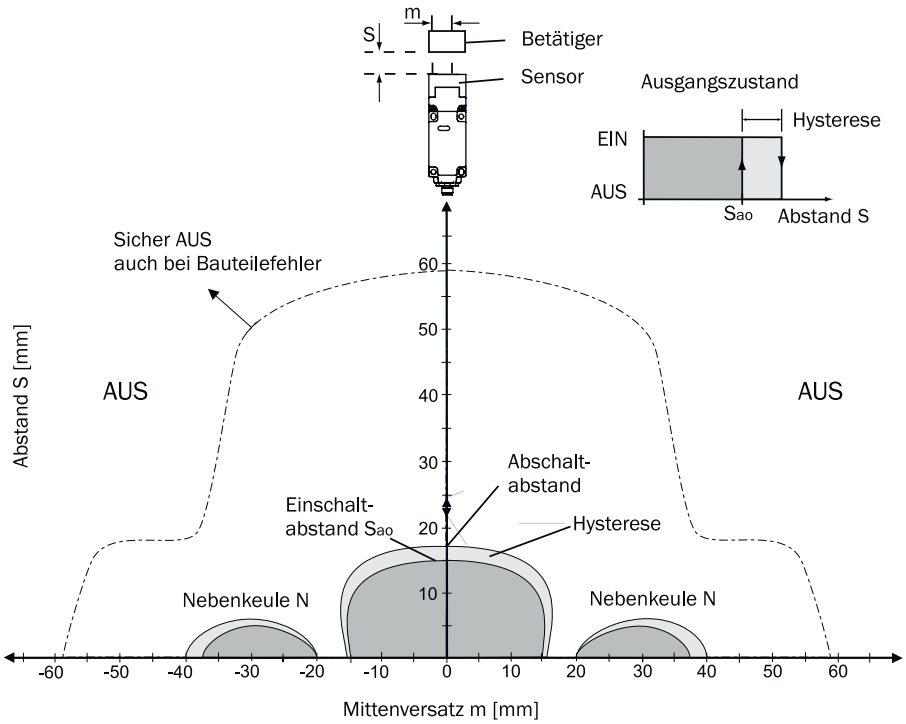

Figure 11: Typical response range (only in combination with actuator T4000-1KBQ)

NOTE
A minimum distance of S = 6 mm must be observed between the actuator and sensor for a side approach direction in order to avoid entering the response range of the side lobes.

11.3.2 Technical data

Table 13: Technical data of actuator T4000-1KBQ

Parameter			
	Minimum	**Typical**	**Maximum**
Housing material	PBT		
Dimensions	40 × 40 × 10 mm^3		
Weight	0.025 kg		
Ambient temperature	–25 °C	–	+70 °C
Enclosure rating	IP67/IP69k		
Installation position	Sensing face opposite sensor		

Parameter			
	Minimum	Typical	Maximum
Dwell time [1]	0.5 s	–	–

[1] The dwell time is the time in which the actuator must be located inside or outside the response range.

11.4 Dimensional drawings

Sensor T4000-2DRNAC

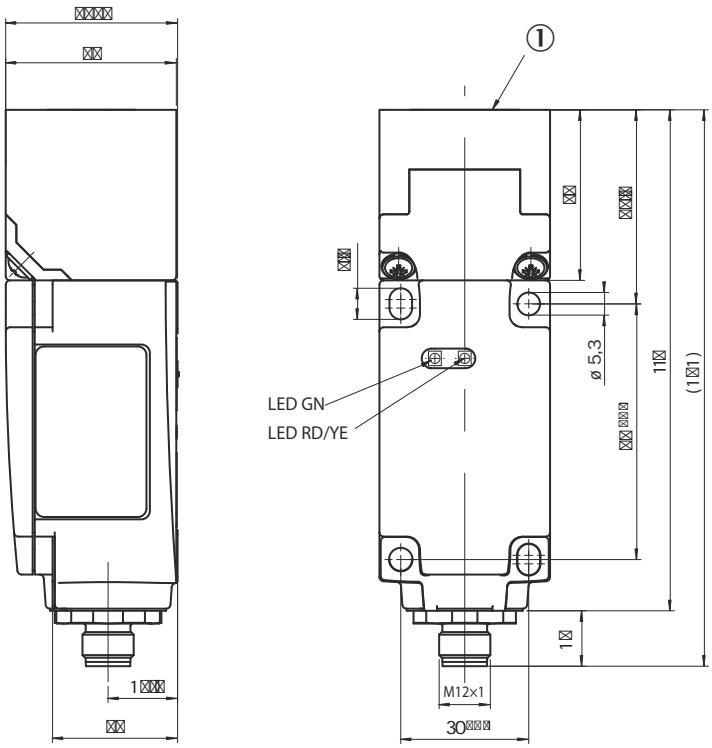

Figure 12: Dimensional drawing of sensor T4000-2DRNAC (mm)

① Sensing face

T4000-1KBA actuator

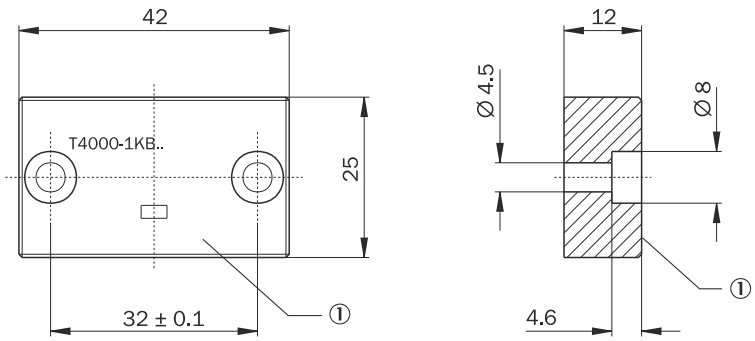

Figure 13: Dimensional drawing of actuator T4000-1KBA (mm)

① Sensing face

T4000-1KBQ actuator

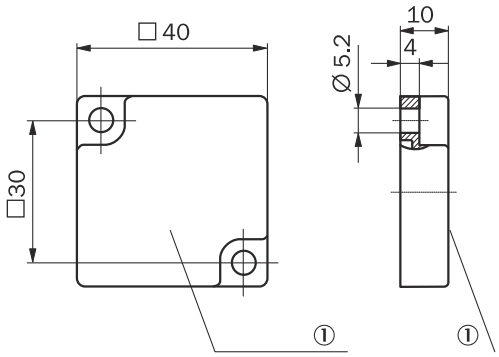

Figure 14: Dimensional drawing of actuator T4000-1KBQ (mm)

① Sensing face

12 Ordering information

12.1 Devices

Table 14: Device part numbers

Part	Description	Part number
T4000-2DRNAC	Sensor	6022052
T4000-1KBA	Actuator, cuboid	5306531
T4000-1KBQ	Actuator, square	5311153

NOTE
Two safety screws are included in the scope of delivery of actuators T4000-1KBA and T4000-1KBQ.

12.2 Accessories

Table 15: Accessories part numbers

Part	Device type	Part number
DOL-1208-G05MA	Connecting cable 5 m, straight male connector	6020993
DOL-1208-G10MA	Connecting cable 10 m, straight male connector	6022152
DOL-1208-G15MA	Connecting cable 15 m, straight male connector	6022153
DOL-1208-G30MA	Connecting cable 30 m, straight male connector	6022242
	Safety screws M4×14, 20 pcs	5309170

13 Annex

13.1 Conformities and certificates

You can obtain declarations of conformity, certificates and the current documentation for the product at www.sick.com. To do so, enter the product part number in the search field (part number: see the entry in the “P/N” or “Ident. no.” field on the type label).

13.1.1 EU declaration of conformity

Excerpt

The undersigned, representing the manufacturer, herewith declares that the product is in conformity with the provisions of the following EU directive(s) (including all applicable amendments), and that the standards and/or technical specifications stated in the EU declaration of conformity have been used as a basis for this.

- ROHS DIRECTIVE 2011/65/EU
- MACHINERY DIRECTIVE 2006/42/EC
- RE DIRECTIVE 2014/53/EU

13.1.2 UK declaration of conformity

Excerpt

The undersigned, representing the following manufacturer herewith declares that this declaration of conformity is issued under the sole responsibility of the manufacturer. The product of this declaration is in conformity with the provisions of the following relevant UK Statutory Instruments (including all applicable amendments), and the respective standards and/or technical specifications have been used as a basis.

- Restriction of the Use of Certain Hazardous Substances in Electrical and Electronic Equipment Regulations 2012
- Supply of Machinery (Safety) Regulations 2008
- Radio Equipment Regulations 2017

14 List of figures

1. Components of the T4000 Compact transponder safety switch....9
2. Dual-channel and isolated connection of the safety outputs....13
3. Switching behavior....14
4. Connection example....15
5. Change in sensing range when installed flush....19
6. Minimum distance when several safety switches are mounted....19
7. Changing the approach direction....20
8. Changing the approach direction....21
9. Device connection (male connector M12×8)....23
10. Typical response range (only in combination with actuator T4000-1KBA)....35
11. Typical response range (only in combination with actuator T4000-1KBQ)....36
12. Dimensional drawing of sensor T4000-2DRNAC (mm)....37
13. Dimensional drawing of actuator T4000-1KBA (mm)....37
14. Dimensional drawing of actuator T4000-1KBQ (mm)....38

15 List of tables

1. Target groups and selected chapters of these operating instructions.....5
2. Switching behavior of application diagnostic output.....14
3. Connection example for T4000 Compact connection to FPLC.....16
4. Device connection pin assignment (male connector M12x8).....23
5. Voltage drop depending on switching current and cable length..... 24
6. Meaning of LED indicators.....28
7. System status and displays.....29
8. Safety-related characteristic data of sensor T4000-2DRNAC..... 33
9. Technical data of sensor T4000-2DRNAC..... 33
10. Typical response range of T4000-1KBA actuator.....34
11. Technical data of actuator T4000-1KBA.....35
12. Typical response range of T4000-1KBQ actuator..... 35
13. Technical data of actuator T4000-1KBQ..... 36
14. Device part numbers.....39
15. Accessories part numbers..... 39

8022726/1PKG/2024-10-02/en

Australia
Phone +61 (3) 9457 0600
1800 33 48 02 – tollfree
E-Mail sales@sick.com.au

Austria
Phone +43 (0) 2236 62288-0
E-Mail office@sick.at

Belgium/Luxembourg
Phone +32 (0) 2 466 55 66
E-Mail info@sick.be

Brazil
Phone +55 11 3215-4900
E-Mail comercial@sick.com.br

Canada
Phone +1 905.771.1444
E-Mail cs.canada@sick.com

Czech Republic
Phone +420 234 719 500
E-Mail sick@sick.cz

Chile
Phone +56 (2) 2274 7430
E-Mail chile@sick.com

China
Phone +86 20 2882 3600
E-Mail info.china@sick.net.cn

Denmark
Phone +45 45 82 64 00
E-Mail sick@sick.dk

Finland
Phone +358-9-25 15 800
E-Mail sick@sick.fi

France
Phone +33 1 64 62 35 00
E-Mail info@sick.fr

Germany
Phone +49 (0) 2 11 53 010
E-Mail info@sick.de

Greece
Phone +30 210 6825100
E-Mail office@sick.com.gr

Hong Kong
Phone +852 2153 6300
E-Mail ghk@sick.com.hk

Hungary
Phone +36 1 371 2680
E-Mail ertekesites@sick.hu

India
Phone +91-22-6119 8900
E-Mail info@sick-india.com

Israel
Phone +972 97110 11
E-Mail info@sick-sensors.com

Italy
Phone +39 02 27 43 41
E-Mail info@sick.it

Japan
Phone +81 3 5309 2112
E-Mail support@sick.jp

Malaysia
Phone +603-8080 7425
E-Mail enquiry.my@sick.com

Mexico
Phone +52 (472) 748 9451
E-Mail mexico@sick.com

Netherlands
Phone +31 (0) 30 204 40 00
E-Mail info@sick.nl

New Zealand
Phone +64 9 415 0459
0800 222 278 – tollfree
E-Mail sales@sick.co.nz

Norway
Phone +47 67 81 50 00
E-Mail sick@sick.no

Poland
Phone +48 22 539 41 00
E-Mail info@sick.pl

Romania
Phone +40 356-17 11 20
E-Mail office@sick.ro

Singapore
Phone +65 6744 3732
E-Mail sales.gsg@sick.com

Slovakia
Phone +421 482 901 201
E-Mail mail@sick-sk.sk

Slovenia
Phone +386 591 78849
E-Mail office@sick.si

South Africa
Phone +27 10 060 0550
E-Mail info@sickautomation.co.za

South Korea
Phone +82 2 786 6321/4
E-Mail infokorea@sick.com

Spain
Phone +34 93 480 31 00
E-Mail info@sick.es

Sweden
Phone +46 10 110 10 00
E-Mail info@sick.se

Switzerland
Phone +41 41 619 29 39
E-Mail contact@sick.ch

Taiwan
Phone +886-2-2375-6288
E-Mail sales@sick.com.tw

Thailand
Phone +66 2 645 0009
E-Mail marcom.th@sick.com

Turkey
Phone +90 (216) 528 50 00
E-Mail info@sick.com.tr

United Arab Emirates
Phone +971 (0) 4 88 65 878
E-Mail contact@sick.ae

United Kingdom
Phone +44 (0)17278 31121
E-Mail info@sick.co.uk

USA
Phone +1 800.325.7425
E-Mail info@sick.com

Vietnam
Phone +65 6744 3732
E-Mail sales.gsg@sick.com

Detailed addresses and further locations at **www.sick.com**