DWG. NO. SD-50638-001

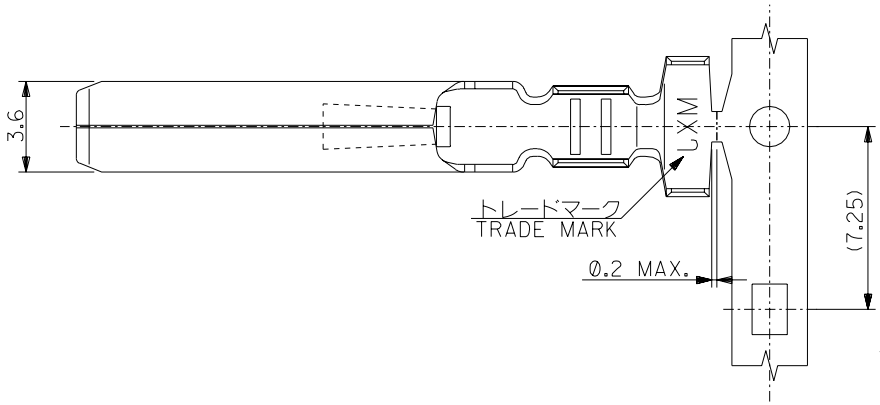

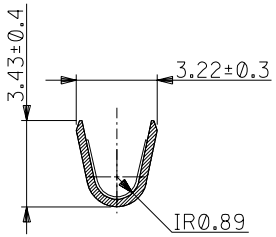

A-A

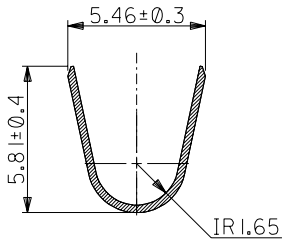

B-B

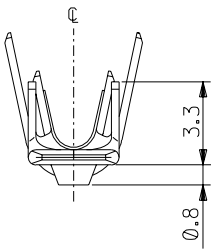

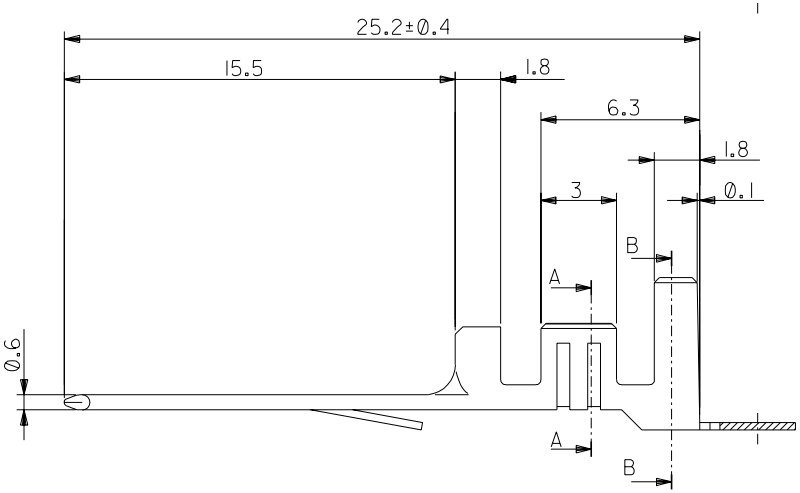

注)
NOTES;

1. 材質
MATERIAL
黄銅 (板厚:0.3)
BRASS (THICKNESS : 0.3)

2. メッキ仕様
TERMINAL PLATING
接点部 : 金メッキ 0.1μmMIN.
CONTACT AREA : GOLD 0.1 MICROMETER MINIMUM.
: パラジウムニッケルメッキ 0.6μmMIN.
PD-NI 0.6 MICROMETER MINIMUM.
圧着部 : 錫メッキ 1.0 μm MIN.
CRIMP AREA : TIN 1.0 MICROMETER MINIMUM.
下地メッキ : ニッケルメッキ 1.5μm MIN.
UNDER PLATE : NICKEL 1.5 MICROMETER MINIMUM.

3. 適用電線範囲:UL1015 , UL1865 , AWG #16~14
APPLICABLE WIRE RANGE : UL1015 , UL1865 , AWG #16~14

4. 被覆外径 : ø3.8MAX.
INSULATION EXTERNAL DIA : ø3.8MAX.

5. 50638-9028 は 50638-9049 の鉛フリー品である。
50638-9128 は 50638-9149 の鉛フリー品である。
50638-9028 IS LEAD FREE OF 50638-9049.
50638-9128 IS LEAD FREE OF 50638-9149.

バラ状 LOOSE	50638-9128
連鎖状 CHAIN	50638-9028
端子形状 TERMINAL CONFIGURATION	MATERIAL NO.

DO NOT SCALE DRAWING

284NO. DRWN: CH'K: APPR:	283NO. DRWN: CH'K: APPR:	282NO. DRWN: CH'K: APPR:	281NO. DRWN: CH'K: APPR:	新規作成 RELEASED 280NO.J20004-4129 DRWN:M.NAGATA '04/05/10 CH'K:K.TOJO '04/05/10 APPR:M.SASAO '04/05/10	0

DESCRIPTION: MATERIAL 材料 — FINISH 仕上げ — WIRE RANGE 適用電線範囲 — INS. RANGE 被覆外径 — REV

GENERAL TOLERANCES: (UNLESS SPECIFIED) 一般公差		
10 UNDER 未満		±0.2
10 OVER 以上 30 UNDER 未満		±0.25
30 OVER 以上		±0.3
ANGLE 角度		±3°

SCALE 5:1 | DESIGN UNITS ☒mm ☐INCH | THIRD ANGLE PROJECTION | DIMENSIONS: ☐mm/INCH ☐INCH/mm ☒mm ONLY | SHT | REV | REVISE ON CAD ONLY

DRAWN BY & DATE M.NAGATA '04/05/10
CHECKED BY & DATE K.TOJO '04/05/10
APPROVED BY & DATE M.SASAO '04/05/10

MODEL NO. 50638-****

TITLE: 2mm PITCH AC/DC CONN. PLUG CRIMP TERM. (MiI DRAWER CONNECTOR) -LEAD FREE-

molex MOLEX INCORPORATED

CAD FILENAME SD-50638-001.S01 | MATERIAL NO. SEE CHART | DRAWING NO. SD-50638-001 | SHEET NO. 1 OF 1

THIS DRAWING CONTAINS INFORMATION THAT IS PROPRIETARY TO MOLEX INCORPORATED AND SHOULD NOT BE USED WITHOUT WRITTEN PERMISSION.

SIZE B

EN-02J(097) MXJ-54