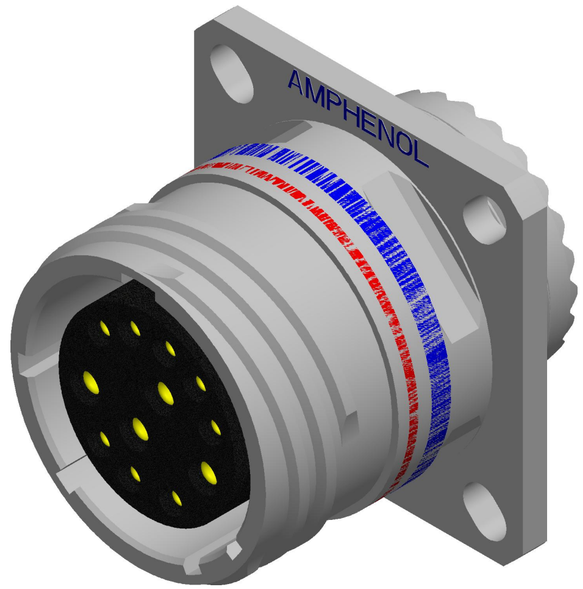

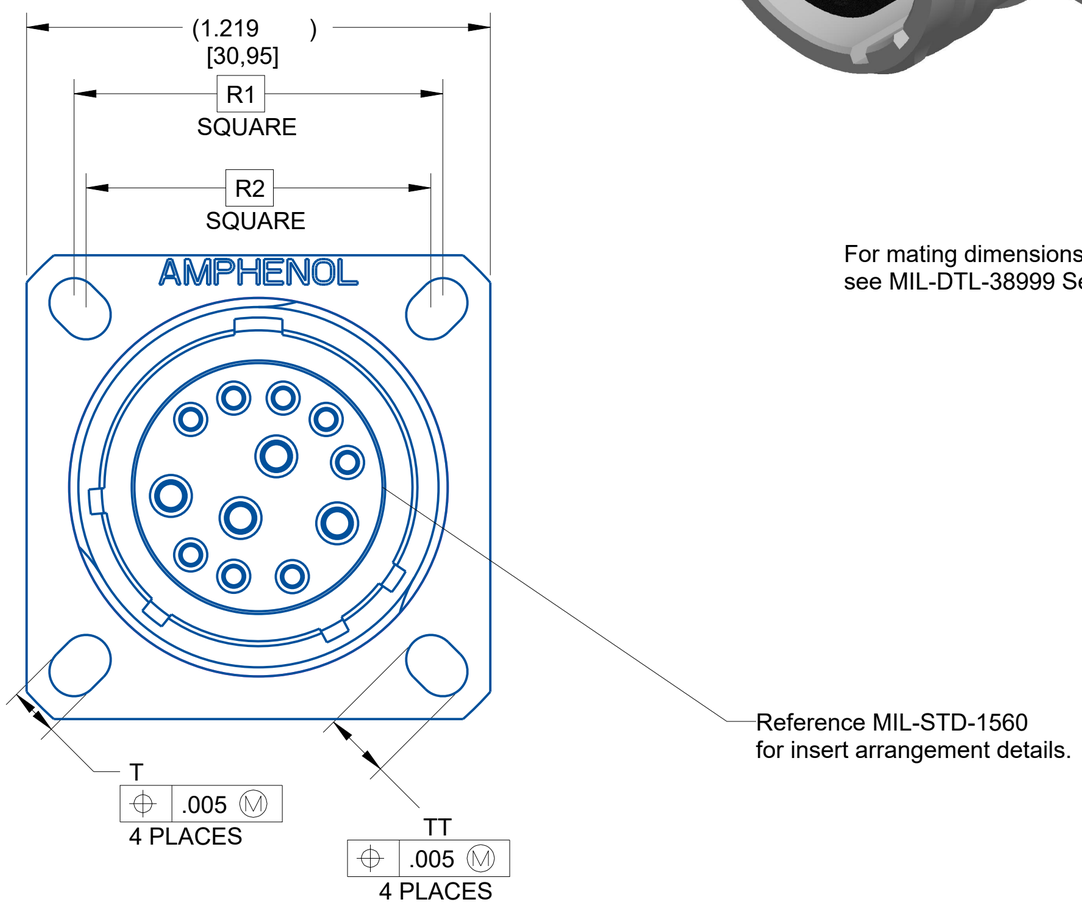

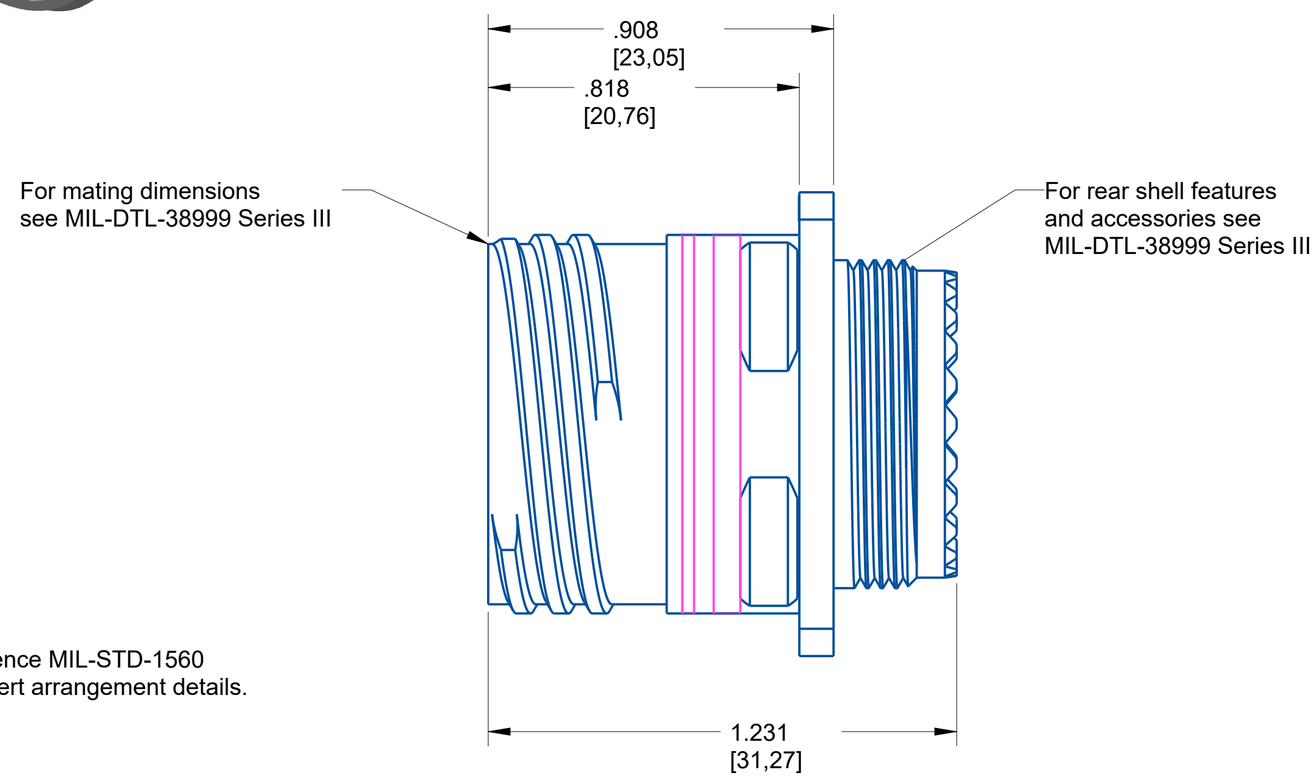

NOTE:
- -DRAWING NOT TO SCALE
- -DIMENSIONS SUBJECT TO CHANGE
- -DIMENSIONS ARE IN INCHES [MM]

PROPERTY OF AMPHENOL AEROSPACE. ALL RIGHTS RESERVED.

Meets requirements
of MIL-DTL-38999
Base Material: Composite
Plating: Electroless, Nickel

AMPHENOL CORPORATION
40-60 DELAWARE AVENUE
SIDNEY, N.Y. 13838

RECEPTACLE
Electrical Connector
D38999/20

U

SIZE	CAGE CODE	CODED NUMBER	REV
C	77820	D38999/20MD97SN	P1

SHEET 1 OF 1

Insert Arrangement

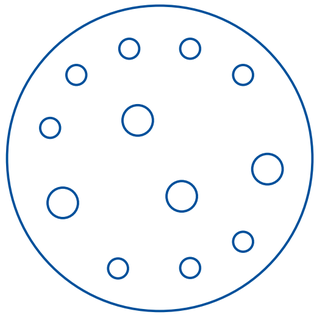

No. of Contacts	4	8
Contact Size	16	20
Wire Size	20, 18, 16	24, 22, 20

Shell Size	D
Arrangement	97
Service Rating	I
Test Current	(20)5 AMPS, (16)13 AMPS

NOTE:
- -DRAWING NOT TO SCALE
- -DIMENSIONS SUBJECT TO CHANGE
- -DIMENSIONS ARE IN INCHES [MM]

PROPERTY OF AMPHENOL AEROSPACE. ALL RIGHTS RESERVED.

AMPHENOL CORPORATION
40-60 DELAWARE AVENUE
SIDNEY, N.Y. 13838

RECEPTACLE U
Electrical Connector
D38999/20

SIZE	CAGE CODE	CODED NUMBER	REV
C	77820	D38999/20MD97SN	P1

SHEET 1 OF 1

4 3 2 1